TABLE OF CONTENTS

Section	Title
100	General
200	Overhead Distribution Basic Units
310	1Ø Distribution - Up to 2/0 ACSR
320	2Ø Distribution - Up to 2/0 ACSR
330	3Ø Distribution - Up to 397 AAC
340	3Ø Heavy Distribution - 795 AAC & 336 ACSR
350	Overhead Fiber Optic
400	Overhead Conductor
410	Overhead Secondary
500	Crossarms & Poles
600	Grounding
700	Guys & Anchors
800	Line Devices
900	Metering
1000	Streetlighting
1100	Overhead Transformers
1150	Clearances
1200	Underground General & Trenching
1300	Underground Risers, Cables & Connectors

TABLE OF CONTENTS
(CONTINUED)

Section	Title
1400	Underground Transformers
1500	Underground J-Boxes & Vaults
1600	1000 MCM Cable
1610	Vault Rooms
1700	Underground Secondary
1790	Transmission Basic Units
1800	Transmission
1910	Joint Use

100
GENERAL

2/11/2025

~	SC100	Standards Committee General Information
C	BEC	Bolted Electrical Connections

N New Standard
R Redrawn Standard
C Changed Standard
~ No Change

SECTION 100

GENERAL INFORMATION

1. Purpose of Construction Standards

   The purpose of Clark Public Utilities Construction Standards is to promote safe, economical, and uniform practices in the design, construction, and maintenance of CPU's electrical systems. Journey-level workers can safely operate and maintain a standard system because of familiarity with materials and equipment, and associated operating practices and ratings. Standards meet the applicable state and federal codes to ensure public safety.

2. Scope of Construction Standards

   The CPU Construction Standards provide information applicable to design and construction of the CPU transmission and distribution systems.

   CPU Standards are intended to cover the majority of typical installations. They do not cover every possible situation or "one of a kind" installations. The lack of a standard should not pose a problem if good engineering judgment and construction practices are followed.

3. Electrical Codes

   All design and construction practices shall meet the provisions of the Washington State Electrical Construction Code and the National Electrical Safety Code in so far as they are applicable. Nothing in these standards is intended to be interpreted so as to conflict with the regulations of the state of Washington or any other regulatory bodies having jurisdiction.

4. Use of Standards

   - Standards shall be adhered to on new construction.
   - Standards shall be complied with on rebuilding or maintenance. When such practice is impractical, or not economically feasible, changes or additions to the standard practice will be permissible.
   - Each department and each individual is expected to become familiar with those standards pertaining to their work and to adhere to those Standards. It is not the intent of standardization to, in any way, impede progress in adopting new ideas in materials, methods, or designs. On the contrary, it is expected that standardization will stimulate the use of such ideas, and through a program of trial use, incorporate into CPU standards those items which improve design and construction practices.

Rev 1: Deleted text for RIO system, corrected grammatical errors and updated language.

5. Deviation from Standards

When deviations from the CPU Standards are deemed necessary, the individual responsible for the deviations must provide good reasons and make the changes only with the approval of their supervisor. The Standards Engineer shall be notified of any deviations from the standards that are expected to be repetitive.

While it is desirable that standards be adhered to as much as possible, it is also recognized that items of material and methods of assembly and construction become obsolete because of improvements, developments of new materials, or economic reasons. New and/or better methods of performing work are constantly being derived.

6. Responsibility

Responsibility for adherence to standards rests with the individual directly in charge of the work.

7. Cooperation

All department heads, as well as employees who use the standards in their work, are expected to give the standards program full cooperation and assistance and to help resolve problems that arise.

8. Continuous Improvement

The Constructions Standards program is flexible. Employees are urged to submit suggestions for improvements by either contacting the Standards Engineer or a member of the Standards Committee. Good reasons in support of the proposed change or new standard should be provided when submitting the suggestion. As a courtesy to the submitter, the Standards Committee will review all suggestions and provide a response to the individual originally providing the suggestion.

Rev 1: Deleted text for RIO system, corrected grammatical errors and updated language.

1. General

1.1 Bolted connections can be broken into three categories: aluminum-to-aluminum, aluminum-to-copper and copper-to-copper. Because of the difference in thermal expansion between aluminum and copper alloys, bronze bolts must not be used on aluminum connections and aluminum bolts must not be used on copper connections. Type 304 stainless steel bolts used in conjunction with stainless steel flat and Belleville washers are suitable for all three types of connections and are the recommended standard bolt assembly for connections on CPU's electrical system.

1.2 Galvanized bolts, nuts and lock washers shall not be used in making electrical connections. When subjected to short circuit currents and resultant heat, the galvanizing tends to flow from under the threads, reducing the strength of the connection.

1.3 Aluminum bolts shall not be reused after they have been torqued.

1.4 To determine minimum bolt length, add 7/8" (for nut and washers) to the thickness of the terminals to be bolted together.

1.5 Install bolt heads down whenever possible. This will help identify loose bolt connections because they will be visible from ground level.

2. Bolted Flat Connections

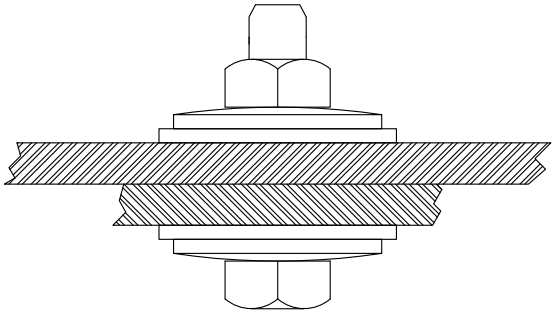

2.1 File away burrs and ridges to reduce corona.

2.2 Remove oxide coatings by wire brushing all contact surfaces of the connectors until they are like new. Do not wire brush tin-plated or silver-plated contact surfaces.

2.3 Immediately apply a coat of inhibitor to the contact surfaces. Wire brush all of the bolted surfaces through the inhibitor. Apply additional inhibitor. Do not remove the previously applied inhibitor.

2.4 Assemble the connection. Use 1/2" stainless steel bolt assemblies. Assemble the bolted connection as shown in the figure above. When connecting aluminum to copper, the aluminum terminal must be placed above the copper terminal to prevent copper salts from eroding the aluminum.

2.5 Tighten the bolts alternately and evenly until the Belleville washers are flat then back off until the Bellevilles start to unflatten (about 1/16 of a turn). Refer to the following table for recommended torque values.

Recommended Torque Values for Commonly Used Bolts

		Stainless Steel 304 or Silicon Bronze		Aluminum 6061 - T6	
Bolt Size - Threads/In	**Condition of Threads**	**Inch-lb**	**Foot-lb**	**Inch-lb**	**Foot-lb**
3/8" - 16	Dry	240	20	180	15
	Lubricated	180	15	180	15
1/2" - 13	Dry	480	40	360	30
	Lubricated	360	30	300	25
5/8" - 11	Dry	840	70	720	60
	Lubricated	600	50	480	40
3/4" - 10	Dry	1200	100	1140	95
	Lubricated	1020	85	720	60
7/8" - 9	Dry	1800	150	1560	130
	Lubricated	1440	120	900	75
1" - 8	Dry	2400	200	1920	160
	Lubricated	1920	160	1140	95

3.0 Application of Tension for Bolt Clamping

For bolted electrical connections it is necessary to have adequate clamping pressure which is obtained by the correct application of tension to the bolts at the assembly.

There are several ways to achieve the proper tension to a bolt in critical applications. CPU has approved the following methods:

1. Use of torque wrench
2. Turn-of-the-nut method
3. Load indicating washers (Belleville washers)

Tension Measuring Method	% Accuracy	Relative Cost
Feel (Operator's Judgement)	+/- 35	1
*Torque Wrench	+/- 25	1.5
*Turn-of-the-Nut	+/- 15	3
*Load Indicating Washers	+/- 10	7
Fastener Elongation	+/- 3 to 5	15
Strain Gages	+/- 1	20

* CPU approved methods

3.1 Use of Torque Wrench

For proper tensioning of bolts, a torque wrench will be used to tighten a bolt by applying the appropriate torque value as given in the table "Recommended Torque Values for Commonly Used Bolts" on page 2.

3.2 Turn-of-the-Nut Method

The Industrial Fastener Institute has developed a means of properly tensioning structural steel bolting by what is known as the "Turn-of-the-Nut" method. This method applies only to bolts with UNC threads.

Turn-of-the-nut tightening process encompasses a low initial "threshhold" torque to achieve "snug tight" condition followed by a prescribed amount of nut turning to develop the required tension. This technique has gained acceptance for installation of high strength structural bolts and can be extrapolated down for reliable use on smaller fasteners as long as assumptions upon which the technique is based are considered. For instance, the ideal snug tight condition will vary with each application.

The Research Council for Structural Connections published *Specification for Structural Joints Using High-Strength Bolts* (2014) which recommends a turn count based on the length and diameter of the steel bolt in the connection. According to Table 8.2 in the RCSC specification, when installing a 1/2" bolt use 1/2 turns for lengths 2-4" and 2/3 turns for lengths 4-6".

3.3 Load Indicating Washers (Belleville Washers)

Not applicable to aluminum bolts. For non-aluminum bolts, Belleville spring washers and wide-series flat steel washers shall be used. Care shall be taken to install the Belleville washers with the crown up toward the nut or bolthead, with the concave side at the Belleville bearing on a heavy duty, wide-series flat washer with a larger diameter than the Belleville. Bellevilles shall be tightened to flat and then backed off 1/16 of a turn.

For proper tensioning of bolts, a Belleville washer will be used that has a load-to-flat value approximately equal to but not exceding 80% of the yield strength of the bolt.

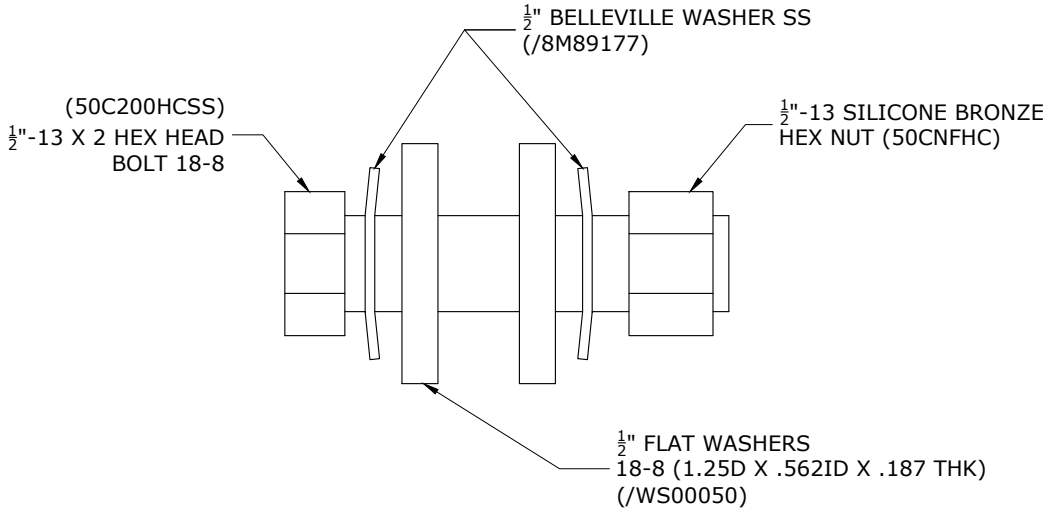

Rev. 1 - Added belleville washer drawing for clarity.

200
OVERHEAD DISTRIBUTION BASIC UNITS

2/11/2025

~	BR1	22" Multi-purpose Bracket with Clip & Insulator for Slack Span
~	BR3	22" Multi-purpose Bracket with Clip for Tension Span
~	BR10	1000MCM Cable Termination Mounting Bracket
~	CR20A	Single 8' Crossarm - Flat Brace
~	CR21A	Double 8' Crossarm - Flat Braces
C	CR23A,-B	Single Crossarm - Angle Brace
C	CR24A,-B	Double Crossarm - Angle Braces
~	CR26A,-B	Pre-assembled Deadend, 8' & 10', 3-Position - 397 AAC Max Wire
~	CR27B	Pre-assembled Deadend, 10', 4-Position - 397 AAC Max Wire
~	CR28A,-B	Pre-assembled Deadend, 8' & 10', 3-Position - 795 AAC Max Wire
~	CR29B	Pre-assembled Deadend, 10', 4-Position - 795 AAC Max Wire
~	CRA50A,-B	Single Crossarm - Alley Arm
~	CRA52A,-B	Double Crossarm - Alley Arm
~	PR1	Pole-Top Pin - Single Insulator
~	PR2	Pole-Top Pin - Double Insulators
~	PR4	Single Crossarm Pin
~	PR5	Single Crossarm Angle Pin
~	PR19	Double Crossarm Pin
~	PR20	Horizontal Jumper Support
~	PR21	Deadend with Eyebolt
~	PR22	Deadend with Long Eyebolt
~	PR23	Deadend with Extension
~	PR24	Deadend
~	PR25	Deadend with Extension

N New Standard
R Redrawn Standard
C Changed Standard
~ No Change

200 (CONTINUED)
OVERHEAD DISTRIBUTION BASIC UNITS

2/11/2025

~	PR40	Pole-Top Pin Single Vise-Top Insulator
~	PR41	Pole-Top Pin - Double Vise-Top Insulators
~	PR42	Single Vise-Top Insulator on Crossarm
~	PR43	Double Vise-Top Insulators on Crossarms
~	PR44	Single Angle Vise-Top Insulator on Crossarm
~	PR56	Single Clamp-Top Twiggy Arm 21"
~	PR57	Double Clamp-Top Twiggy Arm 21"
~	PR58	Single Clamp-Top Twiggy Arm 27"
~	PR59	Double Clamp-Top Twiggy Arm 27"
~	PR60	Single Twiggy Arm 18"
~	PR60V	Single Twiggy Arm 18" Vise-Top Insulator
~	PR61	Double Twiggy Arm 18"
~	PR61V	Double Twiggy Arm 18" Vise-Top Insulator
~	PR62	Single Twiggy Arm 24"
~	PR62V	Single Twiggy Arm 24" Vise-Top Insulator
~	PR63	Double Twiggy Arm 24"
~	PR63V	Double Twiggy Arm 24" Vise-Top Insulator
~	S1	Neutral Tangent Spool
~	S2	Neutral Angle Spool
~	S3	Heavy Neutral Angle Spool
~	S4,S4A	Slack Neutral Conductor Deadends
~	S10	Neutral Deadend
~	S11	Neutral Double Deadend
~	S12	Single White Neutral Insulator on Crossarm
~	S13	Double White Neutral Insulators on Crossarms
~	S14	Single Angled White Neutral Insulator on Crossarm

N	New Standard
R	Redrawn Standard
C	Changed Standard
~	No Change

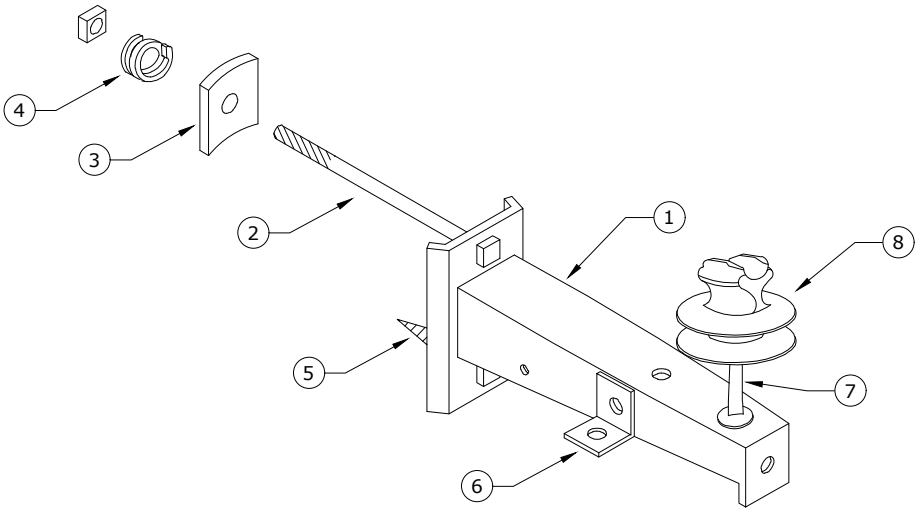

PREFORMED TIES	S/N
2/0 ACSR	2242
#2 ACSR	2241

Rev. 7 - Changed to Polymer insulator and updated material list.

ITEM NO.	DESCRIPTION	BR1 QTY.	BR1 S/N
1	Bracket, Steel, Galv., Multi-purpose, 22"	1	2262
2	Bolt, Machine, 5/8" x 16" Galv., 12,400 lbs Ultimate Tensile	1	157
3	Washer, Square, Curved, Cast, 3" x 3" x 3/8" Thick x 13/16" Hole	1	1392
4	Washer, Lock, Spring, Double Coil, Galv., 5/8"	1	2217
5	Screw, Lag, 1/2" x 4 1/2" Twist Drive, Drive Point ✡	1	1132
6	Adapter, Steel, Galv., Clip Angle ✡	1	2248
7	Pin, Insulator, Short Shank 6" Above Arm ✡	1	2249
8	Insulator, Pin, C Neck, Polymer	1	1968 ✡

Clark Public Utilities

CONSTRUCTION STANDARDS

BASIC UNITS
22" MULTI-PURPOSE BRACKET
WITH CLIP AND INSULATOR FOR SLACK SPAN

REVISIONS

R	DATE	ENGR	OPS
4	12/17/04	LB	AH
5	3/19/07	LB	AH
6	8/25/09	CM	AH
7	12/22/16	CM	DK

PAGE: 1 of 1

BR1

CAD FILE: BR1

APP: TRO
DATE: 7/17/96

SECTION 200

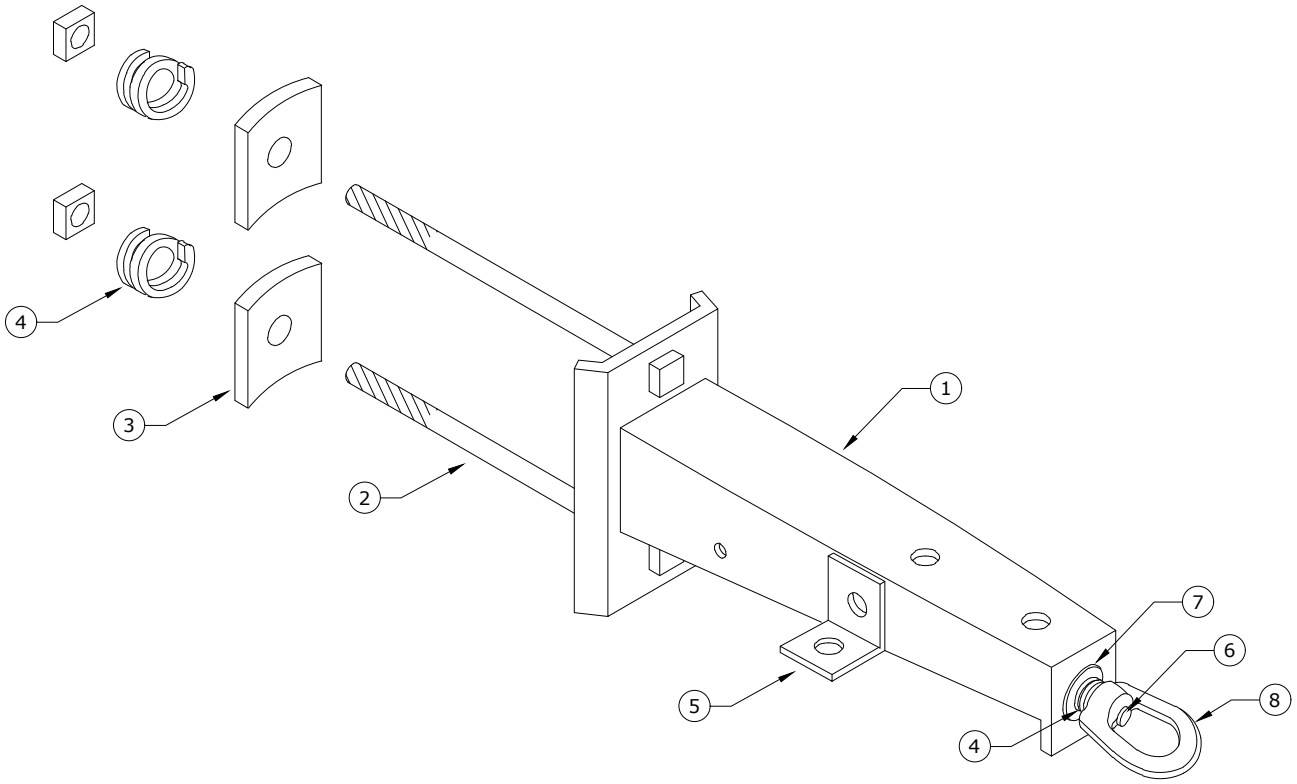

22"BRACKET

(MULTI-PURPOSE W/ CUTOUT CLIP)

Note: For tension applications.

Rev. 6 - Corrected material list and drawing.

ITEM NO.	DESCRIPTION	BR3 QTY.	BR3 S/N
1	Bracket, Steel, Galv., Multipurpose, 22"	1	2262
2	Bolt, Machine, 5/8" x 16" Galv., 12,400 lbs Ultimate Tensile	2 ✲	157
3	Washer, Square, Curved, Cast, 3" x 3" x 3/8" Thick x 13/16" Hole	2 ✲	1392
4	Washer, Lock, Spring, Double Coil, Galv., 5/8"	3 ✲	2217
5	Adapter, Steel, Galv., Clip Angle ✲	1	2248
6	Bolt, Machine, 5/8" x 2" Galv., 12,400 lbs Ultimate Tensile	1	149 ✲
7	Washer, Flat Round Galv. 5/8"	1	1395 ✲
8	Nut, Eye Oval 5/8" Galv.	1	913

Clark Public Utilities

CONSTRUCTION STANDARDS

BASIC UNITS
22" MULTI-PURPOSE BRACKET
WITH CLIP FOR TENSION SPAN

REVISIONS

R	DATE	ENGR	OPS
3	2/23/00	HWH	MA
4	12/17/04	LB	AH
5	10/17/08	CM	AH
6	11/11/16	KJP	

PAGE: 1 of 1

BR3

CAD FILE: BR3

APP: TRO

DATE: 7/17/96

SECTION 200

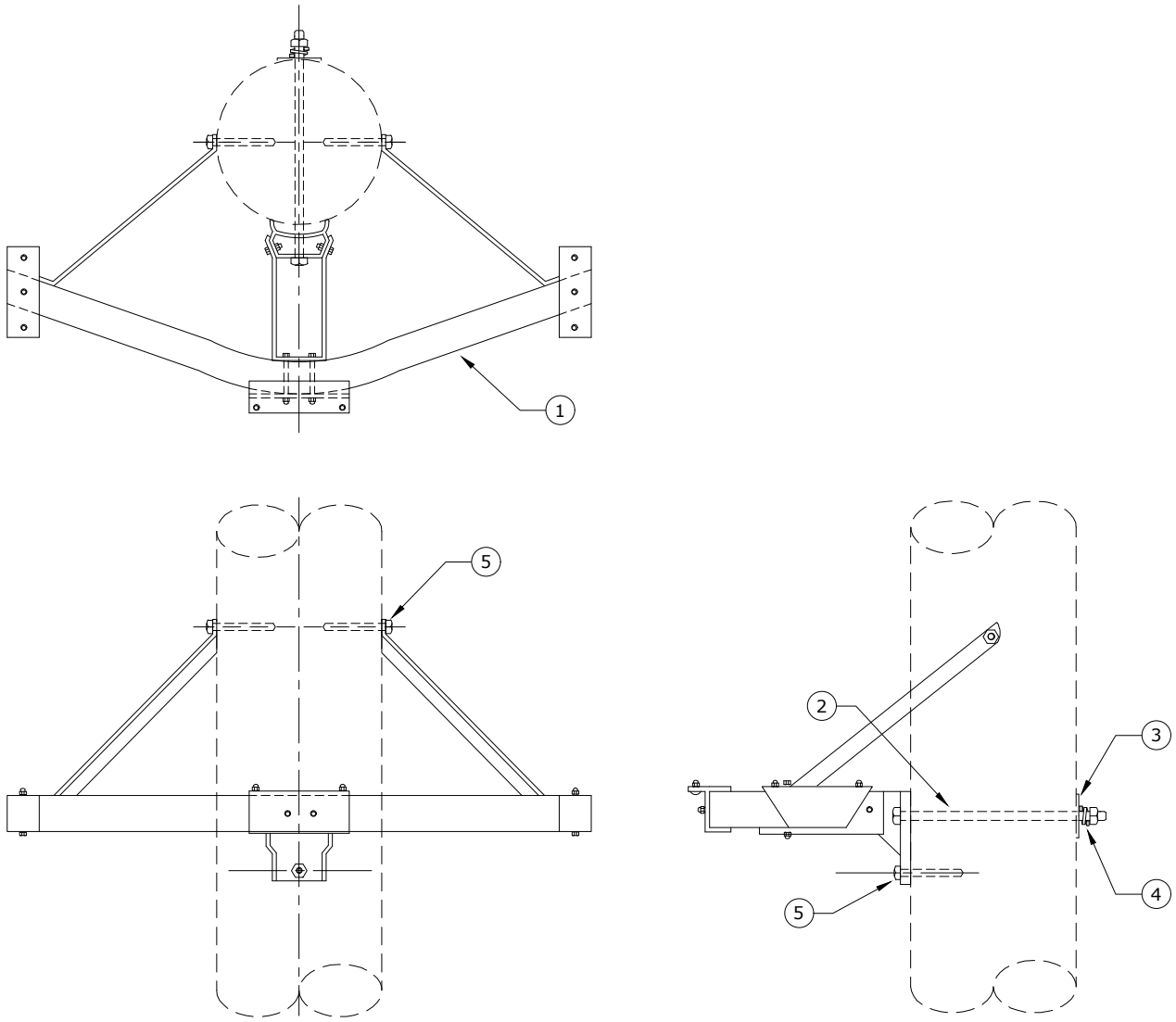

Rev. 2 - Changed to 48" bracket.

ITEM NO.	DESCRIPTION	BR10 QTY.	BR10 S/N
1	Bracket, Terminator Mount, 48", 1000 MCM ✲	1	2842 ✲
2	Bolt, Machine, 5/8" x 14", Galv., 12,400 lbs Ultimate Tensile ✲	1	156
3	Washer, Square, Curved, Cast, 3" x 3" x 3/8" Thick x 13/16" Hole	1	1392
4	Washer, Lock, Spring, Double Coil, Galv., 5/8" ✲	1	2217
5	Screw, Lag, 1/2" x 4 1/2", Twist Drive, Drive Point ✲	3	1132
6	Support, Cable, 1000 MCM ✲	3	2229

Clark Public Utilities

CONSTRUCTION STANDARDS

BASIC UNITS
1000MCM CABLE TERMINATION
MOUNTING BRACKET

REVISIONS

R	DATE	ENGR	OPS
1	10/7/05	LB	AH
2	2/22/16	KJP	

PAGE: 1 of 1

BR10

CAD FILE: BR10

APP: TRO
DATE: 7/17/96

SECTION 200

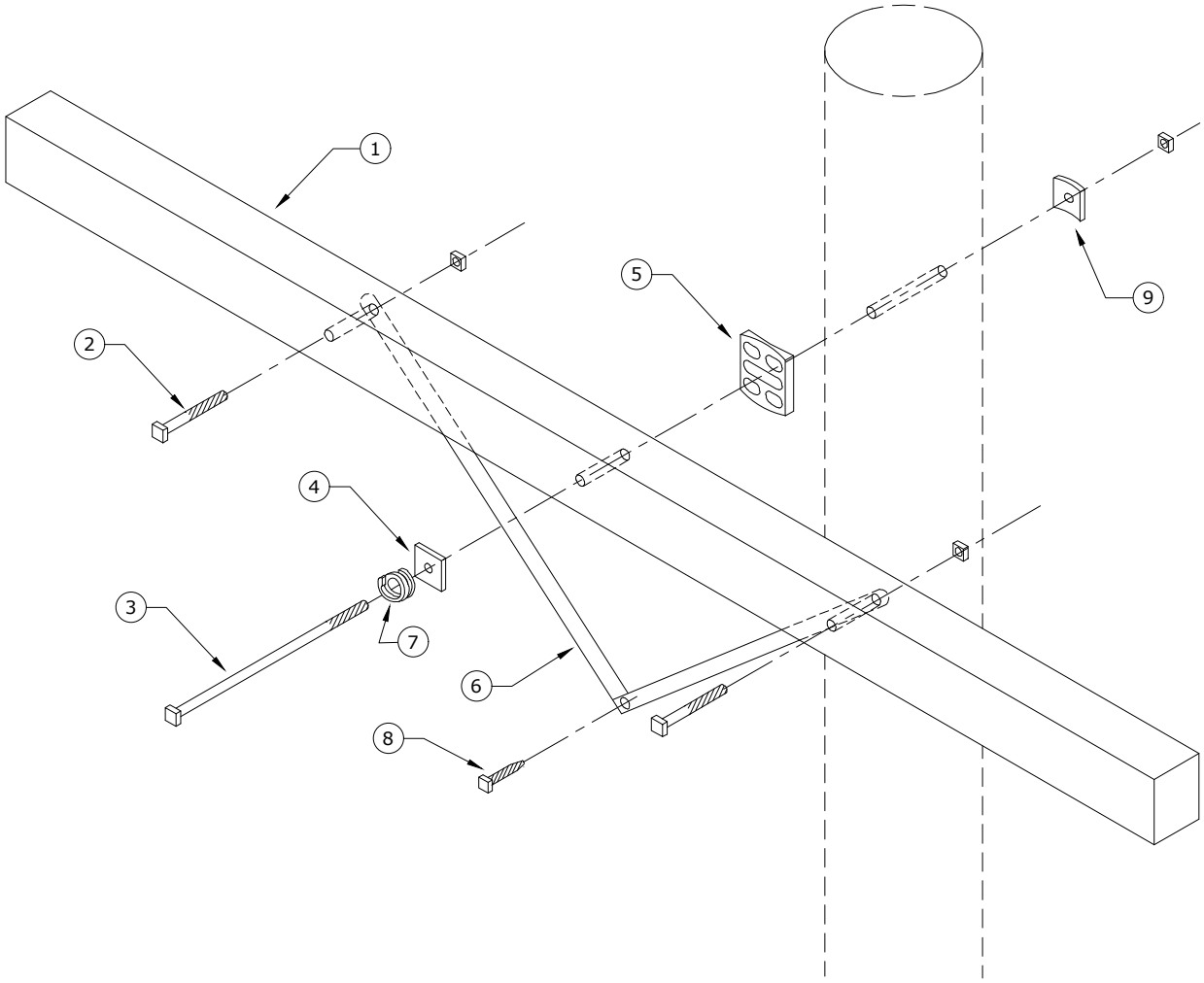

(FLAT BRACE)

Rev. 4 - Updated material.

ITEM NO.	DESCRIPTION	CR20A	
		QTY.	S/N
1	Arm, Cross (Distr.), 8' x 3 3/4" x 4 3/4"	1	25
2	Bolt, Carriage, 3/8" x 5", Galv., 4250 lbs Ultimate Tensile ✡	2	78
3	Bolt, Machine, 5/8" x 16", Galv., 12,400 lbs Ultimate Tensile ✡	1	157
4	Washer, Square, Flat 5/8", 2 1/4" x 2 1/4"	1	1412
5	Gain, Pole Plastic	1	709
6	Brace, Crossarm 28", Galv. Stl ✡	2	205
7	Washer, Lock, Spring, Double Coil, Galv., 5/8" ✡	1	2217
8	Screw, Lag 1/2" x 4 1/2", Twist Drive, Drive Point ✡	1	1132
9	Washer, Curved, Square, Cast, 3" x 3" x 3/8" Thick x 13/16" Hole	1	1392

Clark Public Utilities

CONSTRUCTION STANDARDS

BASIC UNITS
SINGLE 8' CROSSARM
FLAT BRACE

REVISIONS

R	DATE	ENGR	OPS
2	2/23/00	HWH	MA
3	10/7/05	LB	AH
4	2/24/16	KJP	

PAGE: 1 of 1

CR20A

CAD FILE: CR20

APP: ELM

DATE: 1/31/80

SECTION 200

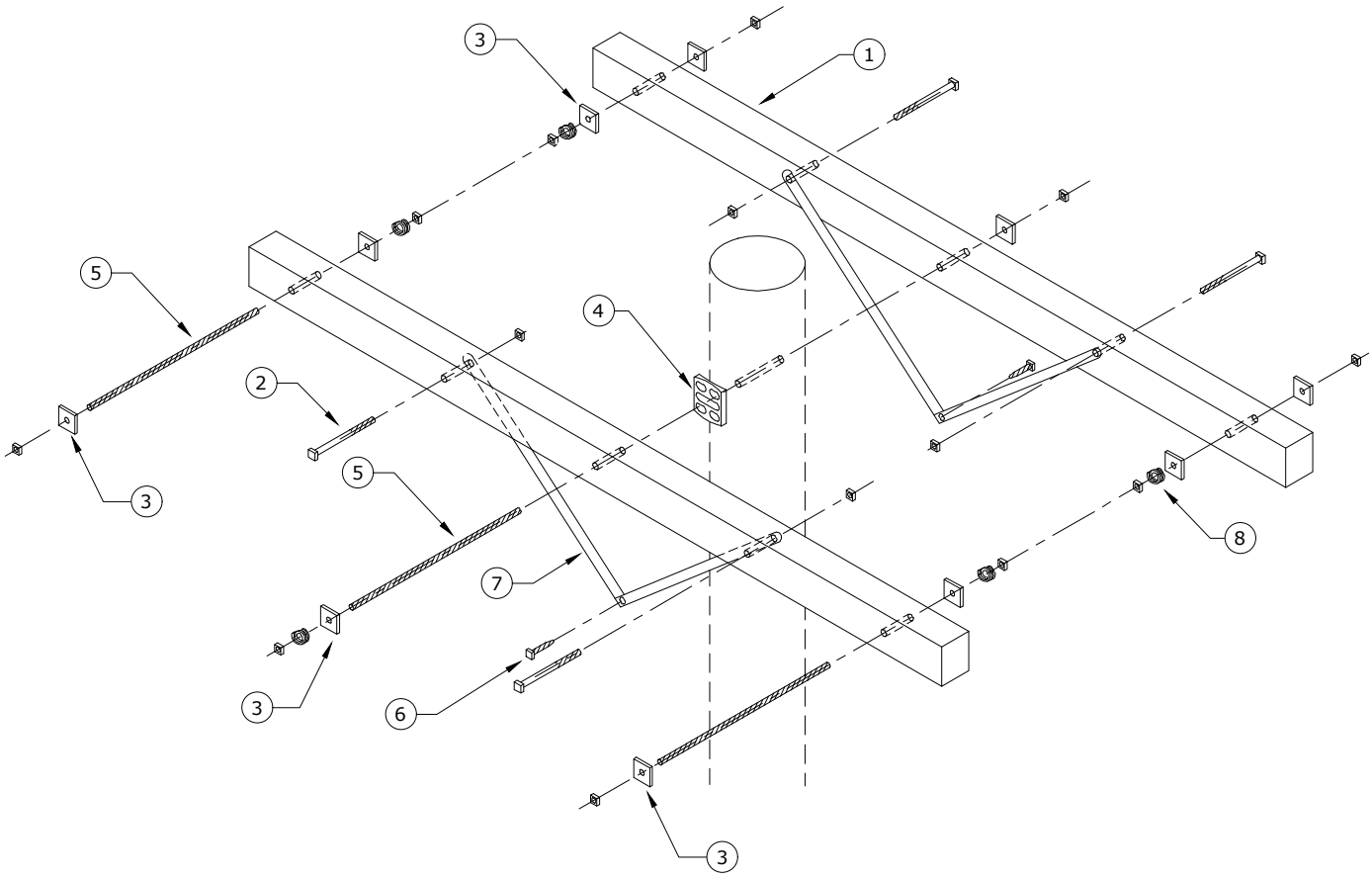

(FLAT BRACES)

Rev. 5 - Updated material.

ITEM NO.	DESCRIPTION	CR21A	
		QTY.	S/N
1	Arm, Cross (Distr.), 8' x 3 3/4" x 4 3/4"	2	25
2	Bolt, Carriage, 3/8" x 5", Galv., 4,250 lbs Ultimate Tensile ✲	4	78
3	Washer, Square, Flat 5/8", 2 1/4" x 2 1/4"	10	1412
4	Gain, Pole Plastic	1	709
5	Bolt, Double Arm, 5/8" x 20", Galv., 12,400 lbs Ultimate Tensile ✲	3	83
6	Screw, Lag 1/2" x 4 1/2", Twist Drive, Drive Point ✲	2	1132
7	Brace, Crossarm 28", Galv. Stl. ✲	4	205
8	Washer, Lock, Spring, Double Coil, Galv., 5/8" ✲	5	2217

Clark Public Utilities

CONSTRUCTION STANDARDS

BASIC UNITS
DOUBLE 8' CROSSARM
FLAT BRACES

REVISIONS

R	DATE	ENGR	OPS
2	2/23/00	HWH	MA
3	3/12/02	JEH	
4	9/19/05	LB	AH
5	2/24/16	KJP	

PAGE: 1 of 1

CR21A

CAD FILE: CR21

APP: ELM

DATE: 1/31/80

SECTION 200

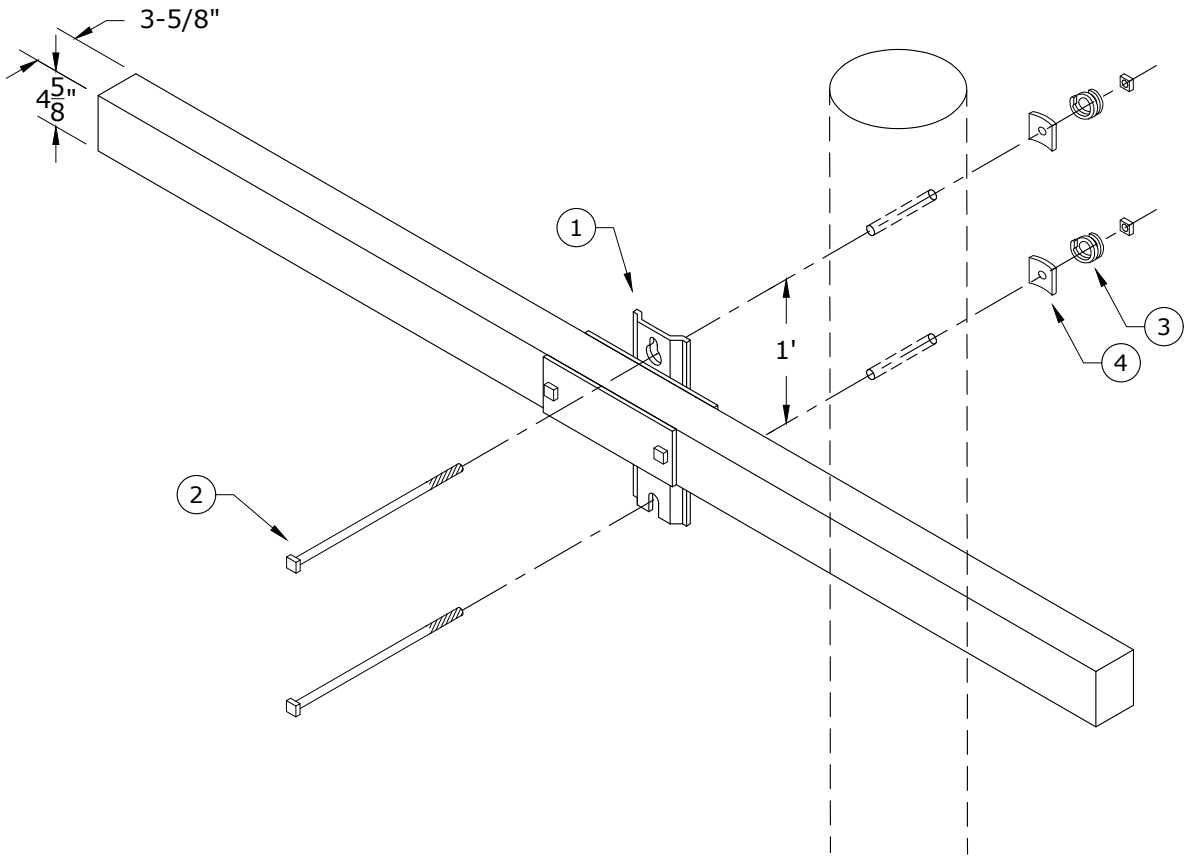

Rev. 5 - Changed to fiberglass crossarm.

ITEM NO	DESCRIPTION	8'Arm CR23A QTY	8'Arm CR23A S/N	10'Arm CR23B QTY	10'Arm CR23B S/N
1	Crossarm, Distribution, Fiberglass, 8'/10' Long x 3-5/8" Wide x 4-5/8" Tall	1	3030 ✲	1	3031 ✲
2	Bolt, Machine, 5/8" x 14", Galv, 12,400 lb Ultimate Tensile	2 ✲	156 ✲	2 ✲	156 ✲
3	Washer, Lock, Spring, Double Coil, Galv, 5/8"	2	2217	2	2217
4	Washer, Curved, Square, Cast, 3" x 3" x 3/8" Thick x 13/16" Hole	2	1392	2	1392

Clark Public Utilities

CONSTRUCTION STANDARDS

BASIC UNITS
SINGLE CROSSARM

REVISIONS

R	DATE	ENGR	OPS
2	2/23/00	HWH	MA
3	10/7/05	LB	AH
4	2/24/16	KJP	
5	2/11/25	CM	GM

PAGE: 1 of 1

CR23A,CR23B

CAD FILE: CR23

APP: ELM
DATE: 1/31/80

SECTION 200

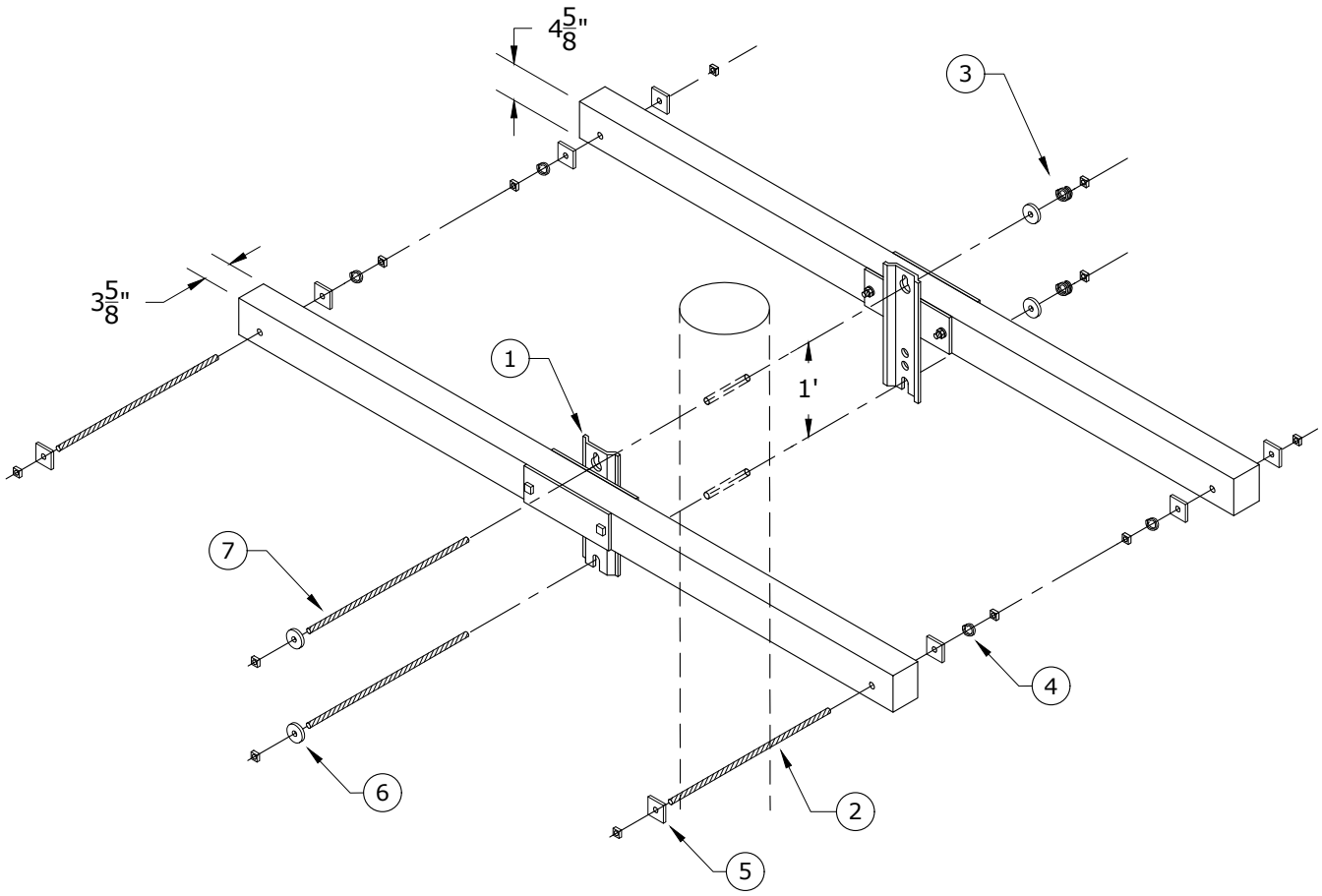

Rev. 6 - Changed to fiberglass arm.

ITEM NO	DESCRIPTION	8'Arm CR24A QTY	8'Arm CR24A S/N	10'Arm CR24B QTY	10'Arm CR24B S/N
1	Crossarm, Distribution, Fiberglass, 8'/10' Long x 3-5/8" Wide x 4-5/8" High	2	3030 ✲	2	3031 ✲
2	Bolt, Double, Arm, 5/8" x 20", Galv, 12,400 lb Ultimate Tensile	2 ✲	83	2 ✲	83
3	Washer, Lock, Spring, Double Coil, Galv, 5/8"	2	2217	2	2217
4	Washer, Lock, Spring, Single Coil, Galv, 5/8"	4	1403	4	1403
5	Washer, Square, Flat 5/8", 2 1/4" x 2 1/4"	8 ✲	1412	8 ✲	1412
6	Washer, Round, Flat, Glav, 5/8"	4	1395	4	1395
7	Bolt, Double, Arm, 5/8" x 16", Galv, 12,400 lb Ultimate Tensile	2 ✲	81 ✲	2 ✲	81 ✲

Clark Public Utilities

CONSTRUCTION STANDARDS

BASIC UNITS
DOUBLE CROSSARM

REVISIONS

R	DATE	ENGR	OPS
3	3/12/02	JEH	
4	5/3/06	LB	AH
5	2/24/16	KJP	
6	2/11/25	CM	GM

PAGE: 1 of 1

CR24A,CR24B

CAD FILE: xCR24

APP: ELM
DATE: 1/31/80

SECTION 200

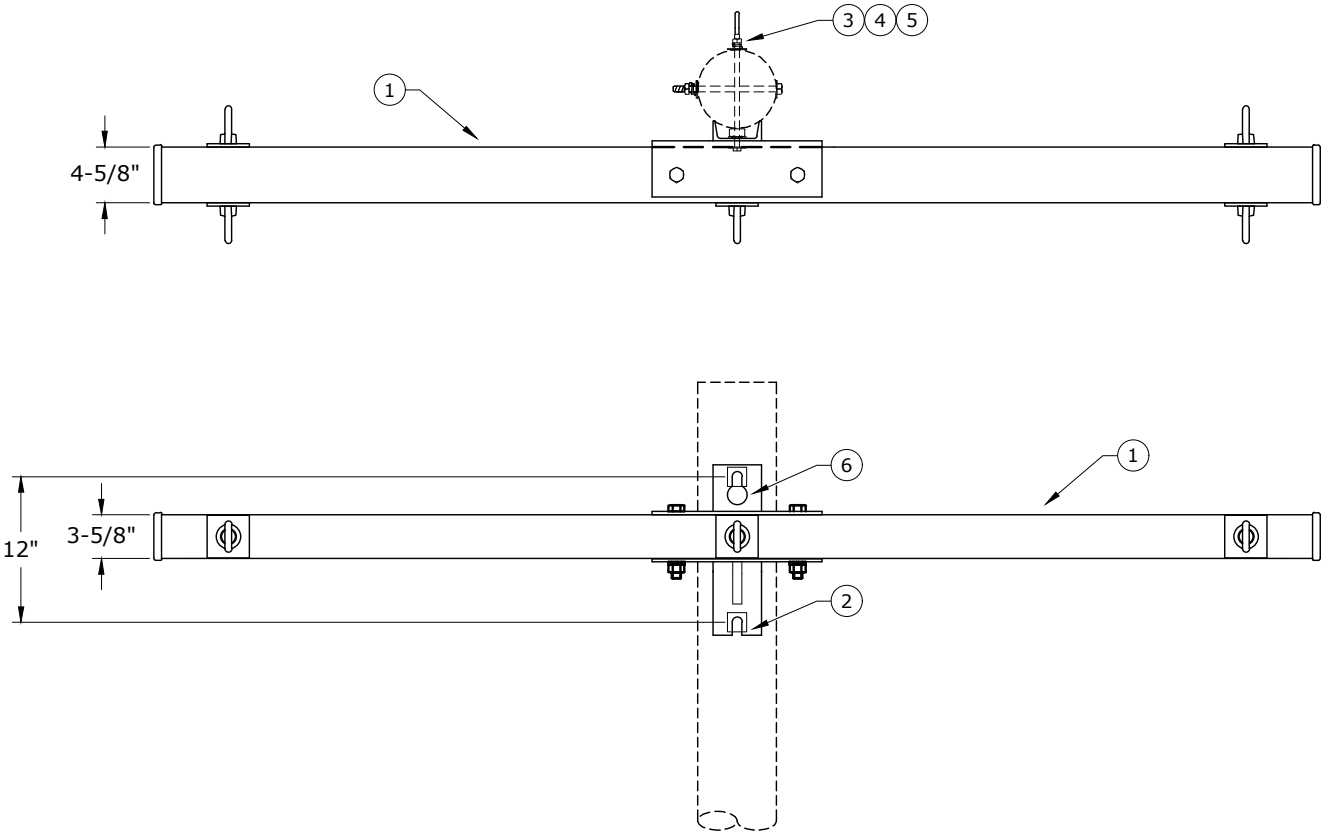

ULTIMATE DEADEND STRENGTH 8' and 10' 3-Position 7,120 lbs/position

Rev. 6 - Updated materials.

ITEM NO.	DESCRIPTION	8'Arm CR26A QTY.	8'Arm CR26A S/N	10'Arm CR26B QTY.	10'Arm CR26B S/N
1	Arm, Deadend Assembly, 3-position, 397 Max	1	2508	1	2680
2	Bolt, Machine, 3/4" x 14", Galv., 18,350 lbs Ultimate Tensile ✡	1	174	1	174
3	Washer, Lock, Spring, Double Coil, Galv., 3/4"	2	2218	2	2218
4	Washer, Curved, Square, Cast, 3" x 3" x 3/8" Thick x 13/16" Hole	2	1392	2	1392
5	Nut, Eye Oval 3/4"	1	914	1	914
6	Bolt, Machine, 3/4" x 16", Galv., 18,350 lbs Ultimate Tensile ✡	1	175	1	175

Clark Public Utilities

CONSTRUCTION STANDARDS

BASIC UNITS, PRE-ASSEMBLED DEADEND
8' AND 10', 3-POSITION
397 AAC MAX WIRE

REVISIONS

R	DATE	ENGR	OPS
3	3/12/02	JEH	
4	10/18/07	LB	AH
5	7/23/10	KJP	
6	2/24/16	KJP	

PAGE: 1 of 1

CR26A,CR26B

CAD FILE: CR26

APP: ELM

DATE: 1/31/80

SECTION 200

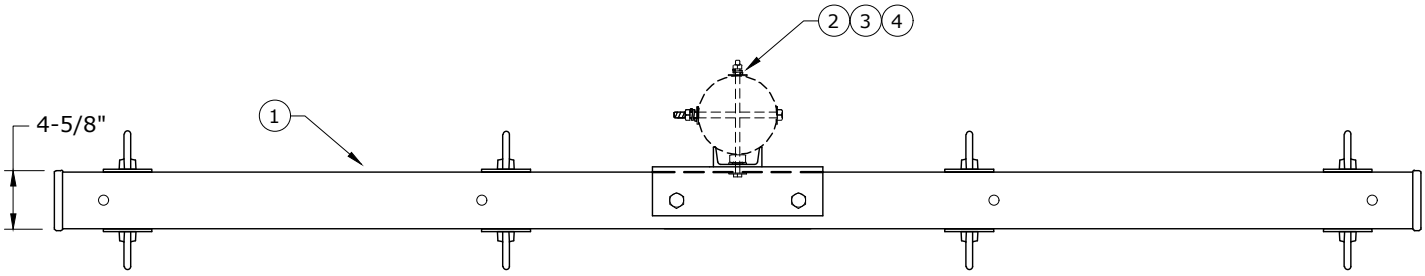

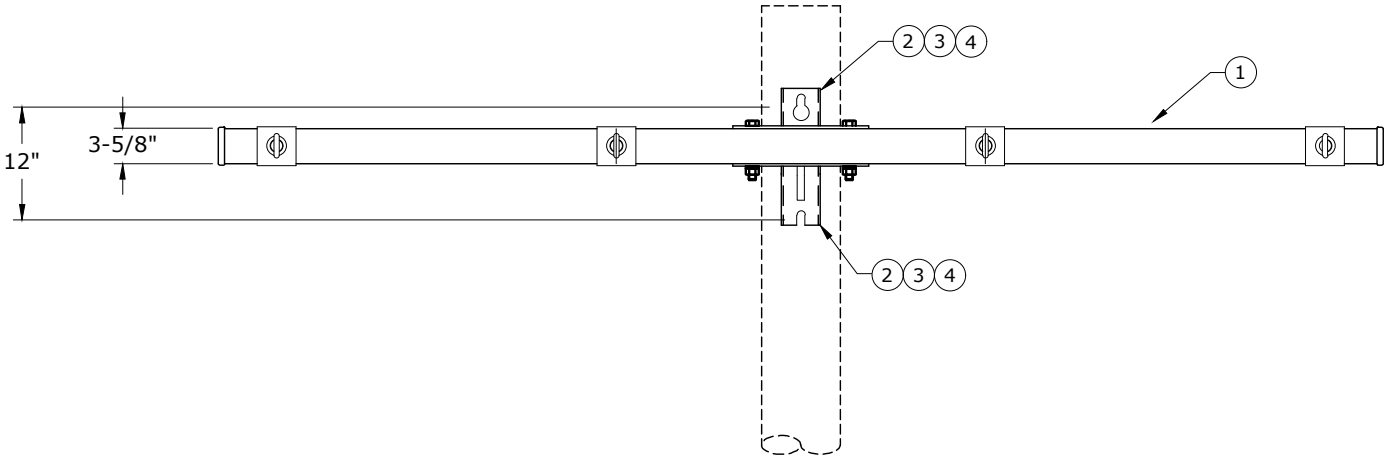

ULTIMATE DEADEND STRENGTH 10' 4-Position 13,900 lbs/position

Rev. 6 - Updated materials.

ITEM NO.	DESCRIPTION	CR27B QTY.	CR27B S/N
1	Arm, Deadend Assembly, 10', 4-position, 397 Max	1	2555
2	Bolt, Machine, 3/4" x 14", Galv., 18,350 lbs Ultimate Tensile ✡	2	174
3	Washer, Lock, Spring, Double Coil, Galv., 3/4"	2	2218
4	Washer, Curved, Square, Cast, 3" x 3" x 3/8" Thick x 13/16" Hole	2	1392

Clark Public Utilities

CONSTRUCTION STANDARDS

BASIC UNITS
PRE-ASSEMBLED DEADEND, 10', 4-POSITION
397 AAC MAX WIRE

REVISIONS

R	DATE	ENGR	OPS
3	3/12/02	JEH	
4	10/18/07	LB	AH
5	7/23/10	KJP	
6	2/24/16	KJP	

PAGE: 1 of 1

CR27B

CAD FILE: CR27

APP: ELM
DATE: 1/31/80

SECTION 200

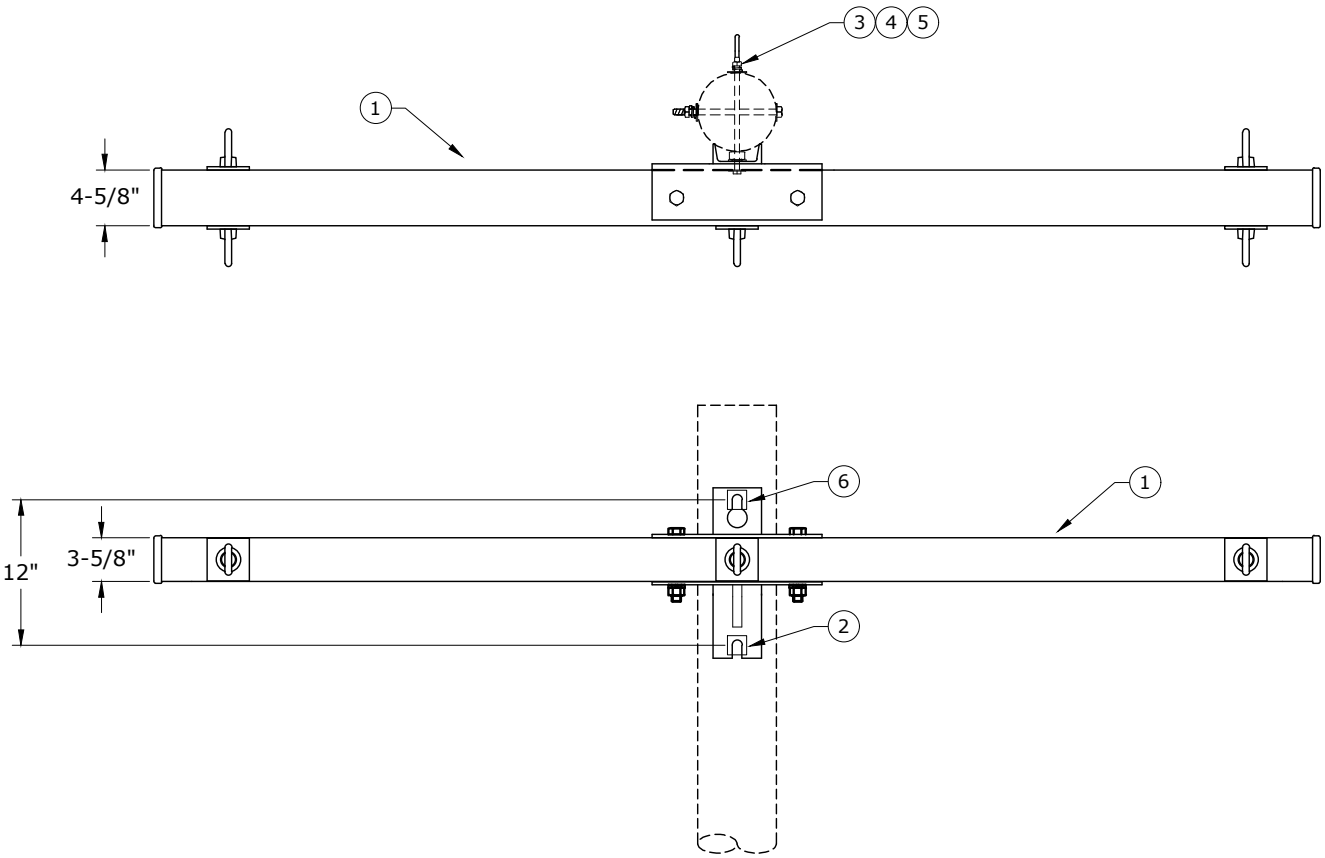

ULTIMATE DEADEND STRENGTH 8' and 10' 3-Position 13,900 lbs/position

Rev. 2 - Updated materials.

ITEM NO.	DESCRIPTION	8'Arm CR28A QTY.	8'Arm CR28A S/N	10'Arm CR28B QTY.	10'Arm CR28B S/N
1	Arm, Deadend Assembly, 3-position, 336 & 795	1	2509	1	2681
2	Bolt, Machine, 3/4" x 14", Galv., 18,350 lbs Ultimate Tensile ✡	1	174	1	174
3	Washer, Lock, Spring, Double Coil, Galv., 3/4"	2	2218	2	2218
4	Washer, Curved, Square, Cast, 3" x 3" x 3/8" Thick x 13/16" Hole	2	1392	2	1392
5	Nut, Eye Oval 3/4", Galv.	1	914	1	914
6	Bolt, Machine, 3/4" x 16", Galv., 18,350 lbs Ultimate Tensile ✡	1	175	1	175

Clark Public Utilities

CONSTRUCTION STANDARDS

BASIC UNITS, PRE-ASSEMBLED DEADEND
8' AND 10', 3-POSITION
795 AAC MAX WIRE

REVISIONS

R	DATE	ENGR	OPS
1	7/23/10	KJP	
2	2/24/16	KJP	

PAGE: 1 of 1

CR28A,CR28B

CAD FILE: CR28

APP: LB/AH
DATE: 10/18/07

SECTION 200

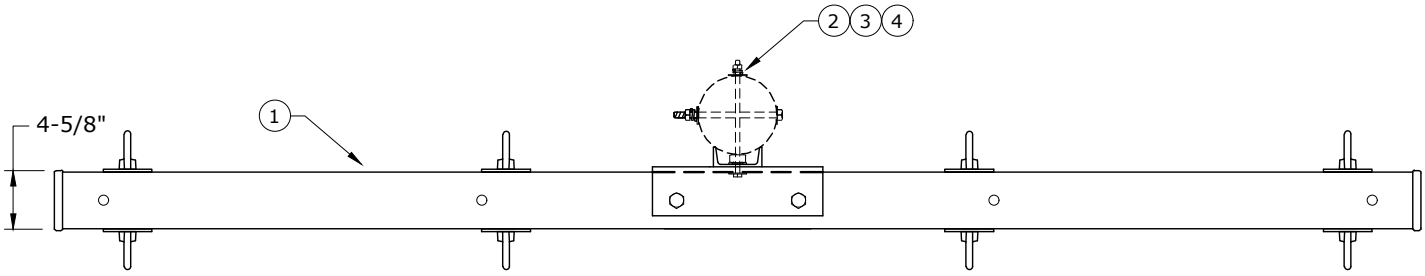

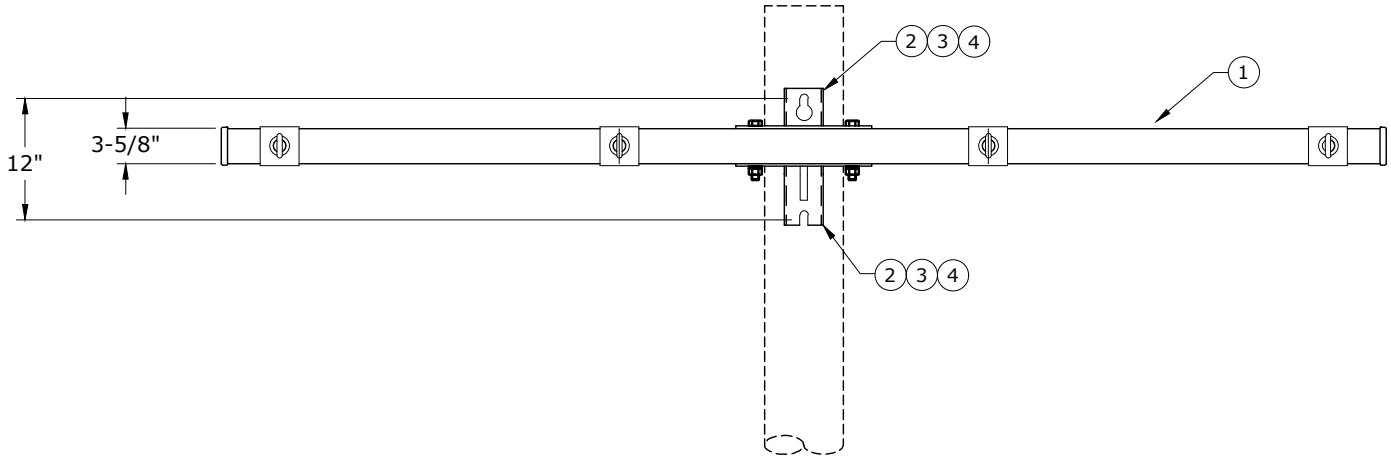

ULTIMATE DEADEND STRENGTH 10' 4-Position 13,900 lbs/position

Rev. 2 - Updated materials.

ITEM NO.	DESCRIPTION	CR29B QTY.	CR29B S/N
1	Arm, Deadend Assembly, 10', 4-position, 336 & 795	1	2668
2	Bolt, Machine, 3/4" x 14", Galv., 18,350 lbs Ultimate Tensile ✡	2	174
3	Washer, Lock, Spring, Double Coil, Galv., 3/4"	2	2218
4	Washer, Curved, Square, Cast, 3" x 3" x 3/8" Thick x 13/16" Hole	2	1392

Clark Public Utilities

CONSTRUCTION STANDARDS

BASIC UNITS
PRE-ASSEMBLED DEADEND, 10', 4-POSITION
795 AAC MAX WIRE

REVISIONS

R	DATE	ENGR	OPS
1	7/23/10	KJP	
2	2/24/16	KJP	

PAGE: 1 of 1

CR29B

CAD FILE: CR29

APP: LB/AH

DATE: 10/18/07

SECTION 200

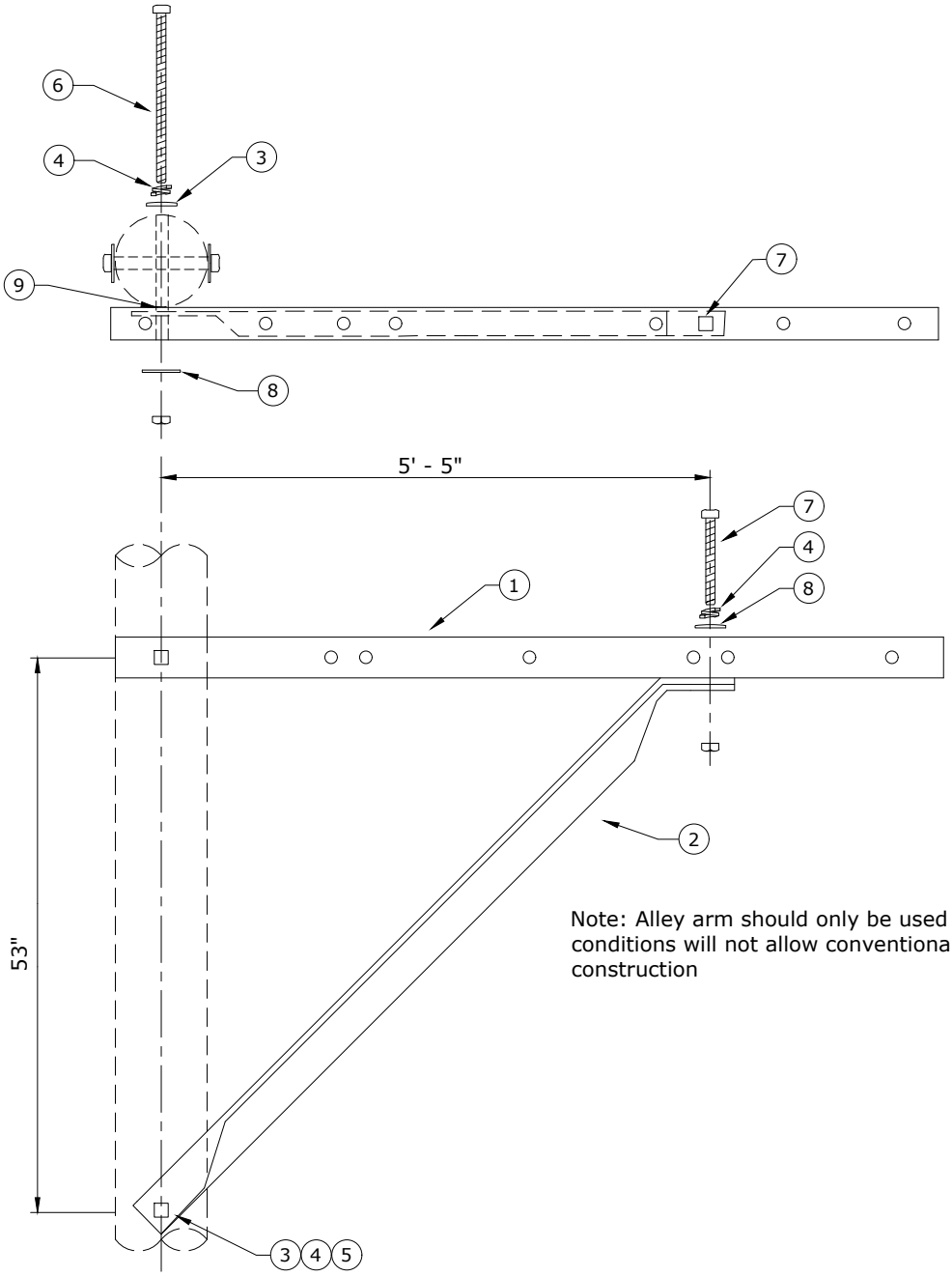

Note: Alley arm should only be used where conditions will not allow conventional construction

Rev. 4 - Updated material.

ITEM NO.	DESCRIPTION	8' Arm CRA50A QTY.	8' Arm CRA50A S/N	10' Arm CRA50B QTY.	10' Arm CRA50B S/N
1	Arm, Cross (Distr.), 3-3/4" x 4-3/4"	1	25	1	26
2	Brace, Alley Arm, (6'-11" or 10'), Galv. Steel ✡	1	200	1	201
3	Washer, Curved, Square, Cast, 3" x 3" x 3/8" Thick x 13/16" Hole ✡	2	1392	2	1392
4	Washer, Lock, Spring, Double Coil, Galv., 5/8" ✡	3	2217	3	2217
5	Bolt, Machine, 5/8" x 12", Galv., 12,400 lbs Ultimate Tensile ✡	1	155	1	155
6	Bolt, Machine, 5/8" x 16", Galv., 12,400 lbs Ultimate Tensile ✡	1	157	1	157
7	Bolt, Machine, 5/8" x 7", Galv., 12,400 lbs Ultimate Tensile ✡	1	2606	1	2606
8	Washer, Square, Flat, 2 1/4" x 2 1/4" x 5/8"	2	1412	2	1412
9	Gain, Pole Plastic	1	709	1	709

Clark Public Utilities

CONSTRUCTION STANDARDS

BASIC UNITS
SINGLE CROSSARM
ALLEY ARM

REVISIONS

R	DATE	ENGR	OPS
2	2/23/00	HWH	MA
3	5/3/06	LB	AH
4	2/24/16	KJP	

PAGE: 1 of 1

CRA50A,CRA50B

CAD FILE: CRA50

APP: ELM
DATE: 1/31/80

SECTION 200

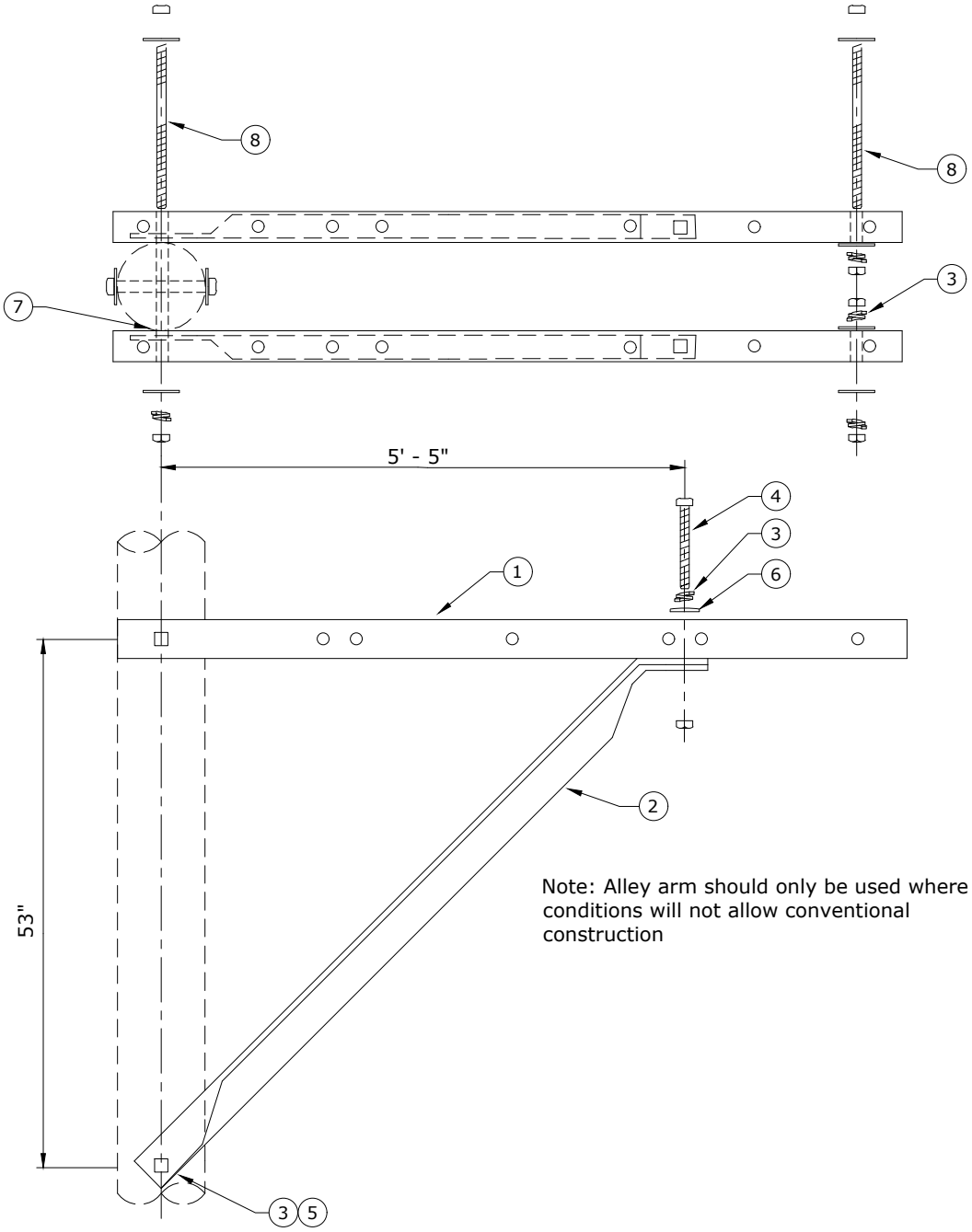

Note: Alley arm should only be used where conditions will not allow conventional construction

Rev. 4 - Updated material.

ITEM NO.	DESCRIPTION	8' Arm CRA52A QTY.	8' Arm CRA52A S/N	10' Arm CRA52B QTY.	10' Arm CRA52B S/N
1	Arm, Cross (Distr.), 3-3/4" x 4-3/4"	2	25	2	26
2	Brace, Alley Arm, (6'-11" or 10'), Galv. Steel	2	200	2	201
3	Washer, Lock, Spring, Double Coil, Galv., 5/8" ✡	6	2217	6	2217
4	Bolt, Machine, 5/8" x 7", Galv., 12,400 lbs Ultimate Tensile ✡	2	2606	2	2606
5	Bolt, Machine, 5/8" x 12", Galv., 12,400 lbs Ultimate Tensile ✡	1	155	1	155
6	Washer, Square, Flat, 2 1/4" x 2 1/4" x 5/8"	8 ✡	1412	8 ✡	1412
7	Gain, Pole Plastic	1	709	1	709
8	Bolt, Double Arm, 5/8" x 20", Galv., 12,400 lbs Ultimate Tensile ✡	2	83	2	83

Clark Public Utilities

CONSTRUCTION STANDARDS

BASIC UNITS
DOUBLE CROSSARM
ALLEY ARM

REVISIONS

R	DATE	ENGR	OPS
2	2/23/00	HWH	MA
3	5/3/06	LB	AH
4	2/24/16	KJP	

PAGE: 1 of 1

CRA52A,CRA52B

CAD FILE: CRA52

APP: ELM
DATE: 1/31/80

SECTION 200

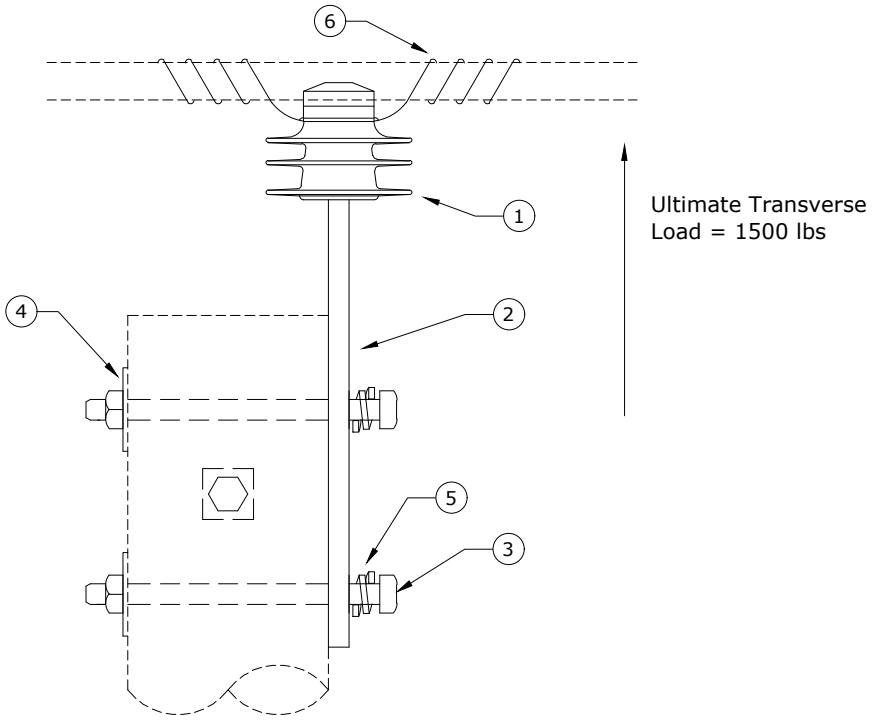

PR1 - for bare wire - use bare tie wire

PR1TREE - for tree wire - use covered tie wire

Notes:

1. See Std TI4 - Conductor Tying Guide - Section 400.
2. Ultimate Transverse Load=1,500 lbs. Ultimate Longitudinal Load=1,200 lbs.

Rev. 5 - Eliminated porcelain insulator and added tie wire notes.

ITEM NO.	DESCRIPTION	PR1TREE		PR1	
		QTY.	S/N	QTY.	S/N
1	Insulator, Pin, C Neck, Polymer	1	1968	1	1968 ✲
2	Pin, Pole Top	1	962	1	962
3	Bolt, Machine, 5/8" x 12" Galv., 12,400 lbs Ultimate Tensile	2	155	2	155
4	Washer, Curved, Square, Cast, 3" x 3" x 3/8" Thick x 13/16" Hole	2	1392	2	1392
5	Washer, Lock, Spring, Double Coil, Galv., 5/8"	2	2217	2	2217
6	Wire, Tie, AL Annealed #4 SD	11✲	3012	10	1421

Clark Public Utilities

CONSTRUCTION STANDARDS

BASIC UNITS
POLE-TOP PIN
SINGLE INSULATOR

REVISIONS

R	DATE	ENGR	OPS
3	2/23/00	HWH	MA
4	5/3/06	LB	AH
5	12/22/16	CM	DK

PAGE: 1 of 1

PR1,PR1TREE

CAD FILE: PR1

APP: ELM

DATE: 1/31/80

SECTION 200

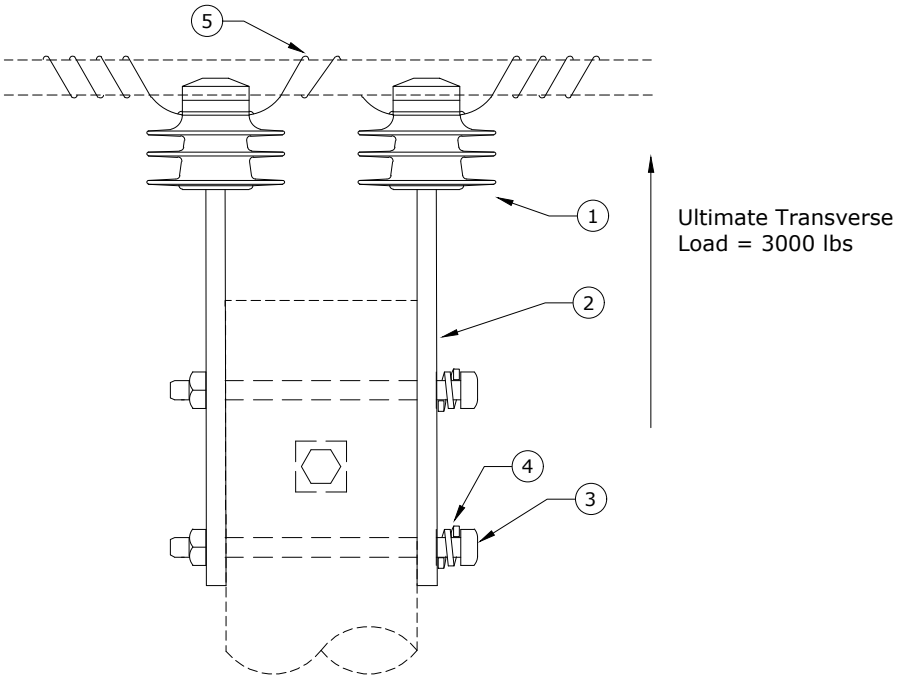

PR2 - for bare wire - use bare tie wire

PR2TREE - for tree wire - use covered tie wire

Notes:

1. See Std TI5 - Conductor Tying Guide - Section 400.
2. Ultimate Transverse Load=3,000 lbs. Ultimate Longitudinal Load=2,400 lbs.

Rev. 5 - Eliminated porcelain insulator and added tie wire notes.

ITEM NO.	DESCRIPTION	PR2TREE		PR2	
		QTY.	S/N	QTY.	S/N
1	Insulator, Pin, C Neck, Polymer	2	1968	2	1968 ✲
2	Pin, Pole Top	2	962	2	962
3	Bolt, Machine, 5/8" x 14" Galv., 12,400 lbs Ultimate Tensile	2	156	2	156
4	Washer, Lock, Spring, Double Coil, Galv., 5/8"	2	2217	2	2217
5	Wire, Tie, AL Annealed #4 SD	22✲	3012	20	1421

Clark Public Utilities

CONSTRUCTION STANDARDS

BASIC UNITS
POLE-TOP PIN
DOUBLE INSULATORS

REVISIONS

R	DATE	ENGR	OPS
3	2/23/00	HWH	MA
4	2/13/06	LB	AH
5	12/22/16	CM	DK

PAGE: 1 of 1

PR2,PR2TREE

CAD FILE: PR2

APP: ELM

DATE: 1/31/80

SECTION 200

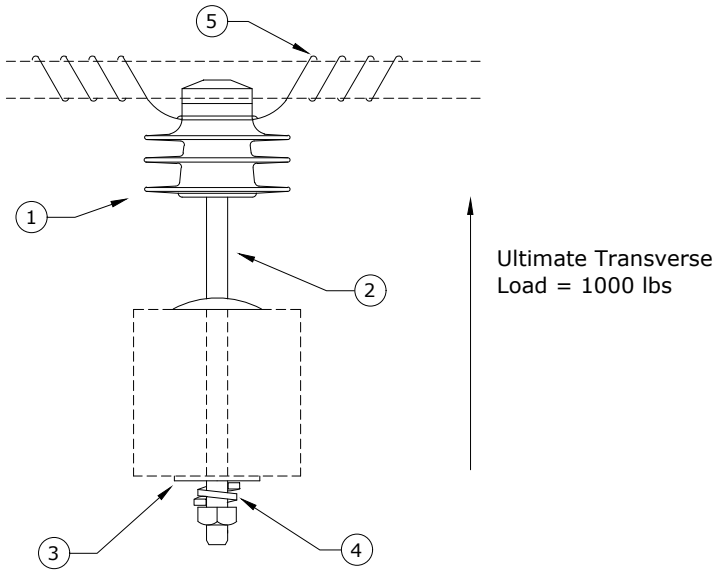

PR4 - for bare wire - use bare tie wire

PR4TREE - for tree wire - use covered tie wire

Notes:
1. See Std TI4 - Conductor Tying Guide - Section 400.
2. Ultimate Cantilever Load=1,000 lbs.

Rev. 5 - Eliminated porcelain insulator and added tie wire notes.

ITEM NO.	DESCRIPTION	PR4TREE		PR4	
		QTY.	S/N	QTY.	S/N
1	Insulator, Pin, C Neck, Polymer	1	1968	1	1968 ✲
2	Pin, Crossarm	1	961	1	961
3	Washer, Square Flat 5/8", 2 1/4" x 2 1/4"	1	1412	1	1412
4	Washer, Lock, Spring, Double Coil, Galv., 5/8"	1	2217	1	2217
5	Wire, Tie, AL Annealed #4 SD	11✲	3012	10	1421

Clark Public Utilities

CONSTRUCTION STANDARDS

BASIC UNITS
SINGLE CROSSARM PIN

REVISIONS

R	DATE	ENGR	OPS
3	2/23/00	HWH	MA
4	5/3/06	LB	AH
5	12/22/16	CM	DK

PAGE: 1 of 1

PR4,PR4TREE

CAD FILE: PR4

APP: ELM
DATE: 1/31/80

SECTION 200

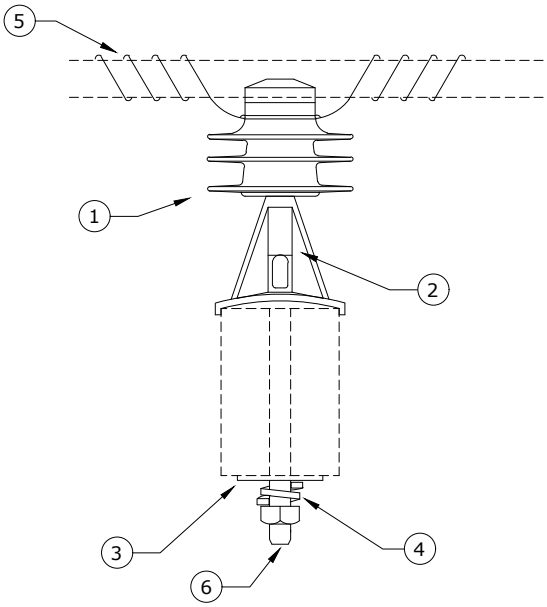

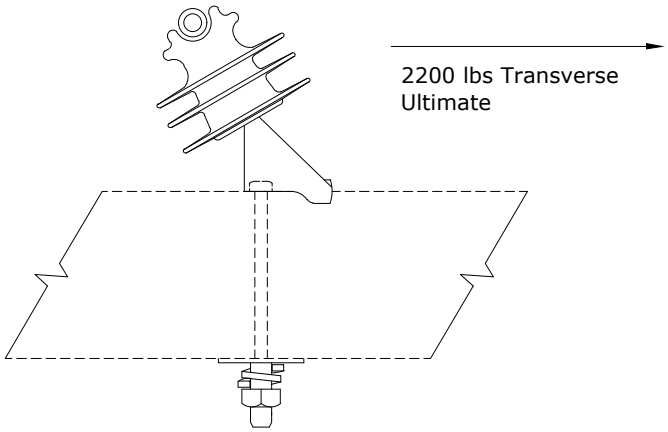

PR5 - for bare wire - use bare tie wire

PR5TREE - for tree wire - use covered tie wire

Note: See Std TI4 - Conductor Tying Guide - Section 400.

Rev. 1 - Eliminated porcelain insulator and added tie wire notes.

ITEM NO.	DESCRIPTION	PR5TREE		PR5	
		QTY.	S/N	QTY.	S/N
1	Insulator, Pin, C Neck, Polymer	1	1968	1	1968 ✡
2	Pin, Angle, Crossarm	1	2658	1	2658
3	Washer, Square Flat 5/8", 2 1/4" x 2 1/4"	1	1412	1	1412
4	Washer, Lock, Spring, Double Coil, Galv., 5/8"	1	2217	1	2217
5	Wire, Tie, AL Annealed #4 SD	11✡	3012	10	1421
6	Bolt, Machine, 5/8" x 7" Galv., 12,400 lbs Ultimate Tensile	1	2606	1	2606 ✡

Clark Public Utilities

CONSTRUCTION STANDARDS

BASIC UNITS
SINGLE CROSSARM ANGLE PIN

REVISIONS

R	DATE	ENGR	OPS
1	12/22/16	CM	DK

PAGE: 1 of 1

PR5,PR5TREE

CAD FILE: PR5

APP: LB/AH
DATE: 5/03/06

SECTION 200

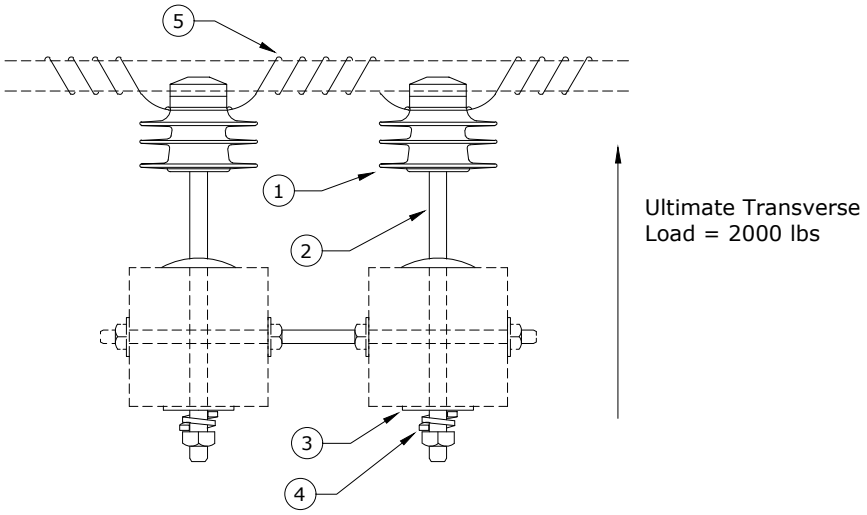

PR19 - for bare wire - use bare tie wire

PR19TREE - for tree wire - use covered tie wire

Notes:
1. See Std TI5 - Conductor Tying Guide - Section 400.
2. Ultimate Cantilever Load=2,000 lbs.

Rev. 5 - Eliminated porcelain insulator and added tie wire notes.

ITEM NO.	DESCRIPTION	PR19TREE		PR19	
		QTY.	S/N	QTY.	S/N
1	Insulator, Pin, C Neck, Polymer	2	1968	2	1968 ✲
2	Pin, Crossarm	2	961	2	961
3	Washer, Square Flat, 5/8", 2 1/4" x 2 1/4"	2	1412	2	1412
4	Washer, Lock, Spring, Double Coil, Galv., 5/8"	2	2217	2	2217
5	Wire, Tie, AL Annealed #4 SD	22✲	3012	20	1421

Clark Public Utilities

CONSTRUCTION STANDARDS

BASIC UNITS
DOUBLE CROSSARM PIN

REVISIONS

R	DATE	ENGR	OPS
3	2/23/00	HWH	MA
4	5/03/06	LB	AH
5	12/22/16	CM	DK

PAGE: 1 of 1

PR19,PR19TREE

CAD FILE: PR19

APP: ELM
DATE: 1/31/80

SECTION 200

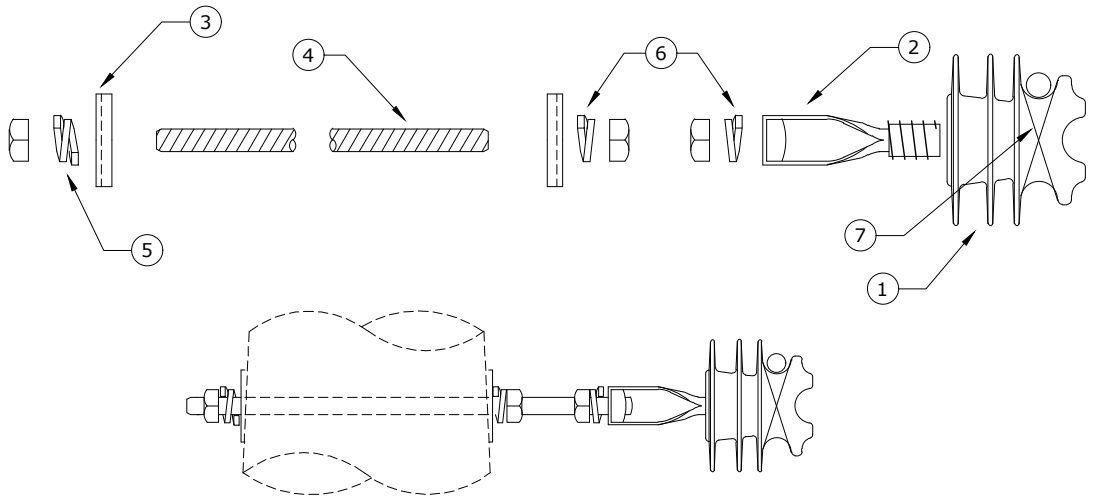

PR20 - for bare wire- use bare tie wire

PR20TREE - for tree wire- use covered tie wire

Note: See Std TI4 - Section 400 - Conductor Tying Guide.

Rev. 5 - Eliminated porcelain insulator and added tie wire notes.

ITEM NO.	DESCRIPTION	PR20TREE		PR20	
		QTY.	S/N	QTY.	S/N
1	Insulator, Pin, C Neck, Polymer	1	1968	1	1968 ✲
2	Pin, Adapter	1	959	1	959
3	Washer, Curved, Square, Cast, 3" x 3" x 3/8" Thick x 13/16" Hole	2	1392	2	1392
4	Bolt, Double Arm, 5/8" x 16" Galv., 12,400 lbs Ultimate Tensile ✲	1	81	1	81
5	Washer, Lock, Spring, Double Coil, Galv., 5/8"	1	2217	1	2217
6	Washer, Lock, Spring, Single Coil, Galv., 5/8"	2	1403	2	1403
7	Wire, Tie, AL Annealed #4 SD	11✲	3012	10	1421

Clark Public Utilities

CONSTRUCTION STANDARDS

BASIC UNITS
HORIZONTAL JUMPER SUPPORT

REVISIONS

R	DATE	ENGR	OPS
3	2/23/00	HWH	MA
4	5/3/06	LB	AH
5	12/22/16	CM	DK

PAGE: 1 of 1

PR20,PR20TREE

CAD FILE: PR20

APP: ELM

DATE: 1/31/80

SECTION 200

TOP VIEW

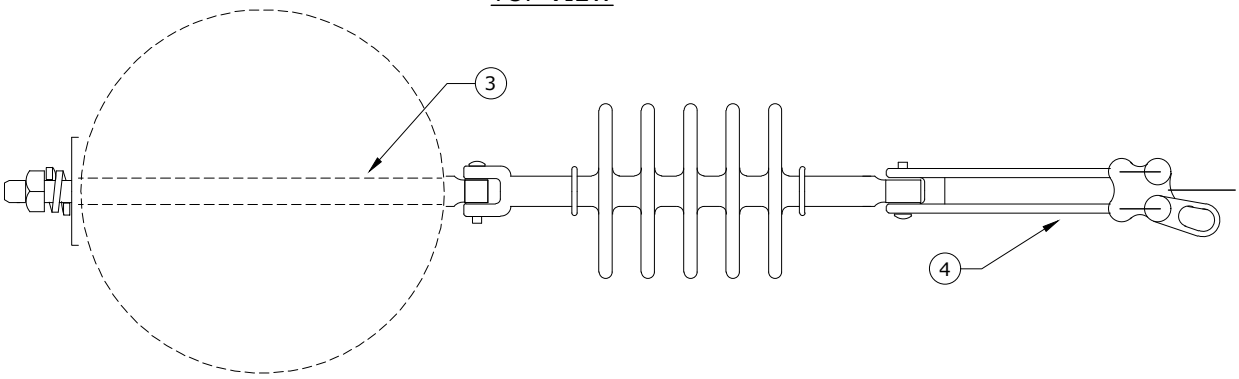

SIDE VIEW

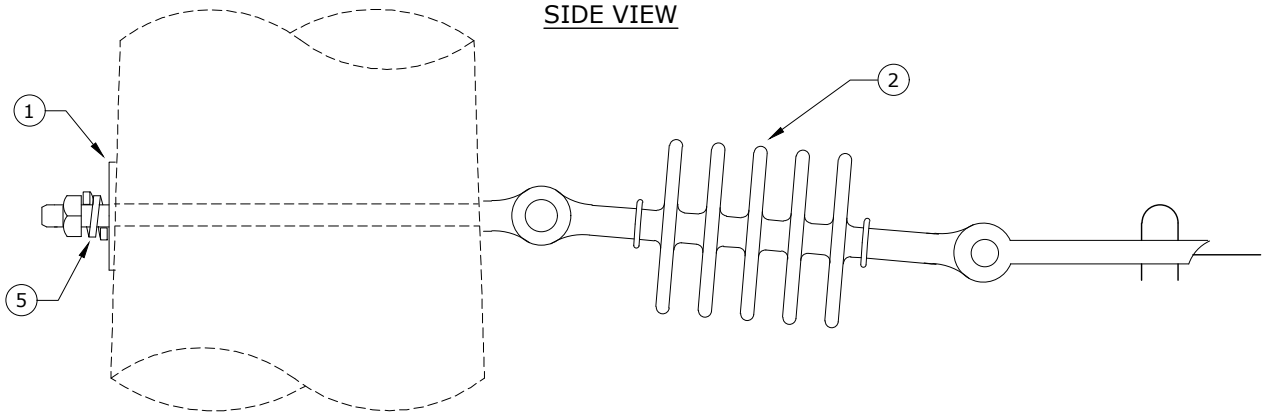

Rev. 4 - Updated material.

ITEM NO.	DESCRIPTION	PR21	
		QTY.	S/N
1	Washer, Curved, Square, Cast, 3" x 3" x 3/8" Thick x 13/16" Hole	1	1392
2	Insulator, Susp. 15kV Clevis - Tongue, Polymer ✡	1	1967
3	Bolt, Eye, 5/8" x 14", Galv., 12,400 lbs Ultimate Tensile ✡	1	108
4	Clamp, Strain, Distribution, #2 to 397.5 MCM	1	302
5	Washer, Lock, Spring, Double Coil, Galv., 5/8" ✡	1	2217

Clark Public Utilities

CONSTRUCTION STANDARDS

BASIC UNITS
DEADEND WITH EYEBOLT

REVISIONS

R	DATE	ENGR	OPS
2	2/23/00	HWH	MA
3	5/15/06	LB	AH
4	2/24/16	KJP	

PAGE: 1 of 1

PR21

CAD FILE: PR21

APP: ELM

DATE: 1/31/80

SECTION 200

TOP VIEW

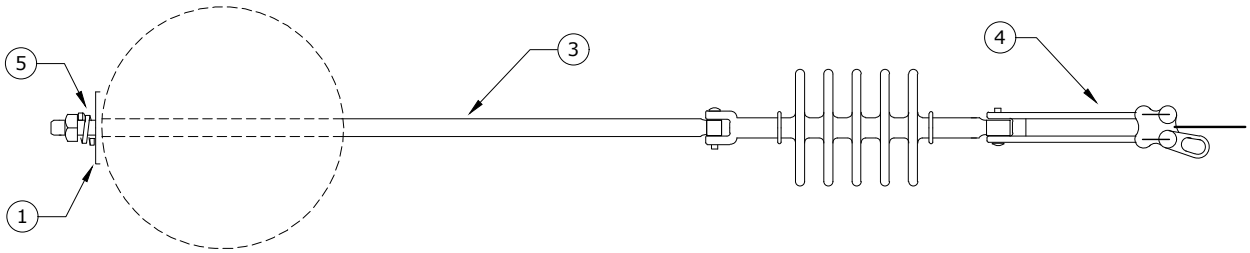

SIDE VIEW

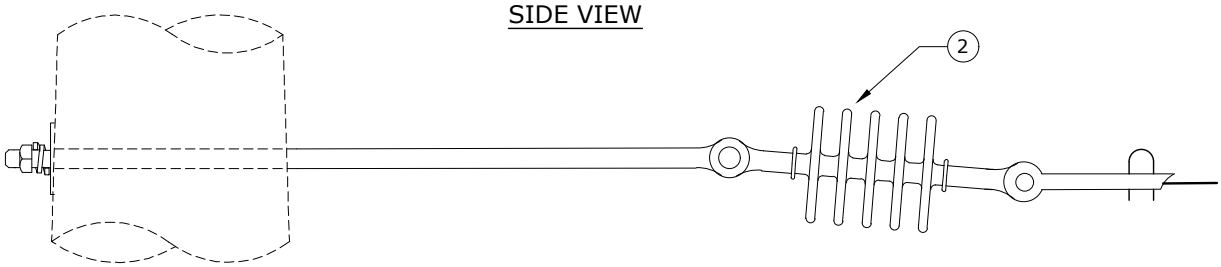

Rev. 4 - Updated material.

ITEM NO.	DESCRIPTION	PR22	
		QTY.	S/N
1	Washer, Curved, Square, Cast, 3" x 3" x 3/8" Thick x 13/16" Hole	1	1392
2	Insulator, Susp. 15kV Clevis-Tongue, Polymer ✡	1	1967
3	Bolt, Eye, 5/8" x 28", Galv., 12,400 lbs Ultimate Tensile ✡	1	113
4	Clamp, Strain, Distribution, #2 to 397.5 MCM	1	302
5	Washer, Lock, Spring, Double Coil, Galv., 5/8" ✡	1	2217

Clark Public Utilities

CONSTRUCTION STANDARDS

BASIC UNITS
DEADEND WITH
LONG EYEBOLT

REVISIONS

R	DATE	ENGR	OPS
2	2/23/00	HWH	MA
3	5/15/06	LB	AH
4	2/24/16	KJP	

PAGE: 1 of 1

PR22

CAD FILE: PR22

APP: ELM

DATE: 1/31/80

SECTION 200

TOP VIEW

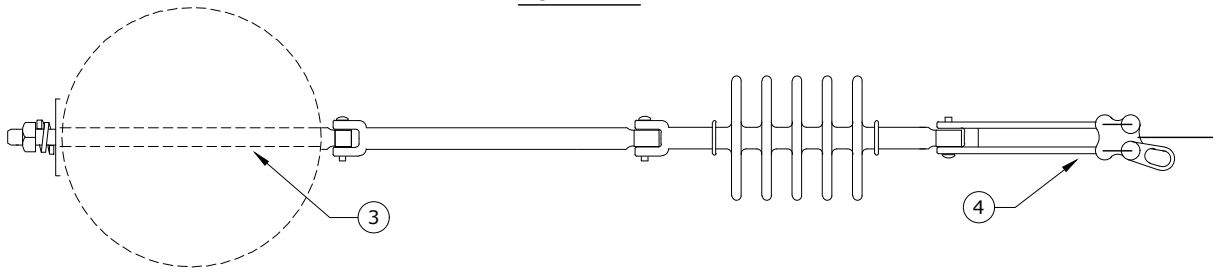

SIDE VIEW

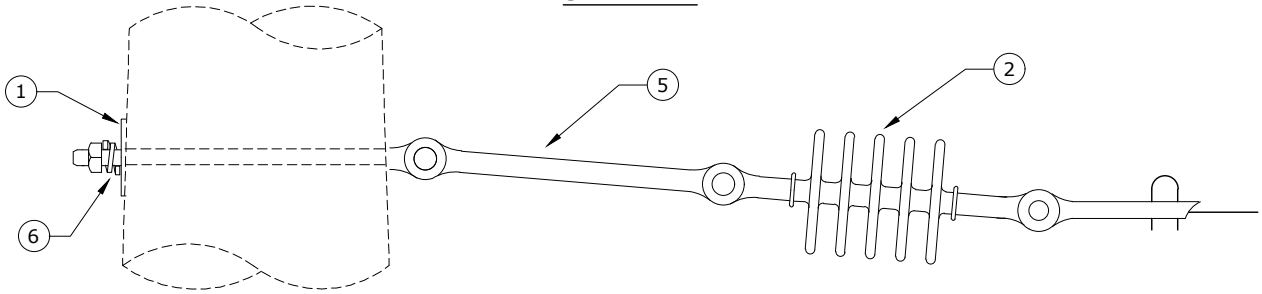

Rev. 4 - Updated material.

ITEM NO.	DESCRIPTION	PR23	
		QTY.	S/N
1	Washer, Curved, Square, Cast, 3" x 3" x 3/8" Thick x 13/16" Hole	1	1392
2	Insulator, Susp. 15kV Clevis-Tongue, Polymer ✡	1	1967
3	Bolt, Eye, 5/8" x 14", Galv., 12,400 lbs Ultimate Tensile ✡	1	108
4	Clamp, Strain, Distribution, #2 to 397.5 MCM	1	302
5	Insulator, Guy Strain, Fiberglass, 20"	1	2909 ✡
6	Washer, Lock, Spring, Double Coil, Galv., 5/8" ✡	1	2217

Clark Public Utilities

CONSTRUCTION STANDARDS

BASIC UNITS
DEADEND WITH EXTENSION

REVISIONS

R	DATE	ENGR	OPS
2	2/23/00	HWH	MA
3	5/15/06	LB	AH
4	2/24/16	KJP	

PAGE: 1 of 1

PR23

CAD FILE: PR23

APP: ELM

DATE: 1/31/80

SECTION 200

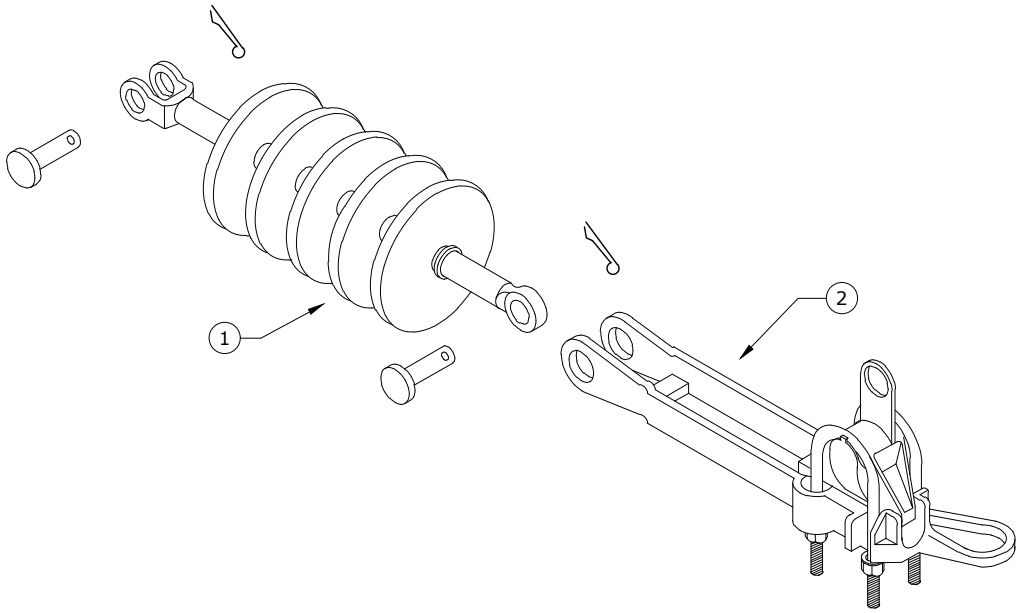

Rev. 4 - Updated material.

ITEM NO.	DESCRIPTION	PR24 QTY.	PR24 S/N
1	Insulator, Susp. 15 kV Clevis-Tongue, Polymer ✲	1	1967
2	Clamp, Strain, Distribution, #2 to 397.5 MCM	1	302

Clark Public Utilities

CONSTRUCTION STANDARDS

BASIC UNITS
DEADEND

REVISIONS

R	DATE	ENGR	OPS
2	2/23/00	HWH	MA
3	5/15/06	LB	AH
4	2/14/16	KJP	

PAGE: 1 of 1

PR24

CAD FILE: PR24

APP: ELM
DATE: 1/31/80

SECTION 200

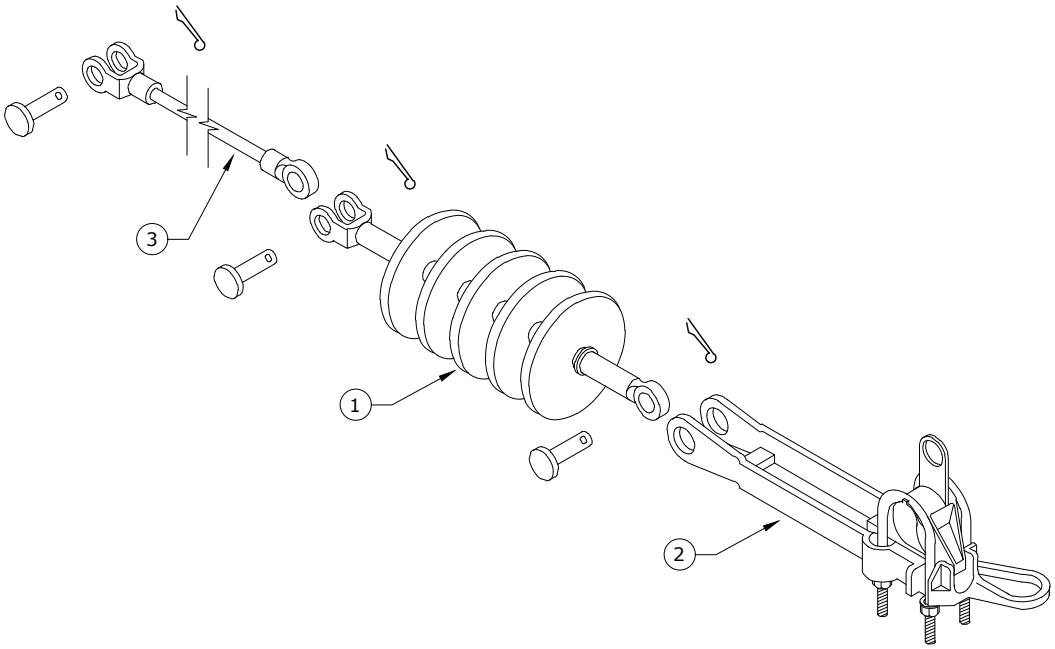

Rev. 4 - Updated material.

ITEM NO.	DESCRIPTION	PR25 QTY.	PR25 S/N
1	Insulator, Susp. 15 kV Clevis-Toungue, Polymer ✡	1	1967
2	Clamp, Strain, Distribution, #2 to 397.5 MCM	1	302
3	Insulator, Guy Strain, Fiberglass, 20"	1	2909 ✡

Clark Public Utilities

CONSTRUCTION STANDARDS

BASIC UNITS
DEADEND WITH EXTENSION

REVISIONS

R	DATE	ENGR	OPS
2	2/23/00	HWH	MA
3	5/15/06	LB	AH
4	2/24/16	KJP	

PAGE: 1 of 1

PR25

CAD FILE: PR25

APP: ELM

DATE: 1/31/80

SECTION 200

Installation:

- 1st tighten the bottom bolt until ring breaks off
- 2nd tighten the top bolt until ring breaks off
- Remove bolts with socket stick
- Do not reuse bolts after rings have broken off

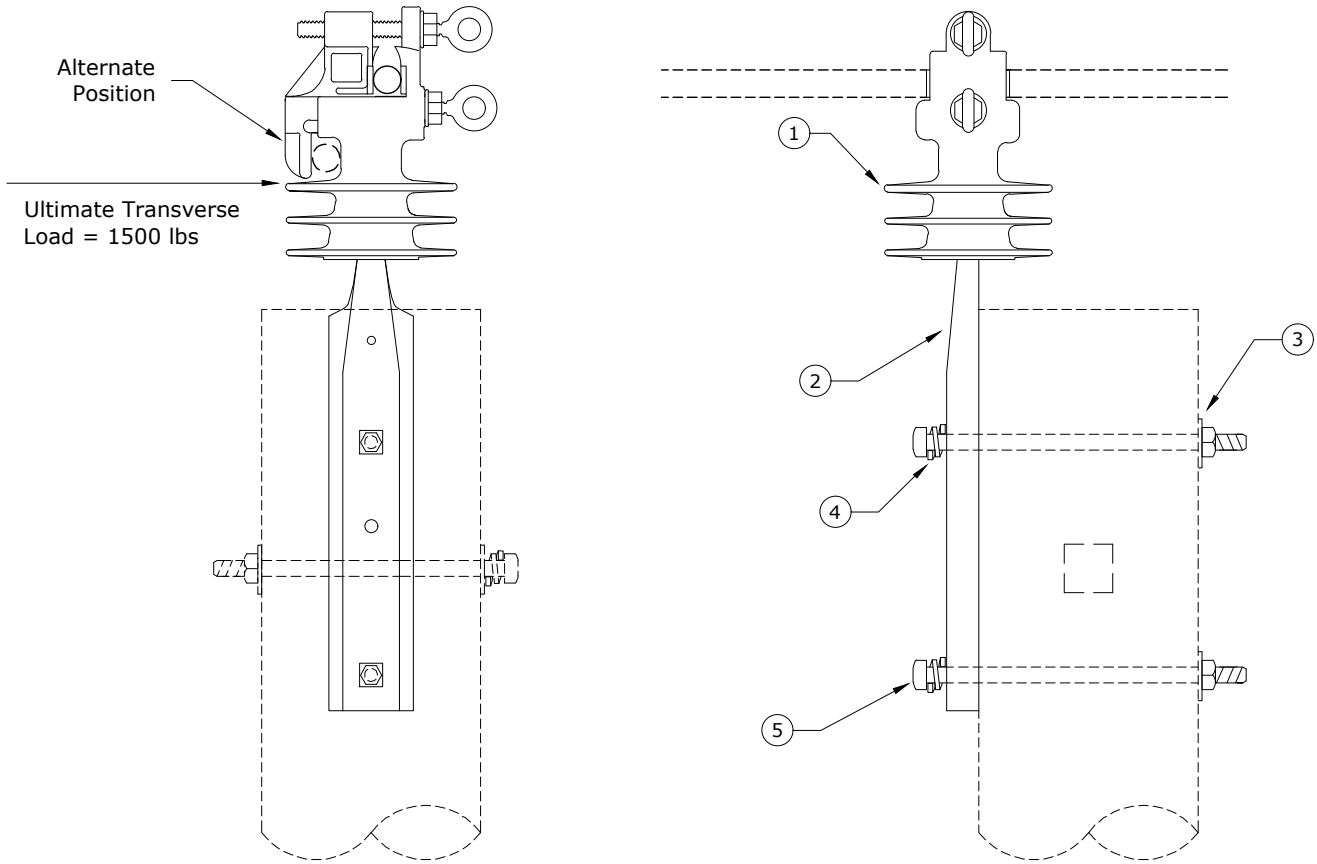

Notes:

1. Ultimate transverse load = 1,500 lbs. Ultimate longitudinal load = 1,200 lbs.
2. Replacement vise-top insulator bolts S/N 2888.

Rev. 6 - Changed insulator to vise-top and updated material issue.

ITEM NO.	DESCRIPTION	PR40	
		QTY.	S/N
1	Insulator, Vise-Top, Polymer ✡	1	2439
2	Pin, Pole Top ✡	1	962
3	Washer, Curved, Square, 3" x 3" x 3/8" Thick x 13/16" Hole	2	1392
4	Washer, Lock, Spring, Double Coil, Galv., 5/8" ✡	2	2217
5	Bolt, Machine, 5/8" x 12", Galv., 12,400 lbs. Ultimate Tensile ✡	2	155

Clark Public Utilities

CONSTRUCTION STANDARDS

BASIC UNITS
POLE-TOP PIN
SINGLE VISE-TOP INSULATOR

REVISIONS

R	DATE	ENGR	OPS
3	2/23/00	HWH	MA
4	3/12/02	JEH	
5	5/15/06	LB	AH
6	12/22/16	CM	DK

PAGE: 1 of 1

PR40

CAD FILE: PR40

APP: ELM

DATE: 1/31/80

SECTION 200

Installation:

- 1st tighten the bottom bolt until ring breaks off
- 2nd tighten the top bolt until ring breaks off
- Remove bolts with socket stick
- Do not reuse bolts after rings have broken off

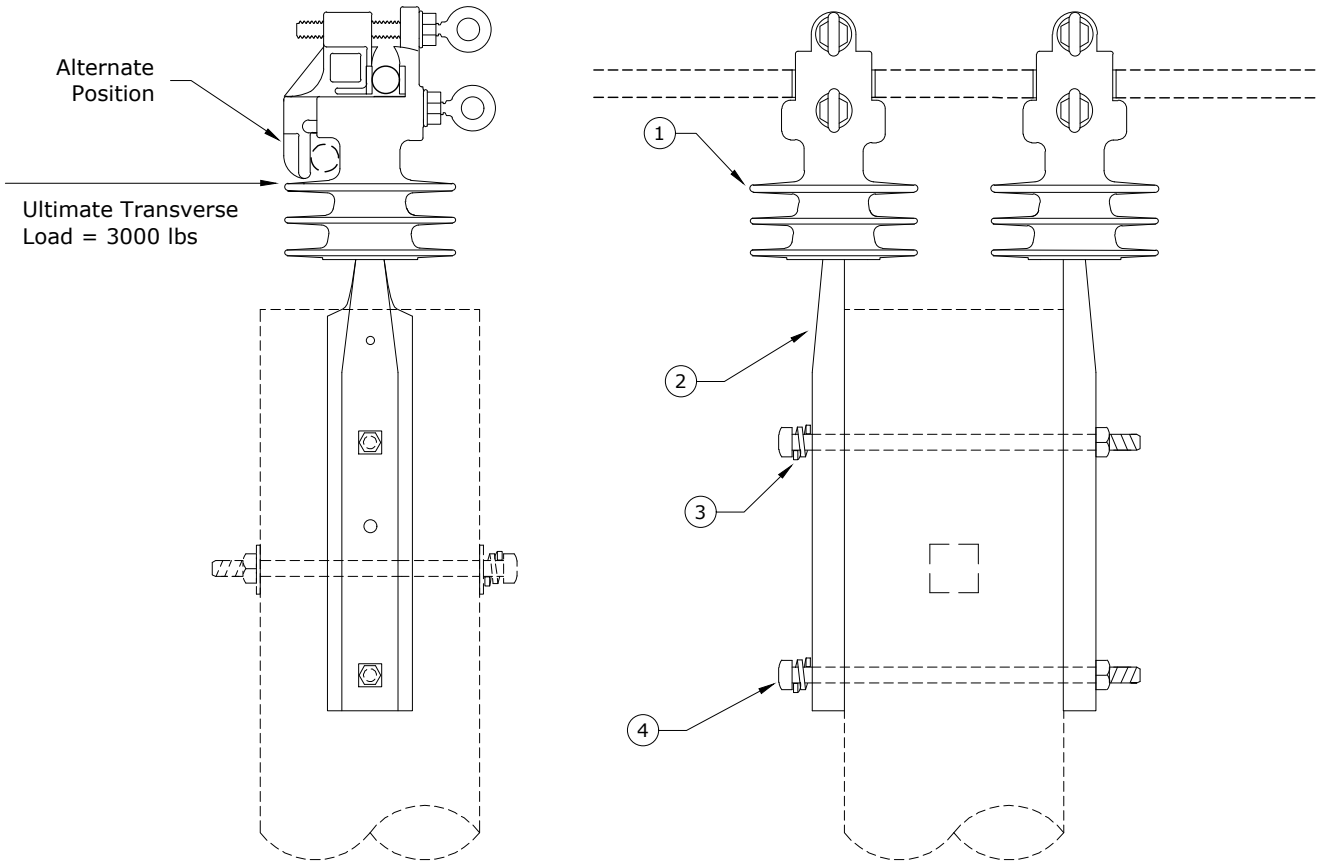

Notes:

1. Ultimate transverse load = 3,000 lbs. Ultimate longitudinal load = 2,400 lbs.
2. Replacement vise-top insulator bolts S/N 2888.

Rev. 6 - Changed insulator to vise-top and updated material issue.

ITEM NO.	DESCRIPTION	PR41	
		QTY.	S/N
1	Insulator, Vise-Top, Polymer ✡	2	2439
2	Pin, Pole Top ✡	2	962
3	Washer, Lock, Spring, Double Coil, Galv., 5/8" ✡	2	2217
4	Bolt, Machine, 5/8" x 14", Galv., 12,400 lbs. Ultimate Tensile ✡	2	156

Clark Public Utilities

CONSTRUCTION STANDARDS

BASIC UNITS
POLE-TOP PIN
DOUBLE VISE-TOP INSULATOR

REVISIONS

R	DATE	ENGR	OPS
3	2/23/00	HWH	MA
4	3/12/02	JEH	
5	5/15/06	LB	AH
6	12/22/16	CM	DK

PAGE: 1 of 1

PR41

CAD FILE: PR41

APP: ELM

DATE: 1/31/80

SECTION 200

Installation:

- 1st tighten the bottom bolt until ring breaks off
- 2nd tighten the top bolt until ring breaks off
- Remove bolts with socket stick
- Do not reuse bolts after rings have broken off

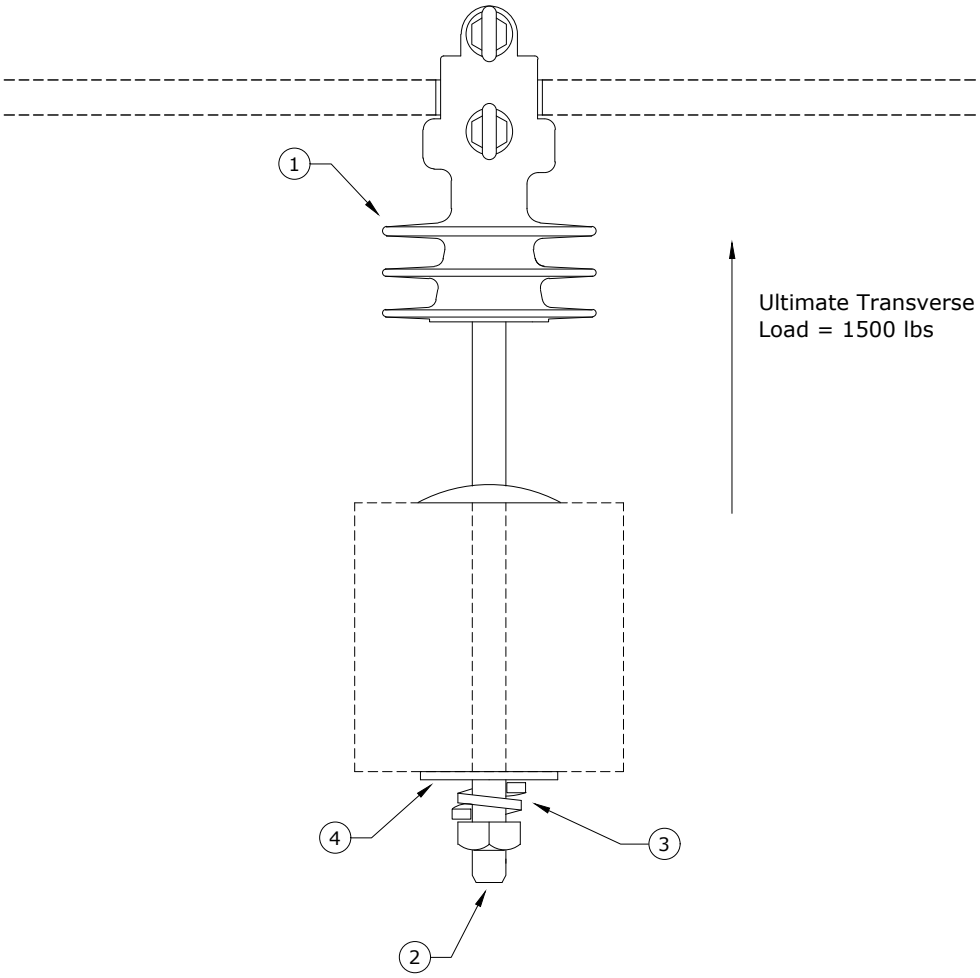

Notes:

1. Ultimate longitudinal load = 1,000 lbs.
2. Replacement vise-top insulator bolts S/N 2888.

Rev. 5 - Changed insulator to vise-top and updated material issue.

ITEM NO.	DESCRIPTION	PR42	
		QTY.	S/N
1	Insulator, Vise-Top, Polymer ✲	1	2439
2	Pin, Crossarm ✲	1	961
3	Washer, Lock, Spring, Double Coil, Galv., 5/8" ✲	1	2217
4	Washer, Square Flat, 5/8", 2 1/4" x 2 1/4"	1	1412

Clark Public Utilities

CONSTRUCTION STANDARDS

BASIC UNITS
SINGLE VISE-TOP
INSULATOR ON CROSSARM

REVISIONS

R	DATE	ENGR	OPS
3	2/23/00	HWH	MA
4	5/15/06	LB	AH
5	12/22/16	CM	DK

PAGE: 1 of 1

PR42

CAD FILE: PR42

APP: ELM

DATE: 1/31/80

SECTION 200

Installation:

- 1st tighten the bottom bolt until ring breaks off
- 2nd tighten the top bolt until ring breaks off
- Remove bolts with socket stick
- Do not reuse bolts after rings have broken off

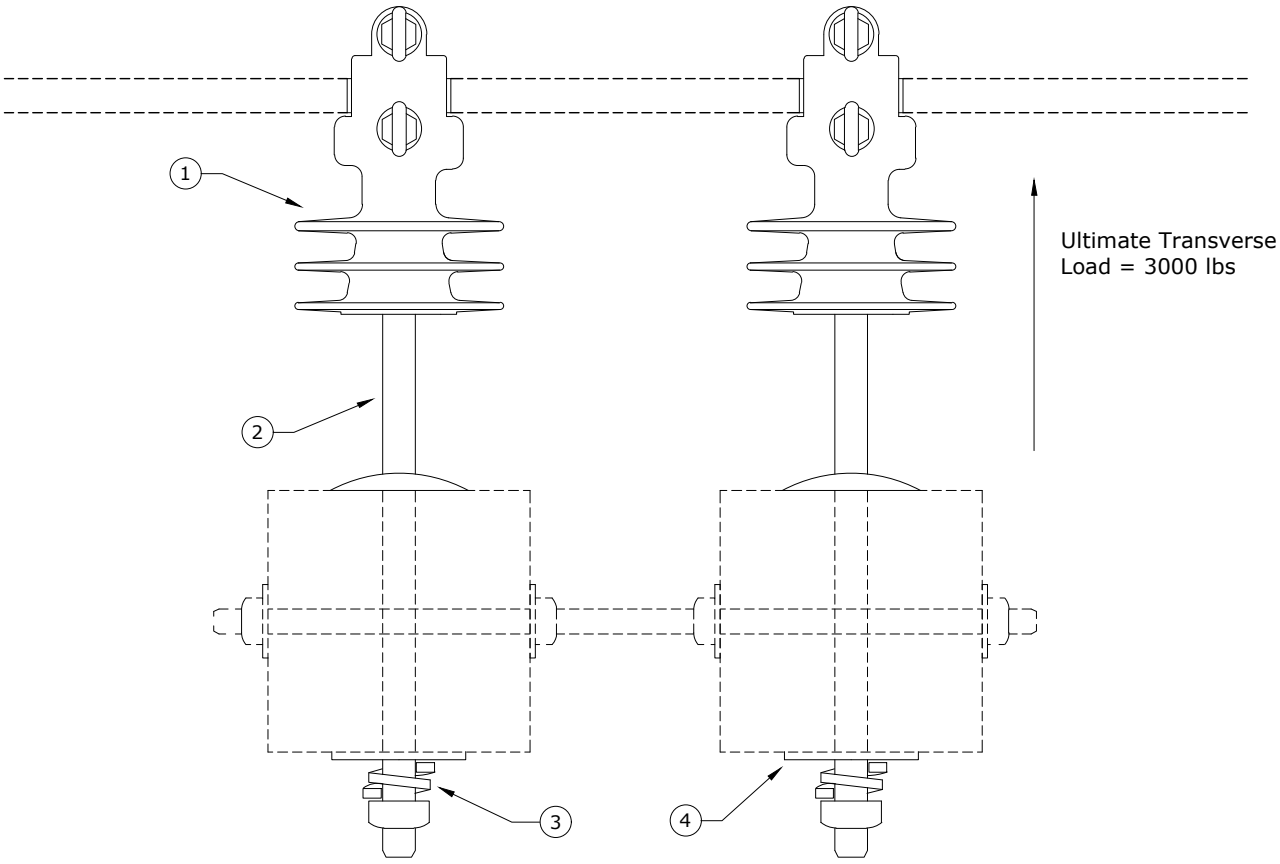

Notes:

1. Ultimate longitudinal load = 2,000 lbs.
2. Replacement vise-top insulator bolts S/N 2888.

Rev. 5 - Changed insulators to vise-top and updated material issue.

ITEM NO.	DESCRIPTION	PR43	
		QTY.	S/N
1	Insulator, Vise-Top, Polymer ✡	2	2439
2	Pin, Crossarm ✡	2	961
3	Washer, Lock, Spring, Double Coil, Galv., 5/8" ✡	2	2217
4	Washer, Square Flat, 5/8", 2 1/4" x 2 1/4"	2	1412

Clark Public Utilities

CONSTRUCTION STANDARDS

BASIC UNITS
DOUBLE VISE-TOP
INSULATORS ON CROSSARMS

REVISIONS

R	DATE	ENGR	OPS
3	2/23/00	HWH	MA
4	5/15/06	LB	AH
5	12/22/16	CM	DK

PAGE: 1 of 1

PR43

CAD FILE: PR43

APP: ELM

DATE: 1/31/80

SECTION 200

Installation:

- 1st tighten the bottom bolt until ring breaks off
- 2nd tighten the top bolt until ring breaks off
- Remove bolts with socket stick
- Do not reuse bolts after rings have broken off

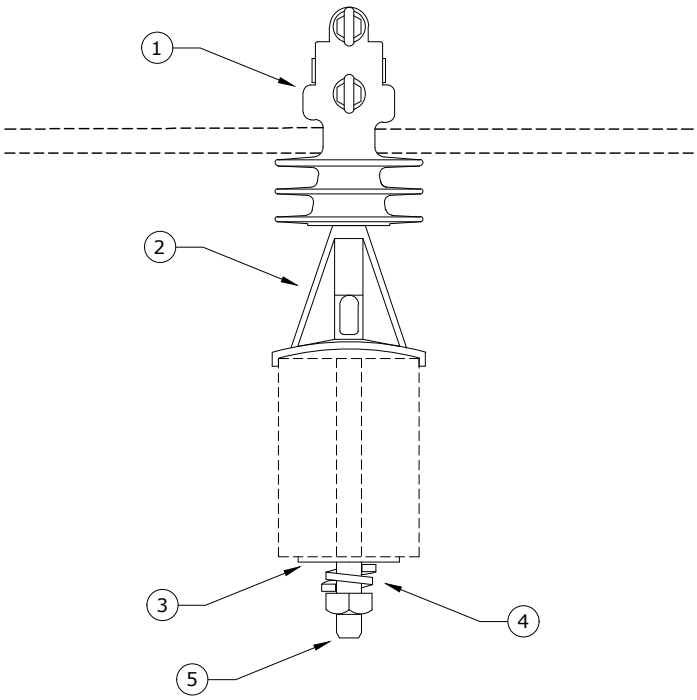

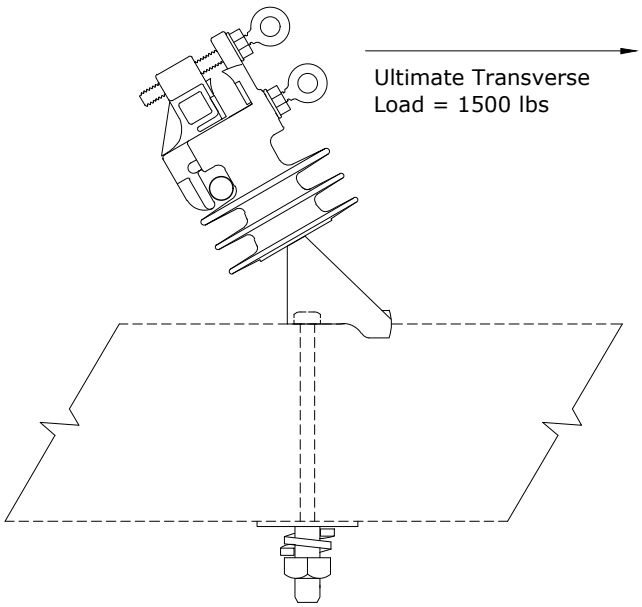

Notes:

1. Ultimate transverse load = 1,500 lbs.
2. Replacement vise-top insulator bolts S/N 2888.

Rev. 5 - Changed insulator to vise-top and updated material issue.

ITEM NO.	DESCRIPTION	PR44	
		QTY.	S/N
1	Insulator, Vise-Top, Polymer ✡	1	2439
2	Pin, Angle, Crossarm ✡	1	2658
3	Washer, Square Flat 5/8", 2 1/4" x 2 1/4"	1	1412
4	Washer, Lock, Spring, Double Coil, Galv., 5/8" ✡	1	2217
5	Bolt, Machine, 5/8" x 7" Galv., 12,400 lbs. Ultimate Tensile ✡	1	2606

Clark Public Utilities

CONSTRUCTION STANDARDS

BASIC UNITS
SINGLE ANGLE VISE-TOP
INSULATOR ON CROSSARM

REVISIONS

R	DATE	ENGR	OPS
3	2/23/00	HWH	MA
4	5/15/06	LB	AH
5	12/22/16	CM	DK

PAGE: 1 of 1

PR44

CAD FILE: PR44

APP: ELM

DATE: 1/31/80

SECTION 200

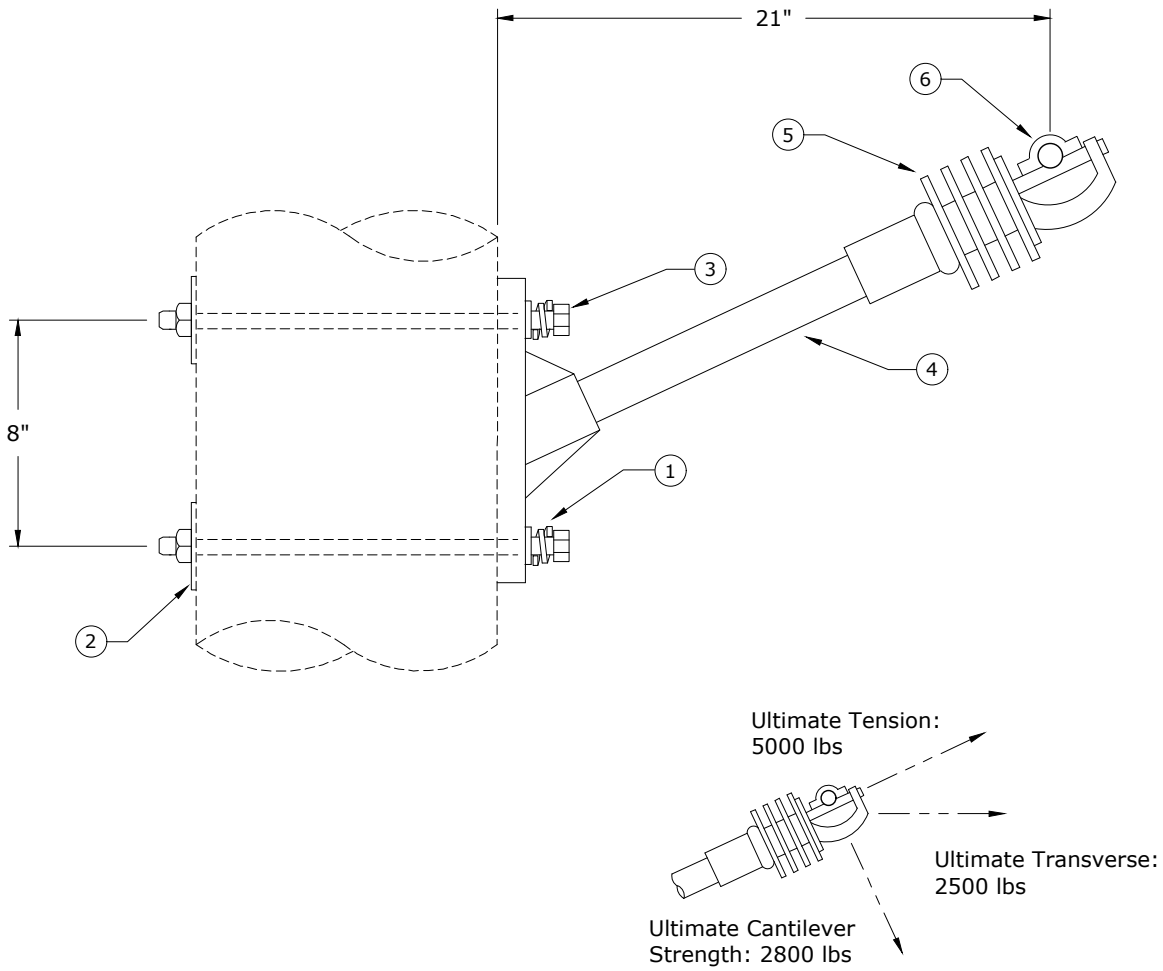

Note: Use only when uplift needs to be considered.

Rev. 4 - Updated material.

ITEM NO.	DESCRIPTION	PR56 QTY.	PR56 S/N
1	Washer, Lock, Spring, Double Coil, Galv., 5/8" ✡	2	2217
2	Washer, Curved, Square, Cast, 3" x 3" x 3/8" Thick x 13/16" Hole	2	1392
3	Bolt, Machine 5/8" x 14", Galv., 12,400 lbs Ultimate Tensile ✡	2	156
4	Arm, Epoxy 21" 2500 lbs	1	40
5	Insulator, Clamp-Top 15 kV	1	760
6	Clamp, Wire, Insulated, 336 - 795 MCM	1	316

Clark Public Utilities

CONSTRUCTION STANDARDS

BASIC UNITS
SINGLE CLAMP-TOP
TWIGGY ARM 21"

REVISIONS

R	DATE	ENGR	OPS
2	2/23/00	HWH	MA
3	10/7/05	LB	AH
4	2/24/16	KJP	

PAGE: 1 of 1

PR56

CAD FILE: PR56

APP: ELM

DATE: 1/31/80

SECTION 200

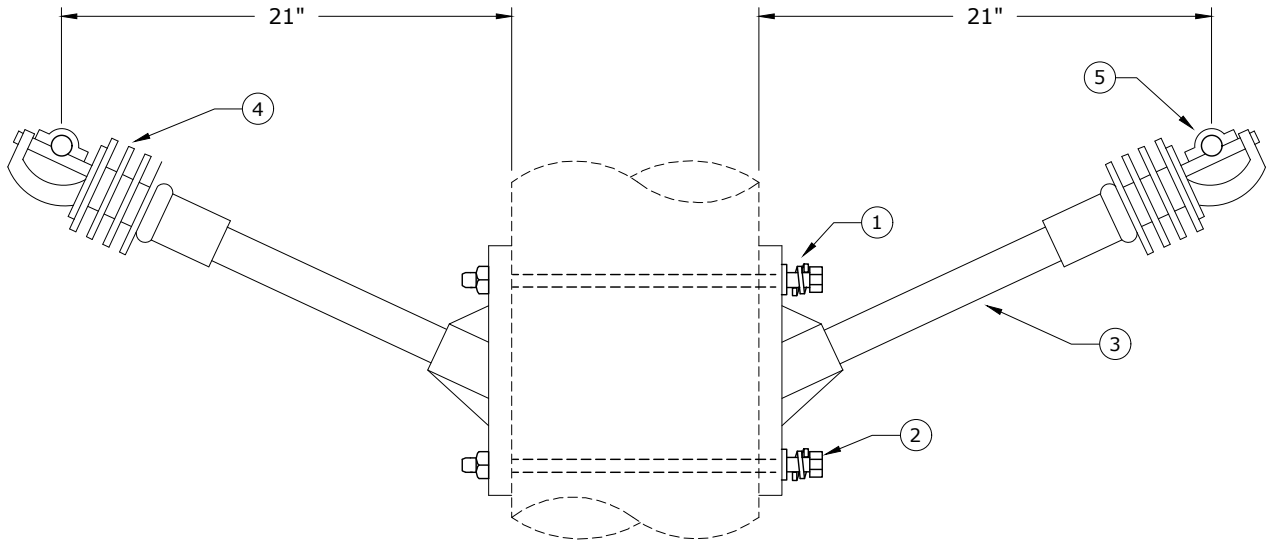

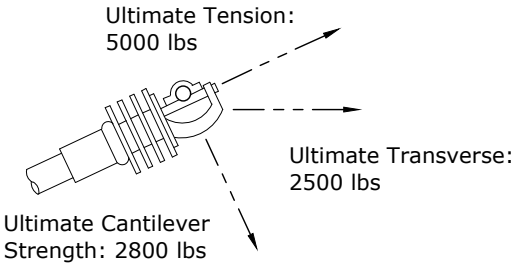

Note: Use only when uplift needs to be considered.

Rev. 4 - Updated material.

ITEM NO.	DESCRIPTION	PR57 QTY.	PR57 S/N
1	Washer, Lock Spring Double Coil, Galv., 5/8" ✡	2	2217
2	Bolt, Machine 5/8" x 16", Galv., 12,400 lbs Ultimate Tensile ✡	2	157
3	Arm, Epoxy 21" 2500 lbs	2	40
4	Insulator, Clamp-Top 15 kV	2	760
5	Clamp, Wire, Insulated, 336 - 795 MCM	2	316

Clark Public Utilities

CONSTRUCTION STANDARDS

BASIC UNITS
DOUBLE CLAMP-TOP
TWIGGY ARM 21"

REVISIONS

R	DATE	ENGR	OPS
2	2/23/00	HWH	MA
3	10/7/05	LB	AH
4	2/24/16	KJP	

PAGE: 1 of 1

PR57

CAD FILE: PR57

APP: ELM

DATE: 1/31/80

SECTION 200

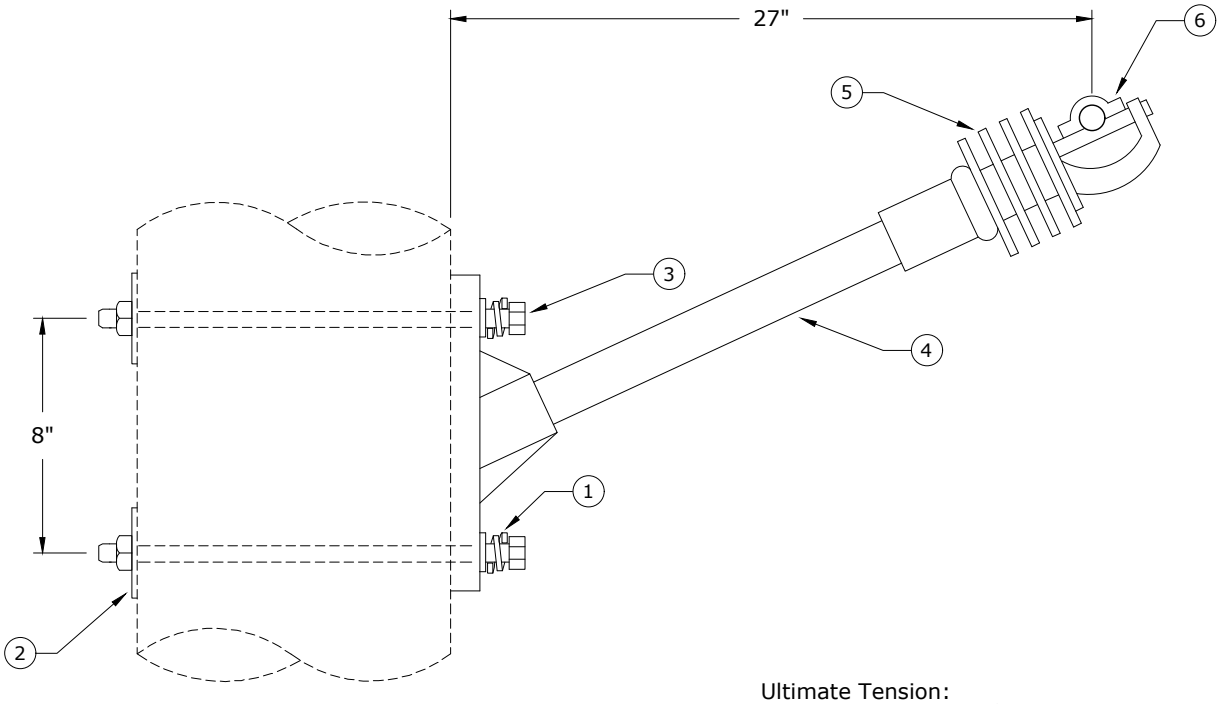

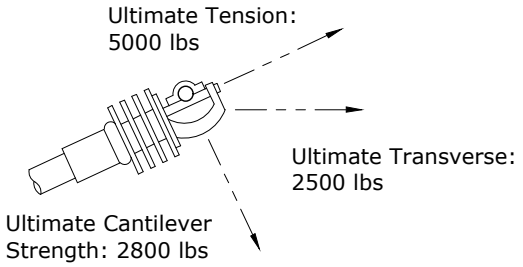

Note: Use only when uplift needs to be considered.

Rev. 4 - Updated material.

ITEM NO.	DESCRIPTION	PR58 QTY.	PR58 S/N
1	Washer, Lock, Spring, Double Coil, Galv., 5/8" ✡	2	2217
2	Washer, Curved, Square, Cast, 3" x 3" x 3/8" Thick x 13/16" Hole	2	1392
3	Bolt, Machine, 5/8" x 14", Galv., 12,400 lbs Ultimate Tensile ✡	2	156
4	Arm, Epoxy 27" 2500 lbs	1	42
5	Insulator, Clamp-Top 15 kV	1	760
6	Clamp, Wire, Insulated, 336 - 795 MCM	1	316

Clark Public Utilities

CONSTRUCTION STANDARDS

BASIC UNITS
SINGLE CLAMP-TOP
TWIGGY ARM 27"

REVISIONS

R	DATE	ENGR	OPS
2	2/23/00	HWH	MA
3	10/7/05	LB	AH
4	2/14/16	KJP	

PAGE: 1 of 1

PR58

CAD FILE: PR58

APP: ELM

DATE: 1/31/80

SECTION 200

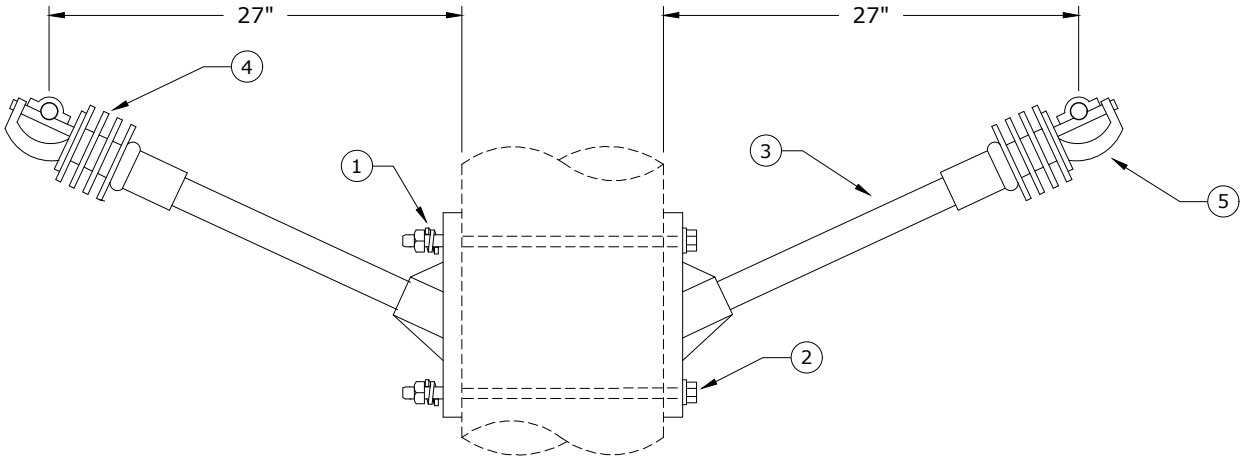

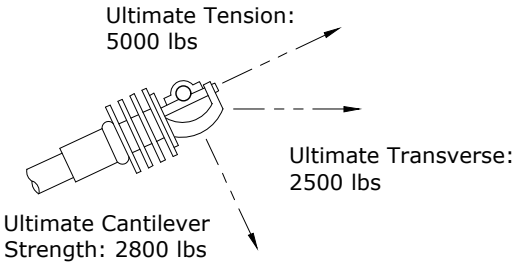

Note: Use only when uplift needs to be considered.

Rev. 4 - Updated material.

ITEM NO.	DESCRIPTION	PR59 QTY.	PR59 S/N
1	Washer, Lock, Spring, Double Coil, Galv., 5/8" ✡	2	2217
2	Bolt, Machine, 5/8" x 16", Galv., 12,400 lbs Ultimate Tensile ✡	2	157 ✡
3	Arm, Epoxy 27" 2500 lbs	2	42
4	Insulator, Clamp-Top 15 kV	2	760
5	Clamp, Wire, Insulated, 336 - 795 MCM	2	316

Clark Public Utilities

CONSTRUCTION STANDARDS

BASIC UNITS
DOUBLE CLAMP-TOP
TWIGGY ARM 27"

REVISIONS

R	DATE	ENGR	OPS
2	2/23/00	HWH	MA
3	10/7/05	LB	AH
4	2/24/16	KJP	

PAGE: 1 of 1

PR59

CAD FILE: PR59

APP: ELM

DATE: 1/31/80

SECTION 200

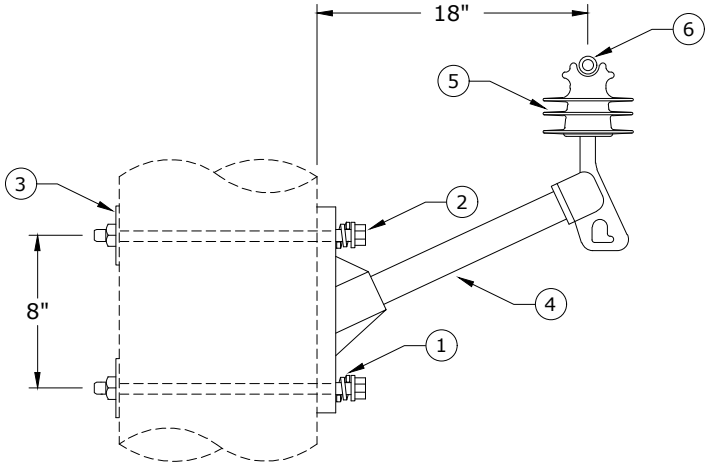

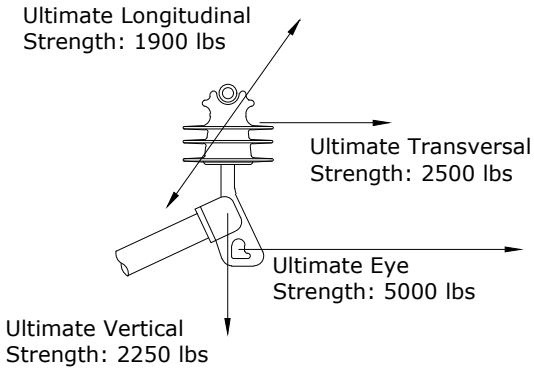

PR60 - for bare wire - use bare tie wire
PR60TREE - for tree wire - use covered tie wire

Note: See Std TI4 - Conductor Tying Guide - Section 400.

Rev. 5 - Eliminated porcelain insulator and added tie wire notes.

ITEM NO.	DESCRIPTION	PR60TREE		PR60	
		QTY.	S/N	QTY.	S/N
1	Washer, Lock, Spring Double Coil, Galv., 5/8"	2	2217	2	2217
2	Bolt, Machine, 5/8" x 16" Galv., 12,400 lbs Ultimate Tensile	2	157	2	157
3	Washer, Curved, Square, Cast, 3" x 3" x 3/8" Thick x 13/16" Hole	2	1392	2	1392
4	Arm, Epoxy 18" 2500 lbs	1	2504	1	2504
5	Insulator, Pin C Neck, Polymer	1	1968	1	1968 ✡
6	Wire, Tie, AL Annealed #4 SD	11✡	3012	10	1421

Clark Public Utilities

CONSTRUCTION STANDARDS

BASIC UNITS
SINGLE TWIGGY ARM 18"

REVISIONS

R	DATE	ENGR	OPS
3		REDRAWN	IN CAD
4	10/7/05	LB	AH
5	12/22/16	CM	DK

PAGE: 1 of 1

PR60,PR60TREE

CAD FILE: PR60

APP:

DATE: 2/16/01

SECTION 200

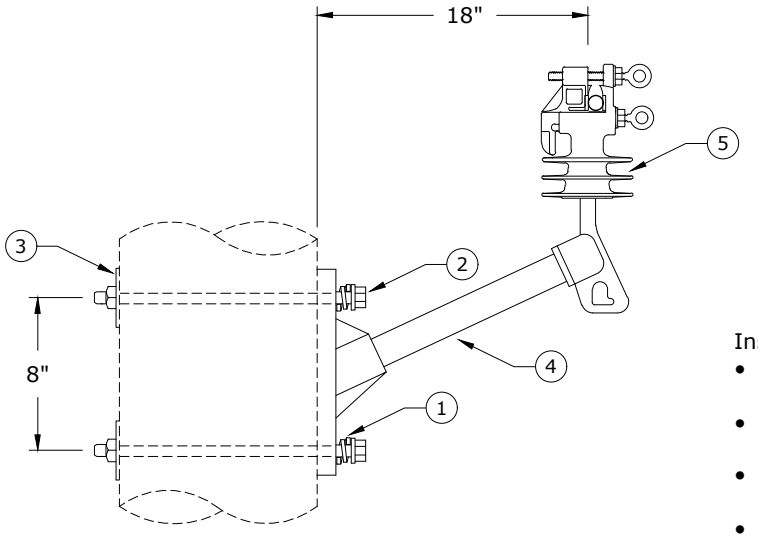

Installation:

- 1st tighten the bottom bolt until eye breaks off
- 2nd tighten the top bolt until eye breaks off
- Remove bolts with socket stick
- Do not reuse bolts after rings have broken off

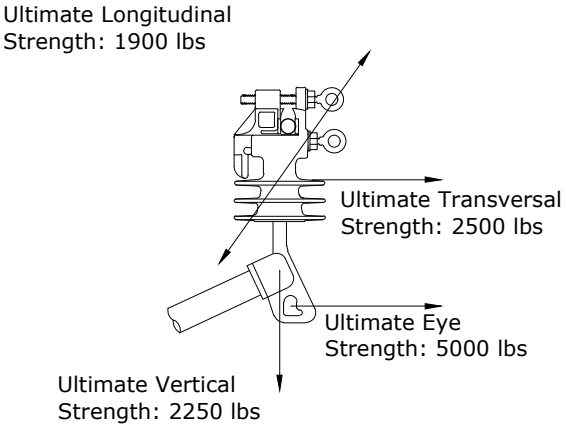

Note: Replacement vise-top insulator bolts S/N 2888.

ITEM NO.	DESCRIPTION	PR60V	
		QTY.	S/N
1	Washer, Lock, Spring, Double Coil, Galv., 5/8"	2	2217
2	Bolt, Machine, 5/8" x 16" Galv., 12,400 lbs. Ultimate Tensile	2	157
3	Washer, Curved, Square, Cast, 3" x 3" x 3/8" Thick x 13/16" Hole	2	1392
4	Arm, Epoxy 18" 2500 lbs	1	2504
5	Insulator, Vise-Top, Polymer	1	2439

Clark Public Utilities

CONSTRUCTION STANDARDS

BASIC UNITS
SINGLE TWIGGY ARM 18"
VISE-TOP INSULATOR

REVISIONS

R	DATE	ENGR	OPS

PAGE: 1 of 1

PR60V

CAD FILE: PR60V

APP: CM/DK
DATE: 12/22/16

SECTION 200

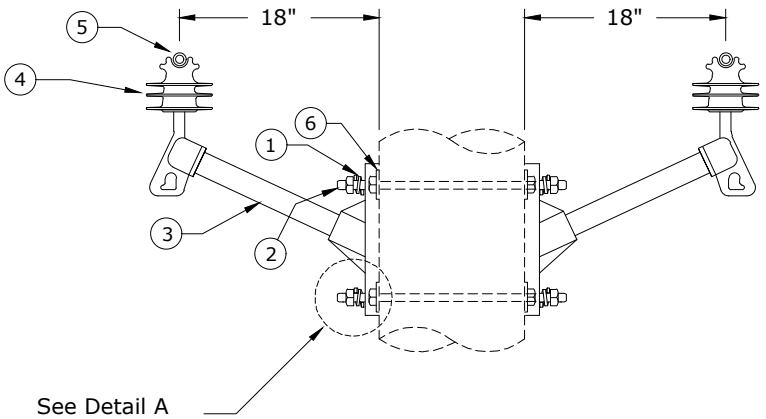

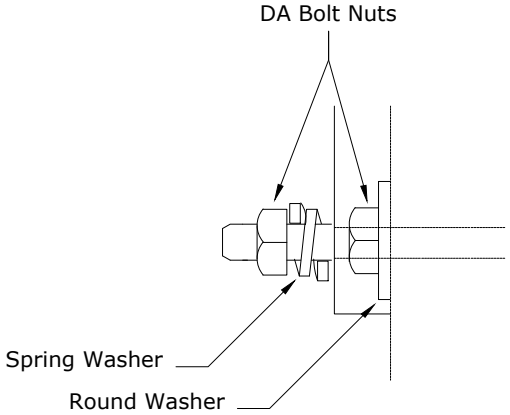

Detail A

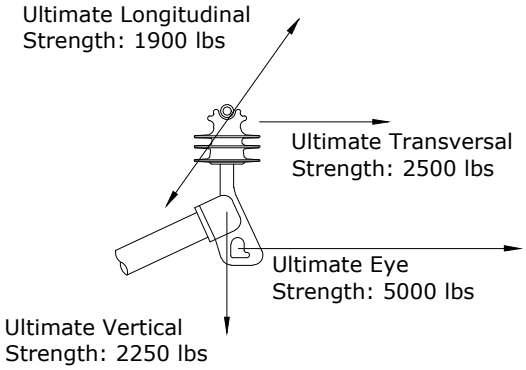

PR61 - for bare wire - use bare tie wire
PR61TREE - for tree wire - use covered tie wire

Note: See Std TI4 - Conductor Tying Guide - Section 400.

Rev. 5 - Eliminated porcelain insulator, added tie wire notes, and changed machine bolt to DA bolt.

ITEM NO.	DESCRIPTION	PR61TREE		PR61	
		QTY.	S/N	QTY.	S/N
1	Washer, Lock, Spring Double Coil, Galv., 5/8"	4 ✲	2217	4 ✲	2217
2	Bolt, Double Arm, 5/8" x 18" Galv, 12,400 lbs Ultimate Tensile	2 ✲	82 ✲	2 ✲	82 ✲
3	Arm, Epoxy 18" 2500 lbs	2	2504	2	2504
4	Insulator, Pin, C Neck, Polymer	2	1968	2	1968 ✲
5	Wire, Tie, AL Annealed #4 SD	22 ✲	3012	20	1421
6	Washer, Flat Round Galv., 5/8"	4	1395	4 ✲	1395

Clark Public Utilities

CONSTRUCTION STANDARDS

BASIC UNITS
DOUBLE TWIGGY
ARM 18"

REVISIONS

R	DATE	ENGR	OPS
3		REDRAWN	IN CAD
4	10/7/05	LB	AH
5	12/22/16	CM	DK

PAGE: 1 of 1

PR61,PR61TREE

CAD FILE: PR61

APP:

DATE: 2/16/01

SECTION 200

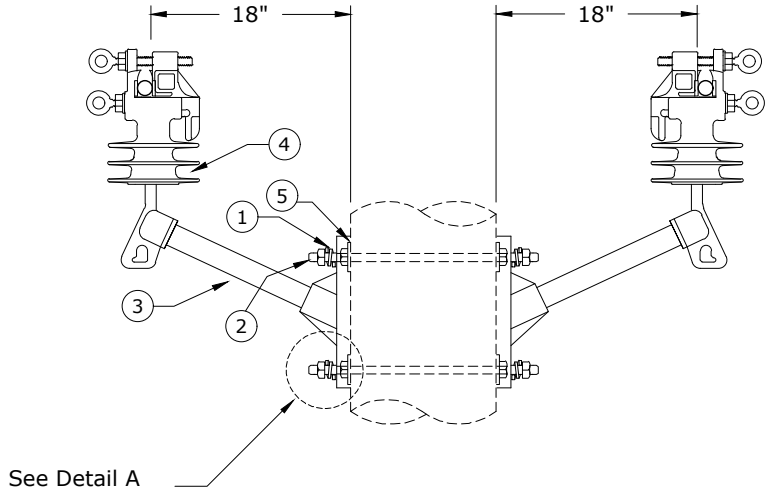

Installation:

- 1st tighten the bottom bolt until ring breaks off
- 2nd tighten the top bolt until ring breaks off
- Remove bolts with socket stick
- Do not reuse bolts after rings have broken off

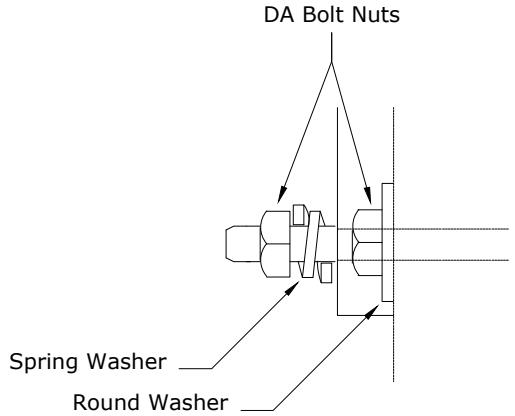

Detail A

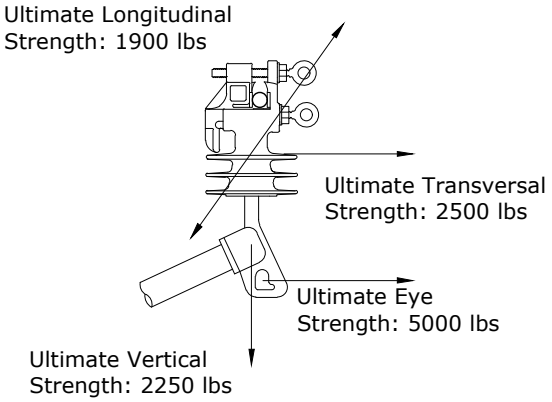

Note: Replacement vise-top insulator bolts S/N 2888.

ITEM NO.	DESCRIPTION	PR61V	
		QTY.	S/N
1	Washer, Lock, Spring, Double Coil, Galv., 5/8"	4	2217
2	Bolt, Double Arm, 5/8" x 18" Galv., 12,400 lbs Ultimate Tensile	2	82
3	Arm, Epoxy 18" 2500 lbs	2	2504
4	Insulator, Vise-Top, Polymer	2	2439
5	Washer, Flat Round Galv., 5/8"	4	1395

Clark Public Utilities

CONSTRUCTION STANDARDS

BASIC UNITS
DOUBLE TWIGGY ARM 18"
VISE-TOP INSULATOR

REVISIONS

R	DATE	ENGR	OPS

PAGE: 1 of 1

PR61V

CAD FILE: PR61V

APP: CM/DK

DATE: 12/22/16

SECTION 200

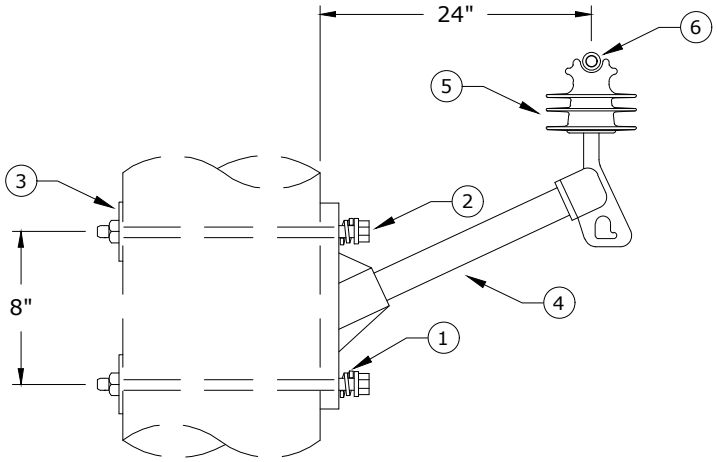

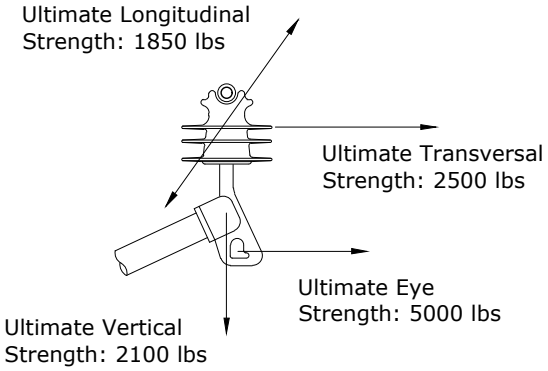

PR62 - for bare wire - use bare tie wire

PR62TREE - for tree wire - use covered tie wire

Note: See Std TI4 - Conductor Tying Guide - Section 400.

Rev. 2 - Corrected bolt spacing to 8".

ITEM NO.	DESCRIPTION	PR62TREE		PR62	
		QTY.	S/N	QTY.	S/N
1	Washer, Lock, Spring Double Coil, Galv., 5/8"	2	2217	2	2217
2	Bolt, Machine, 5/8" x 16", Galv., 12,400 lbs Ultimate Tensile	2	157	2	157
3	Washer, Curved, Square, Cast, 3" x 3" x 3/8" Thick x 13/16" Hole	2	1392	2	1392
4	Arm, Epoxy 24" 2500 lbs	1	2605	1	2605
5	Insulator, Pin, C Neck, Polymer	1	1968	1	1968 ✲
6	Wire, Tie, AL Annealed #4 SD	11✲	3012	10	1421

Clark Public Utilities

CONSTRUCTION STANDARDS

BASIC UNITS
SINGLE TWIGGY
ARM 24"

REVISIONS

R	DATE	ENGR	OPS
1	12/22/16	CM	DK
2	1/24/22	JDK	

PAGE: 1 of 1

PR62,PR62TREE

CAD FILE: PR62

APP: LB/AH
DATE: 10/7/05

SECTION 200

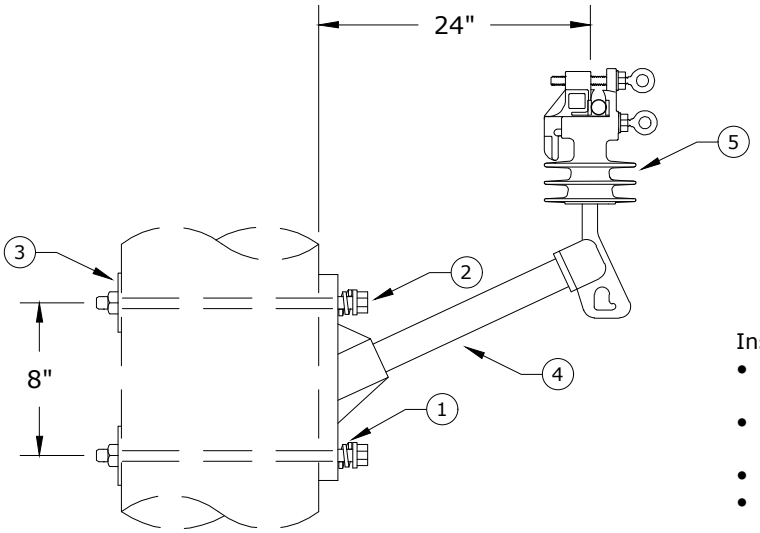

Installation:

- 1st tighten the bottom bolt until ring breaks off
- 2nd tighten the top bolt until ring breaks off
- Remove bolts with socket stick
- Do not reuse bolts after rings have broken off

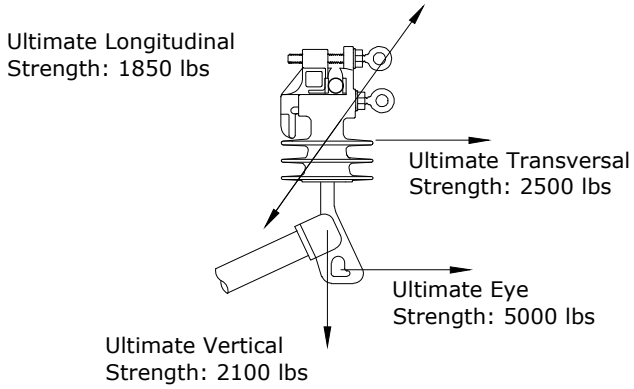

Note: Replacement vise-top insulator bolts S/N 2888.

ITEM NO.	DESCRIPTION	PR62V	
		QTY.	S/N
1	Washer, Lock, Spring Double Coil, Galv., 5/8"	2	2217
2	Bolt, Machine, 5/8" x 16" Galv., 12,400 lbs Ultimate Tensile	2	157
3	Washer, Curved, Square, Cast, 3" x 3" x 3/8" Thick x 13/16" Hole	2	1392
4	Arm, Epoxy 24" 2500 lbs	1	2605
5	Insulator, Vise-Top, Polymer	1	2439

Clark Public Utilities

CONSTRUCTION STANDARDS

BASIC UNITS
SINGLE TWIGGY ARM 24"
VISE-TOP INSULATOR

REVISIONS			
R	DATE	ENGR	OPS

PAGE: 1 of 1

PR62V

CAD FILE: PR62V

APP: CM/DK

DATE: 12/22/16

SECTION 200

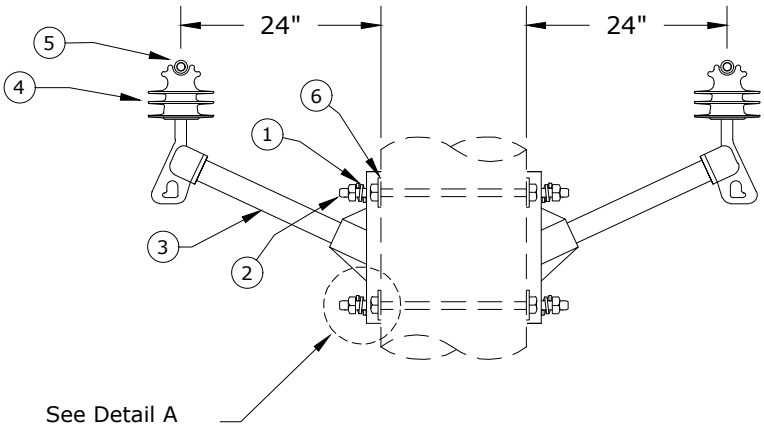

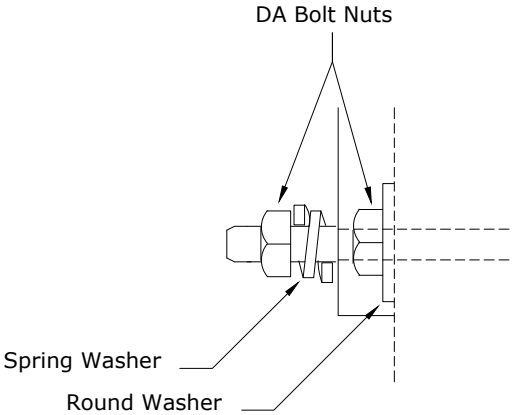

Detail A

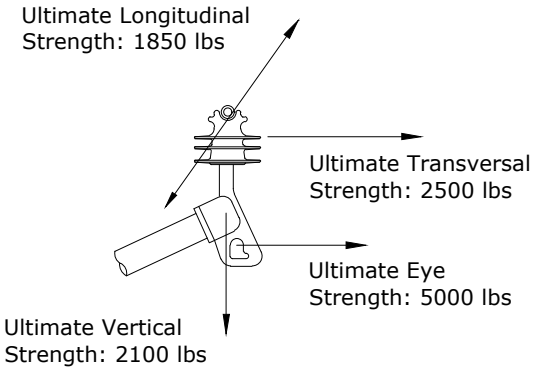

PR63 - for bare wire - use bare tie wire

PR63TREE - for tree wire - use covered tie wire

Note: See Std TI4 - Conductor Tying Guide - Section 400.

Rev. 1 - Eliminated porcelain insulator, added tie wire notes, and changed machine bolt to DA bolt.

ITEM NO.	DESCRIPTION	PR63TREE		PR63	
		QTY.	S/N	QTY.	S/N
1	Washer, Lock, Spring Double Coil, Galv., 5/8"	4 ✲	2217	4 ✲	2217
2	Bolt, Double Arm, 5/8" x 18" Galv., 12,400 lbs Ultimate Tensile	2 ✲	82 ✲	2 ✲	82 ✲
3	Arm, Epoxy 24" 2500 lbs	2	2605	2	2605
4	Insulator, Pin C Neck, Polymer	2	1968	2	1968 ✲
5	Wire, Tie, AL Annealed #4 SD	22 ✲	3012	20	1421
6	Washer, Flat Round Galv., 5/8"	4 ✲	1395	4 ✲	1395

Clark Public Utilities

CONSTRUCTION STANDARDS

BASIC UNITS
DOUBLE TWIGGY
ARM 24"

REVISIONS

R	DATE	ENGR	OPS
1	12/22/16	CM	DK

PAGE: 1 of 1

PR63,PR63TREE

CAD FILE: PR63

APP: LB/AH
DATE: 10/7/05

SECTION 200

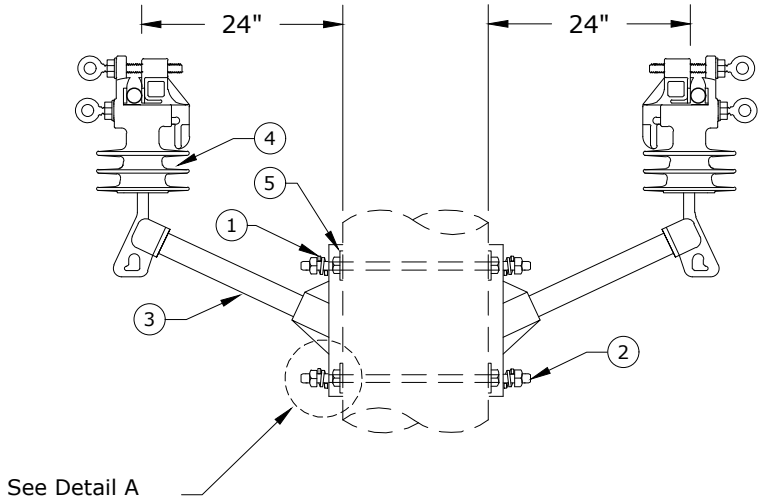

Installation:

- 1st tighten the bottom bolt until ring breaks off
- 2nd tighten the top bolt until ring breaks off
- Remove bolts with socket stick
- Do not reuse bolts after rings have broken off

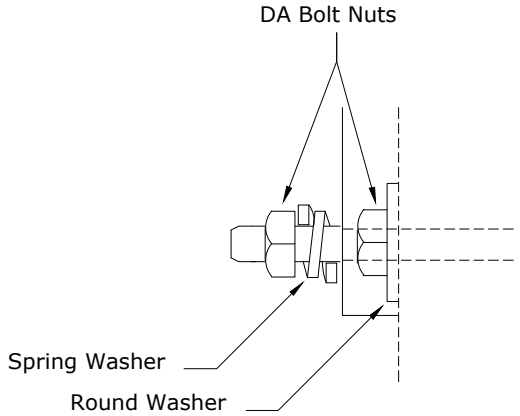

Detail A

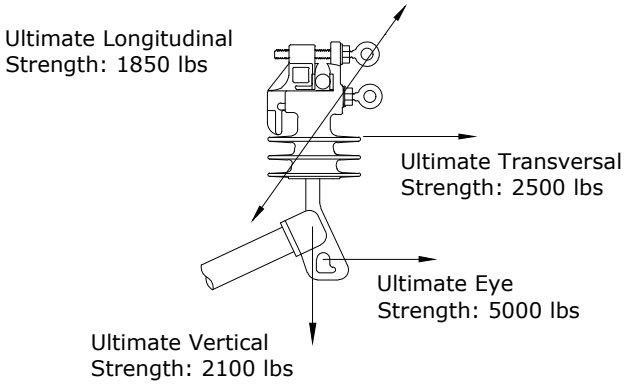

Note: Replacement vise-top insulator bolts S/N 2888.

ITEM NO.	DESCRIPTION	PR63V	
		QTY.	S/N
1	Washer, Lock, Spring, Double Coil, Galv., 5/8"	4	2217
2	Bolt, Double Arm, 5/8" x 18" Galv., 12,400 lbs Ultimate Tensile	2	82
3	Arm, Epoxy 24" 2500 lbs	2	2605
4	Insulator, Vise-Top, Polymer	2	2439
5	Washer, Flat Round Galv., 5/8"	4	1395

Clark Public Utilities

CONSTRUCTION STANDARDS

BASIC UNITS
DOUBLE TWIGGY ARM 24"
VISE-TOP INSULATORS

REVISIONS

R	DATE	ENGR	OPS

PAGE: 1 of 1

PR63V

CAD FILE: PR63V

APP: CM/DK

DATE: 12/22/16

SECTION 200

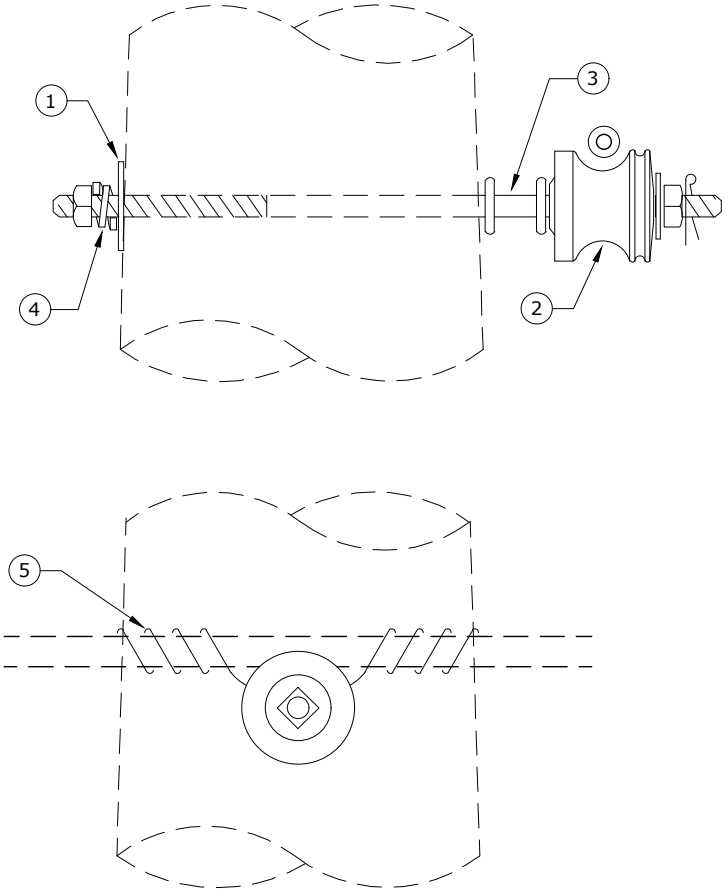

Note: See Std TI4 - Conductor Tying Guide - Section 400.

Rev. 6 - Updated material.

ITEM NO.	DESCRIPTION	S1 QTY.	S1 S/N
1	Washer, Curved, Square, Cast, 3" x 3" x 3/8" Thick x 13/16" Hole	1	1392
2	Insulator, Spool Clevis, Small, ANSI 53-2 Class	1	773
3	Bolt, Dble. Upset 5/8" x 14", Galv., 12,400 lbs Ultimate Tensile ✡	1	1580
4	Washer, Lock, Spring Double Coil, Galv., 5/8" ✡	1	2217
5	Wire, Tie, AL Annealed #4 SD	10	1421

Clark Public Utilities

CONSTRUCTION STANDARDS

BASIC UNITS
NEUTRAL
TANGENT SPOOL

REVISIONS

R	DATE	ENGR	OPS
3	2/23/00	HWH	MA
4	8/2/05	LB	AH
5	6/7/06	LB	AH
6	2/24/16	KJP	

PAGE: 1 of 1

S1

CAD FILE: S1

APP: ELM

DATE: 1/31/80

SECTION 200

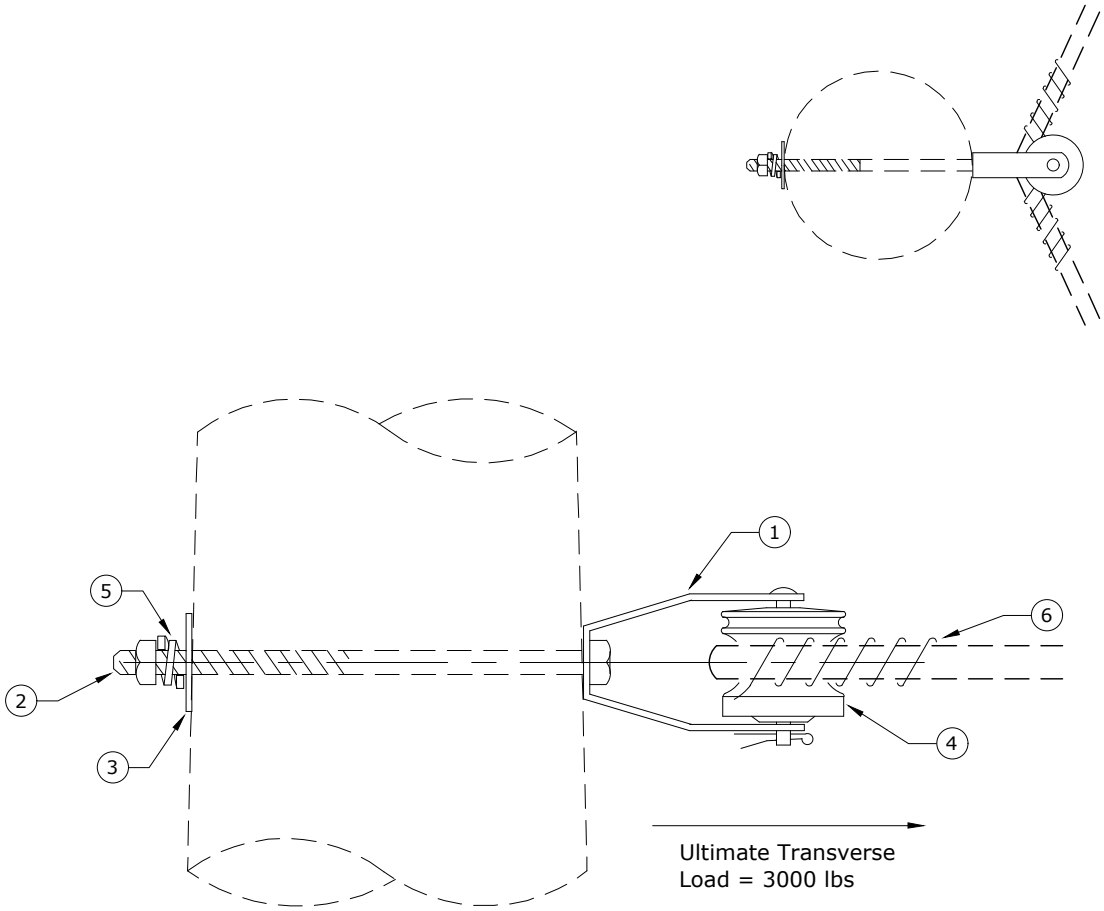

Rev. 6 - Updated material.

ITEM NO.	DESCRIPTION	S2	
		QTY.	S/N
1	Clevis, D.E. Insulator 1340	1	335
2	Bolt, Machine, 5/8" x 14", Galv., 12,400 lbs Ultimate Tensile ✲	1	156
3	Washer, Curved, Square, Cast, 3" x 3" x 3/8" Thick x 13/16" Hole	1	1392
4	Insulator, Spool Clevis, Small, ANSI 53-2 Class	1	773
5	Washer, Lock, Spring, Double Coil, Galv., 5/8" ✲	1	2217
6	Wire, Tie, AL Annealed #4 SD	10	1421

Clark Public Utilities

CONSTRUCTION STANDARDS

BASIC UNITS
NEUTRAL
ANGLE SPOOL

REVISIONS

R	DATE	ENGR	OPS
3	2/23/00	HWH	MA
4	8/2/05	LB	AH
5	6/7/06	LB	AH
6	2/24/16	KJP	

PAGE: 1 of 1

S2

CAD FILE: S2

APP: ELM

DATE: 1/31/80

SECTION 200

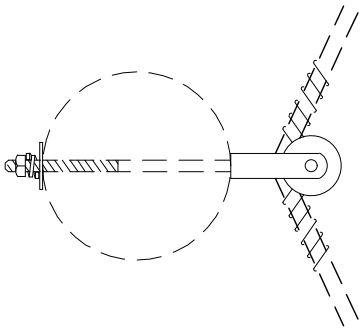

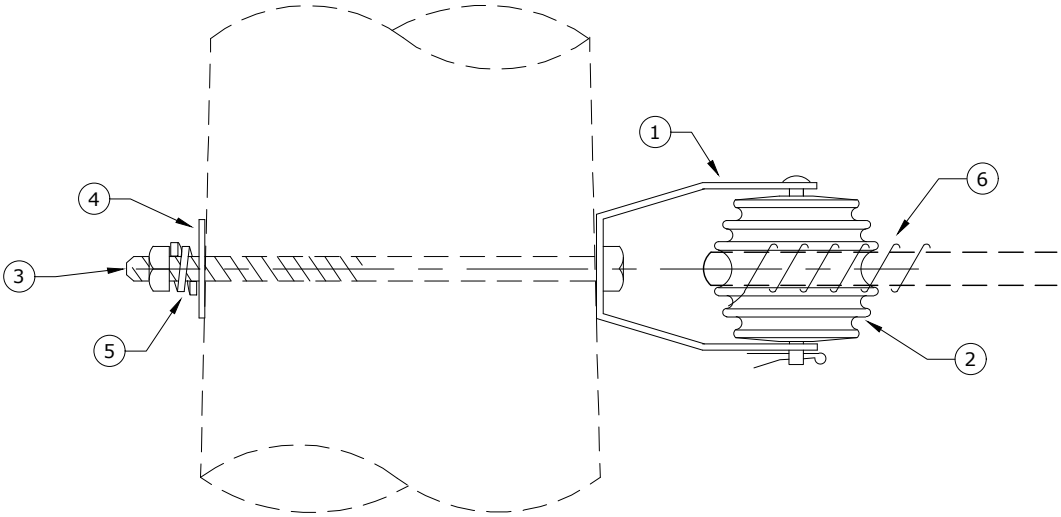

Note: For use with 397 and 795 neutral from 6º to 15º angle.

Rev. 1 - Updated material.

ITEM NO.	DESCRIPTION	S3 QTY.	S3 S/N
1	Clevis, D.E. Insulator 1344	1	336
2	Insulator, Spool Clevis Large, ANSI 53-5 Class	1	774
3	Bolt, Machine, 5/8" x 14", Galv., 12,400 lbs Ultimate Tensile ✲	1	156
4	Washer, Curved, Square, Cast, 3" x 3" x 3/8" Thick x 13/16" Hole	1	1392
5	Washer, Lock, Spring, Double Coil, Galv., 5/8" ✲	1	2217
6	Wire, Tie, AL Annealed #4 SD	10	1421

Clark Public Utilities

CONSTRUCTION STANDARDS

BASIC UNITS
HEAVY NEUTRAL
ANGLE SPOOL

REVISIONS

R	DATE	ENGR	OPS
1	2/24/16	KJP	

PAGE: 1 of 1

S3

CAD FILE: S3

APP: LB/AH
DATE: 1/21/08

SECTION 200

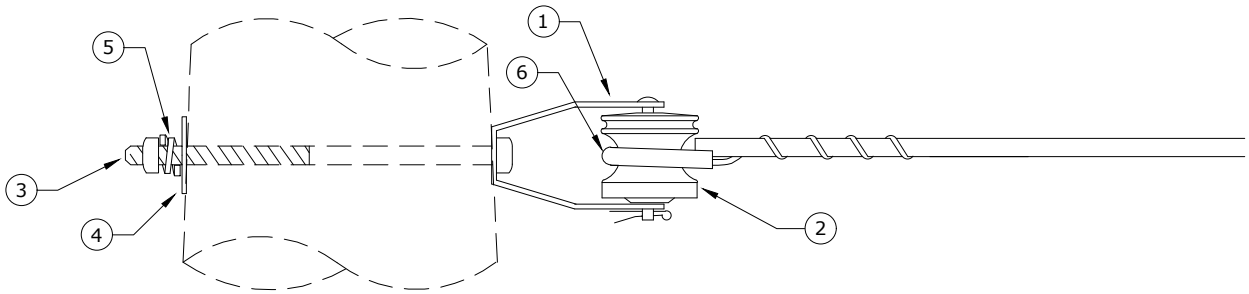

(SPOOL & CLEVIS)

Note: Preformed deadend rated for 1,000 lbs. max tension.

ITEM NO.	DESCRIPTION	S4	
		QTY.	S/N
1	Clevis, D.E. Insulator 1340	1	335
2	Insulator, Spool Clevis, Small, ANSI 53-2 Class	1	773
3	Bolt, Machine 5/8" x 14", Galv., 12,400 lbs Ultimate Tensile ✡	1	156
4	Washer, Curved, 3" x 3" X 3/8" Thick x 13/16" Hole	1	1392
5	Washer, Lock Spring, Double Coil, Galv., 5/8" ✡	1	2217
6	Preformed Slack Span Deadend #2 ACSR	1	2241

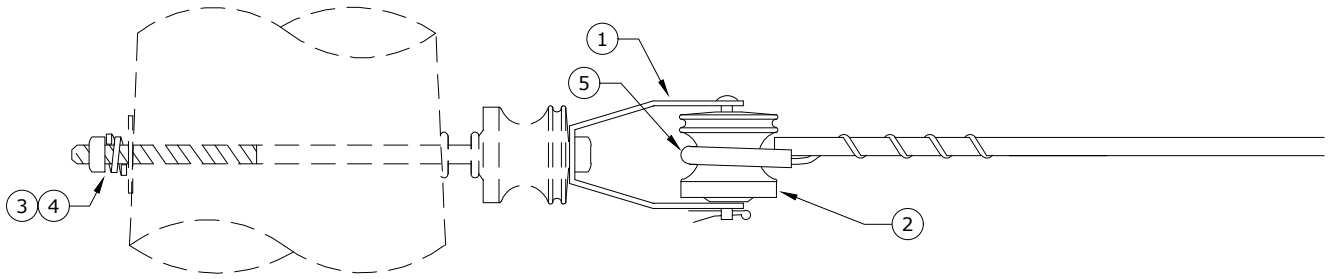

(SPOOL & CLEVIS WITH EXISTING S1)

Note: Preformed deadend rated for 1,000 lbs. max tension.

Rev. 5 - Updated material.

ITEM NO.	DESCRIPTION	S4A	
		QTY.	S/N
1	Clevis, D.E. Insulator 1340	1	335
2	Insulator, Spool Clevis, Small, ANSI 53-2 Class	1	773
3	Washer, Lock, Spring, Single Coil 5/8" Galv.	1	1403
4	Bolt, Double Upset, 5/8" x 14", Galv., 12,400 lbs Ultimate Tensile ✡	1	1580 ✡
5	Preformed Slack Span Deadend #2 ACSR	1	2241

Clark Public Utilities

CONSTRUCTION STANDARDS

BASIC UNITS
SLACK NEUTRAL
CONDUCTOR DEADENDS

REVISIONS

R	DATE	ENGR	OPS
2	2/23/00	HWH	MA
3	6/7/06	LB	AH
4	5/31/12	KJP	
5	2/24/16	KJP	

PAGE: 1 of 1

S4,S4A

CAD FILE: S4

APP: ELM
DATE: 1/31/80

SECTION 200

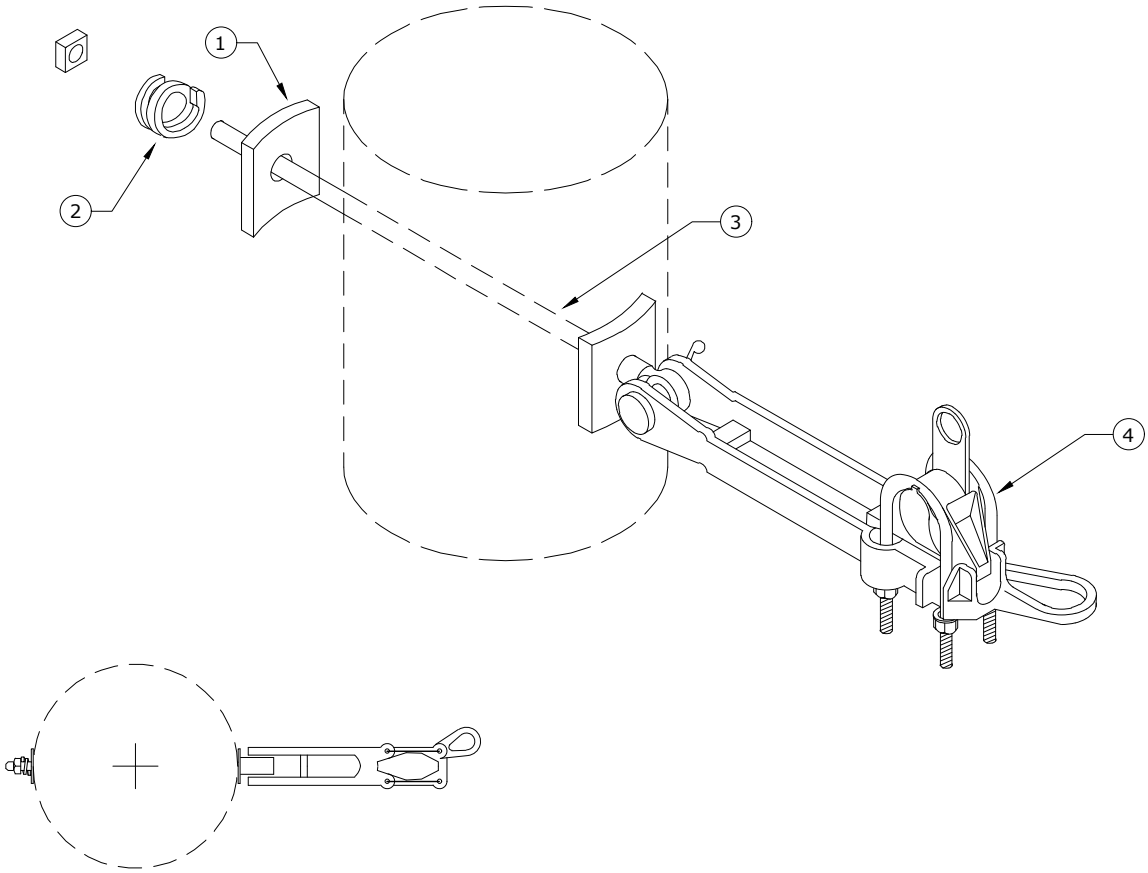

Rev. 4 - Updated material.

ITEM NO.	DESCRIPTION	S10 QTY.	S10 S/N
1	Washer, Curved, Square, Cast, 3" x 3" x 3/8" Thick x 13/16" Hole	2	1392
2	Washer, Lock, Spring, Double Coil, Galv., 5/8" ✡	1	2217
3	Bolt, Eye, 5/8" x 14", Galv., 12,400 lbs Ultimate Tensile ✡	1	108
4	Clamp, Strain Distribution, #2 - 397.5 MCM	1	302

Clark Public Utilities

CONSTRUCTION STANDARDS

BASIC UNITS
NEUTRAL DEADEND

REVISIONS

R	DATE	ENGR	OPS
2	2/23/00	HWH	MA
3	10/7/05	LB	AH
4	2/24/16	KJP	

PAGE: 1 of 1

S10

CAD FILE: S10

APP: ELM

DATE: 1/31/80

SECTION 200

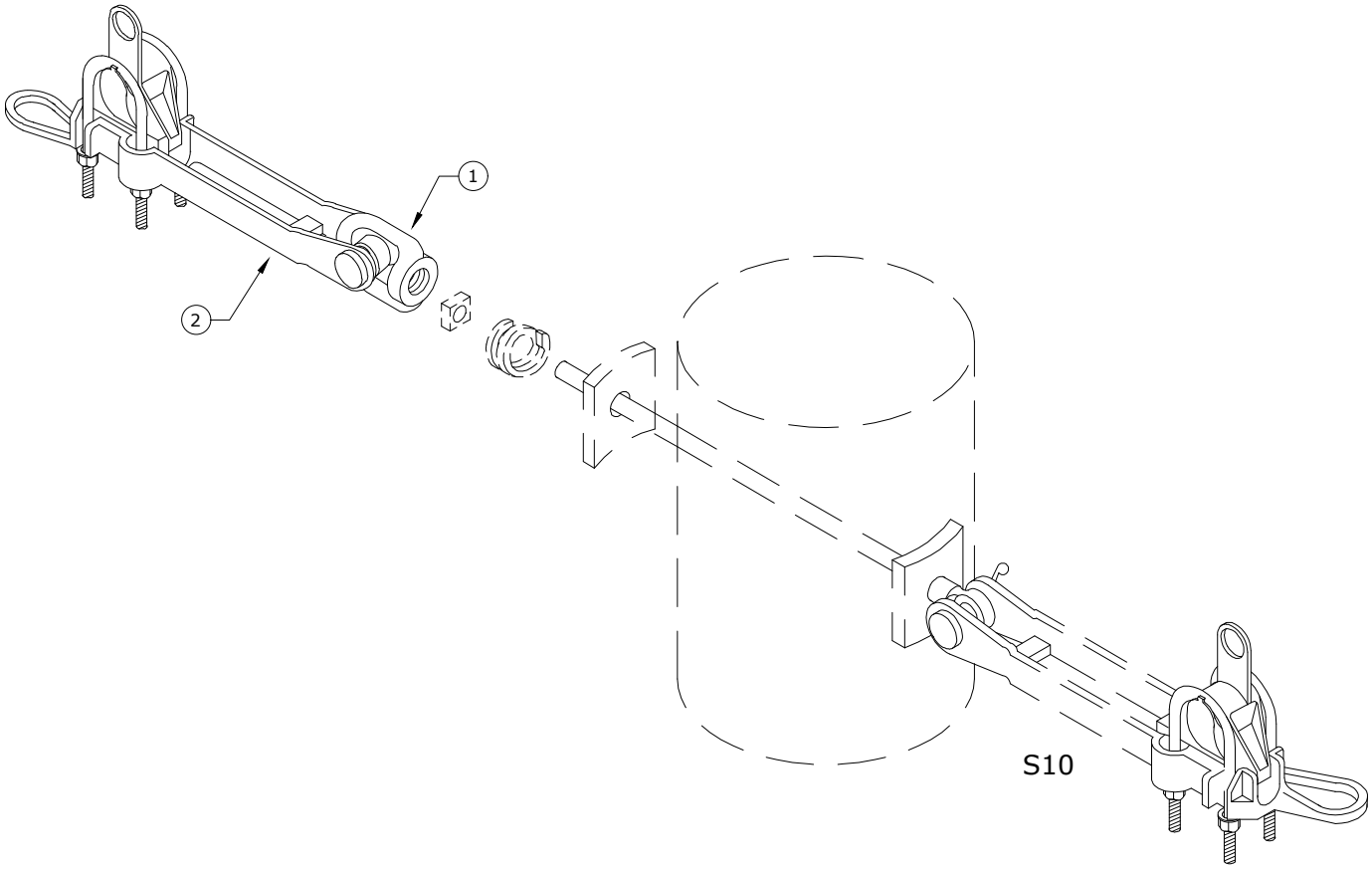

Rev. 4 - Updated material and drawing.

ITEM NO.	DESCRIPTION	S11 QTY.	S11 S/N
1	Nut, Eye Oval 5/8" Galv.	1	913
2	Clamp, Strain, Distribution, #2 - 397.5 MCM	1	302

Clark Public Utilities

CONSTRUCTION STANDARDS

BASIC UNITS
NEUTRAL DOUBLE DEADEND

REVISIONS

R	DATE	ENGR	OPS
2	2/23/00	HWH	MA
3	10/7/05	LB	AH
4	2/24/16	KJP	

PAGE: 1 of 1

S11

CAD FILE: S11

APP: ELM
DATE: 1/31/80

SECTION 200

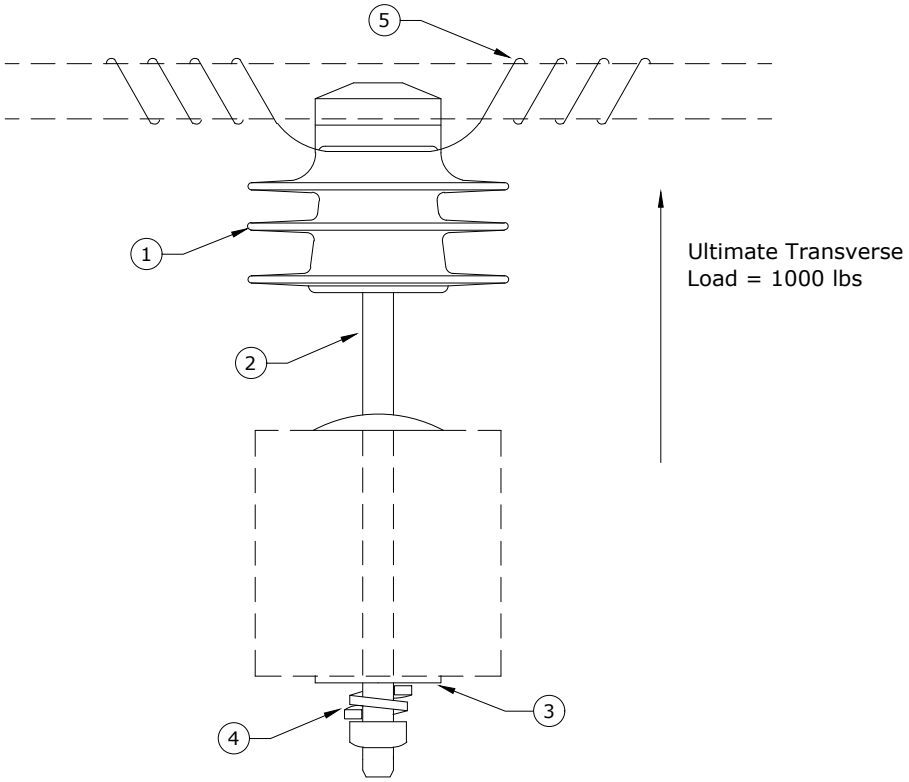

Notes:
1. See Std TI4 - Section 400 - Conductor Tying Guide.
2. Ultimate Cantilever Load=1,000 lbs.

Rev. 5 - Changed to white polymer insulator.

ITEM NO.	DESCRIPTION	S12 QTY.	S12 S/N
1	Insulator, Pin, C Neck, White Polymer	1	2656
2	Pin, Crossarm	1	961
3	Washer, Square Flat, 5/8", 2 1/4" x 2 1/4"	1	1412
4	Washer, Lock, Spring Double Coil, Galv., 5/8"	1	2217
5	Wire, Tie, Bare, AL Annealed #4 SD	10	1421

Clark Public Utilities

CONSTRUCTION STANDARDS

BASIC UNITS
SINGLE WHITE NEUTRAL INSULATOR
ON CROSSARM

REVISIONS

R	DATE	ENGR	OPS
3	2/23/00	HWH	MA
4	6/7/06	LB	AH
5	12/22/16	CM	DK

PAGE: 1 of 1

S12

CAD FILE: S12

APP: ELM

DATE: 1/31/80

SECTION 200

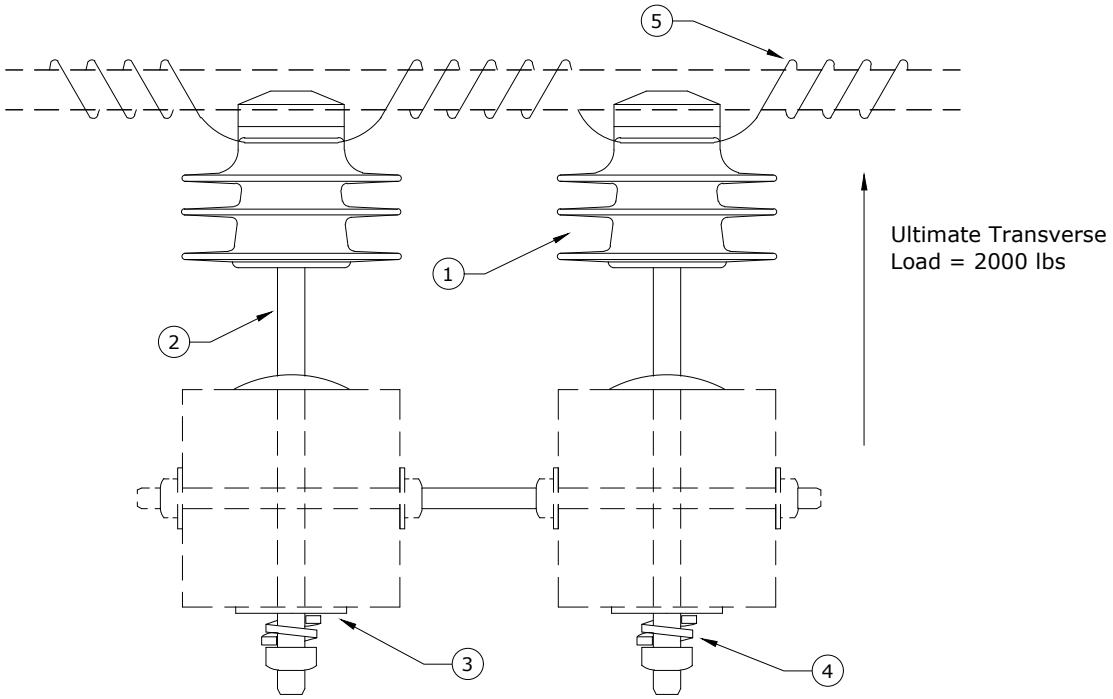

Notes:
1. See Std TI5 Section 400 - Conductor Tying Guide.
2. Ultimate Cantilever Load=2,000 lbs.

Rev. 5 - Changed to white polymer insulator.

ITEM NO.	DESCRIPTION	S13 QTY.	S13 S/N
1	Insulator, Pin, C Neck, White Polymer	2	2656
2	Pin, Crossarm	2	961
3	Washer, Square Flat, 5/8", 2 1/4" x 2 1/4"	2	1412
4	Washer, Lock, Spring, Double Coil, Galv., 5/8"	2	2217
5	Wire, Tie, Bare, AL Annealed #4 SD	20	1421

Clark Public Utilities

CONSTRUCTION STANDARDS

BASIC UNITS
DOUBLE WHITE NEUTRAL INSULATORS
ON CROSSARMS

REVISIONS

R	DATE	ENGR	OPS
3	2/23/00	HWH	MA
4	6/7/06	LB	AH
5	12/22/16	CM	DK

PAGE: 1 of 1

S13

CAD FILE: S13

APP: ELM
DATE: 1/31/80

SECTION 200

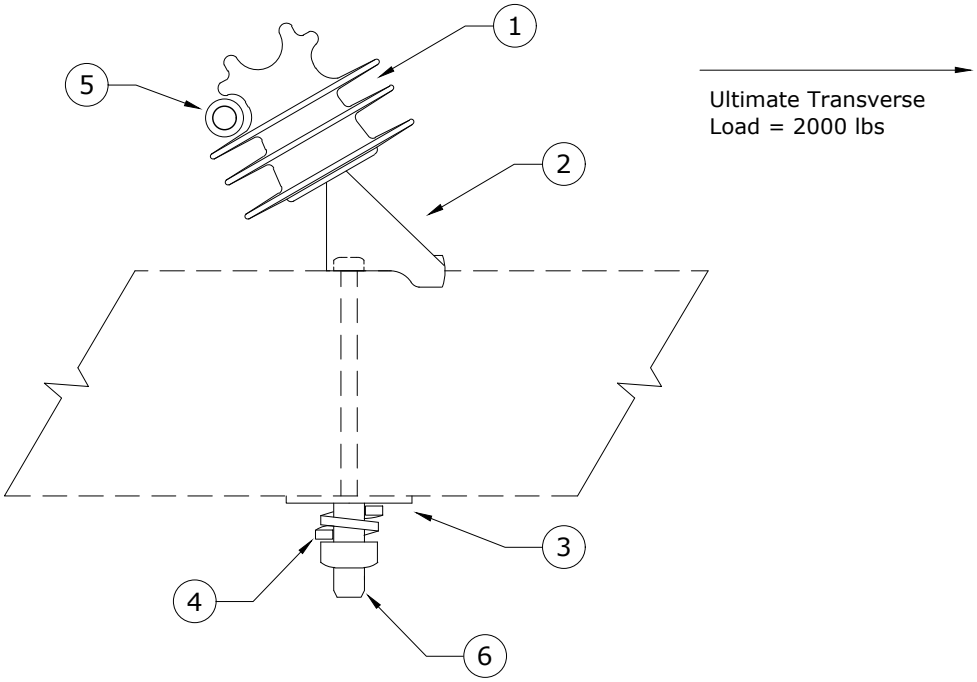

Note: See Std TI4 - Section 400 - Conductor Tying Guide.

Rev. 1 - Changed to white polymer insulator.

ITEM NO.	DESCRIPTION	S14	
		QTY.	S/N
1	Insulator, Pin, C Neck, White Polymer	1	2656
2	Pin, Angle Crossarm	1	2658
3	Washer, Square Flat, 5/8", 2 1/4" x 2 1/4"	1	1412
4	Washer, Lock, Spring Double Coil, Galv., 5/8"	1	2217
5	Wire, Tie, Bare, AL Annealed #4 SD	10	1421
6	Bolt, Machine, 5/8" x 7" Galv., 12,400 lbs Ultimate Tensile	1	2606 ✲

Clark Public Utilities

CONSTRUCTION STANDARDS

BASIC UNITS
SINGLE ANGLED WHITE NEUTRAL INSULATOR
ON CROSSARM

REVISIONS

R	DATE	ENGR	OPS
1	12/22/16	CM	DK

PAGE: 1 of 1

S14

CAD FILE: S14

APP: LB/AH

DATE: 6/7/06

SECTION 200

310
1Ø Distribution
Up to 2/0 ACSR

2/11/2025

~	A1,-TREE	1Ø Tangent Pole - 0° to 5°
~	A2,-TREE	1Ø Angle Pole - 6° to 30°
C	A4A,-TREE	1Ø 8' Crossarm - High Neutral - 0° to 5°
C	A5A,-TREE	1Ø 8' Double Crossarm - High Neutral - 6° to 30°
~	A41	1Ø Vertical Deadend
~	A42	1Ø Vertical Deadend w/ Extension Link
~	A47,-TREE	1Ø Vertical Double Deadend
~	A48A	8' Pre-assembled Deadend - High Neutral
~	A49A,-TREE	8' Pre-assembled Double Deadend - High Neutral

N New Standard
R Redrawn Standard
C Changed Standard
~ No Change

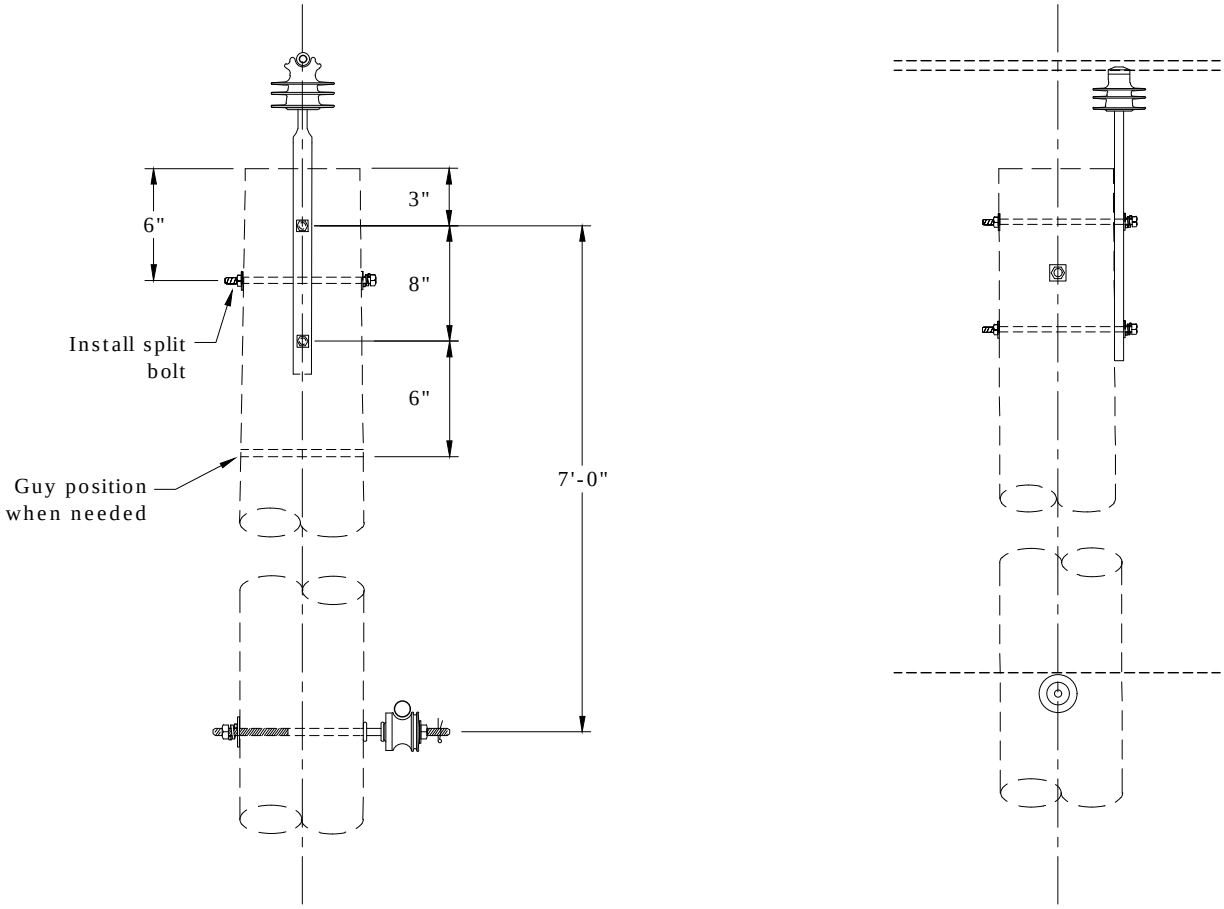

Avian Safe

Note: Maximum line angle calculated for 2,000 lbs. MWT and 250-ft ruling span.

Rev. 3 - Eliminated porcelain pin insulator and added avian note.

Clark Public Utilities

CONSTRUCTION STANDARDS

1Ø TANGENT POLE
0° TO 5°
2/0 ACSR MAX WIRE

REVISIONS

R	DATE	ENGR	OPS
1	3/02	REDRAWN	IN CAD
2	3/20/08	CM	AH
3	6/13/17	CM	DK

PAGE:		CAD FILE:	APP: ELM	SECTION
1 of 2	A1,A1TREE	A1	DATE: 1/31/80	310

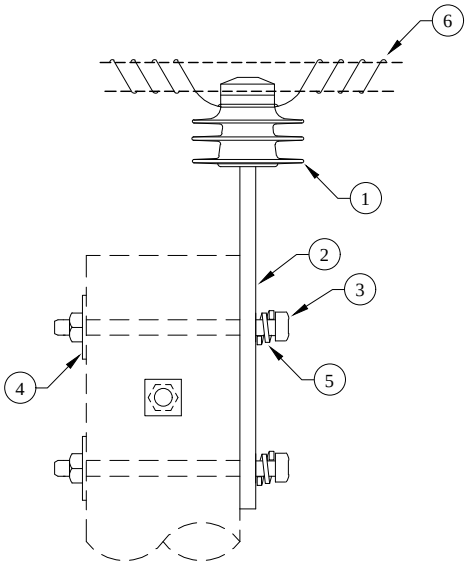

PR1,PR1TREE

S1

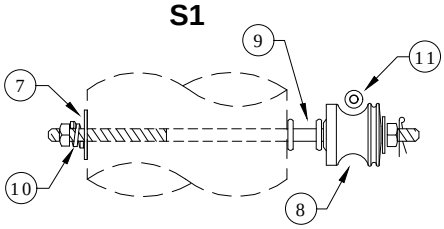

Neutral

Note: Maximum line angle calculated for 2,000 lbs. MWT and 250-ft ruling span.

Rev. 3 - Eliminated porcelain pin insulator and added avian note.

ITEM NO.	DESCRIPTION	A1TREE PR1TREE QTY.	A1TREE PR1TREE S/N	A1 PR1 QTY.	A1 PR1 S/N
1	Insulator, Pin, C Neck, Polymer	1	1968	1	1968 ✡
2	Pin, Pole Top	1	962	1	962
3	Bolt, Machine, 5/8" x 12" Galv., 12,400 lbs Ultimate Tensile	2	155	2	155
4	Washer, Curved, Square, Cast, 3" x 3" x 3/8" Thick x 13/16" Hole	2	1392	2	1392
5	Washer, Lock, Spring, Double Coil, Galv., 5/8"	2	2217	2	2217
6	Wire, Tie, AL Annealed #4 SD	11	3012	10	1421

ITEM NO.	DESCRIPTION	S1 QTY.	S1 S/N	S1 QTY.	S1 S/N
7	Washer, Curved, Square, Cast, 3" x 3" x 3/8" Thick x 13/16" Hole	1	1392	1	1392
8	Insulator, Spool Clevis, Small, ANSI 53-2 Class ✡	1	773	1	773
9	Bolt, Double Upset, 5/8" x 14", Galv., 12,400 lbs Ultimate Tensile	1	1580	1	1580
10	Washer, Lock, Spring, Double Coil, Galv., 5/8"	1	2217	1	2217
11	Wire, Tie, AL Annealed #4 SD	10	1421	10	1421

Clark Public Utilities

CONSTRUCTION STANDARDS

1Ø TANGENT POLE
0° TO 5°
2/0 ACSR MAX WIRE

REVISIONS

R	DATE	ENGR	OPS
1	3/02	REDRAWN	IN CAD
2	3/20/08	CM	AH
3	6/13/17	CM	DK

PAGE: 2 of 2

A1,A1TREE

CAD FILE: A1

APP: ELM
DATE: 1/31/80

SECTION 310

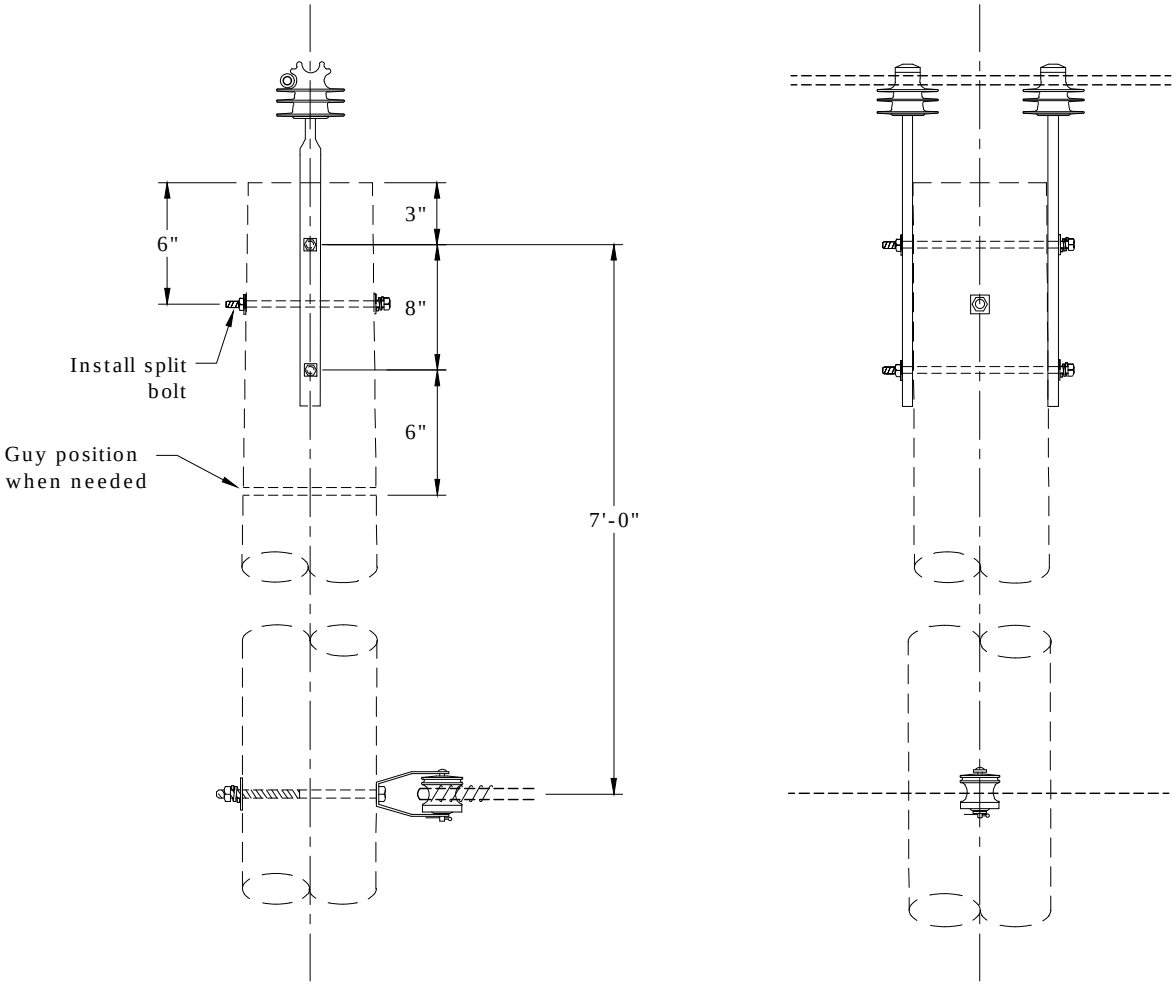

TOP VIEW

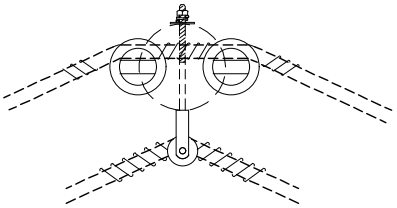

Avian Safe

Note: Maximum line angle calculated for 2,000 lbs. MWT and 250-ft ruling span.

Rev. 3 - Eliminated porcelain pin insulators and added avian note.

Clark Public Utilities

CONSTRUCTION STANDARDS

1Ø ANGLE POLE
6° TO 30°
2/0 ACSR MAX WIRE

REVISIONS

R	DATE	ENGR	OPS
1	3/02	REDRAWN	IN CAD
2	3/20/08	CM	AH
3	6/13/17	CM	DK

PAGE:		CAD FILE:	APP: ELM	SECTION
1 of 2	A2,A2TREE	A2	DATE: 1/31/80	310

PR2,PR2TREE

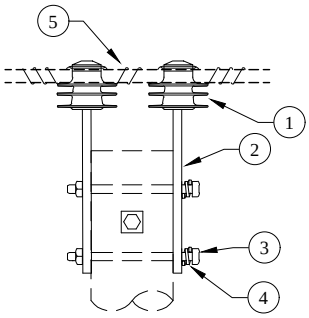

S2

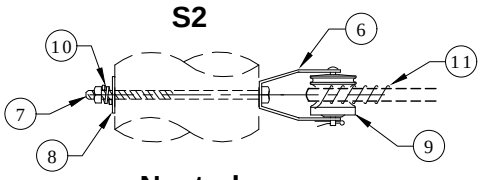

Neutral

Rev. 3 - Eliminated porcelain pin insulators and added avian note.

ITEM NO.	DESCRIPTION	A2TREE PR2TREE QTY.	A2TREE PR2TREE S/N	A2 PR2 QTY.	A2 PR2 S/N
1	Insulator, Pin, C Neck, Polymer	2	1968	2	1968 ✡
2	Pin, Pole Top	2	962	2	962
3	Bolt, Machine, 5/8" x 14", Galv., 12,400 lbs. Ultimate Tensile	2	156	2	156
4	Washer, Lock, Spring, Double Coil., Galv., 5/8"	2	2217	2	2217
5	Wire, Tie, AL Annealed #4 SD	22✡	3012	20	1421

ITEM NO.	DESCRIPTION	S2 QTY.	S2 S/N	S2 QTY.	S2 S/N
6	Clevis, D.E. Insulator 1340	1	335	1	335
7	Bolt, Machine, 5/8" x 14", Galv., 12,400 lbs. Ultimate Tensile	1	156	1	156
8	Washer, Curved, Square, Cast, 3" x 3" x 3/8" Thick x 13/16" Hole	1	1392	1	1392
9	Insulator, Spool Clevis, Small, ANSI 53-2 Class ✡	1	773	1	773
10	Washer, Lock, Spring, Double Coil., Galv., 5/8"	1	2217	1	2217
11	Wire, Tie, AL Annealed #4 SD	10	1421	10	1421

Clark Public Utilities

CONSTRUCTION STANDARDS

1Ø ANGLE POLE
6° TO 30°
2/0 ACSR MAX WIRE

REVISIONS

R	DATE	ENGR	OPS
1	3/02	REDRAWN	IN CAD
2	3/20/08	CM	AH
3	6/13/17	CM	DK

PAGE: 2 of 2

A2,A2TREE

CAD FILE: A2

APP: ELM

DATE: 1/31/80

SECTION 310

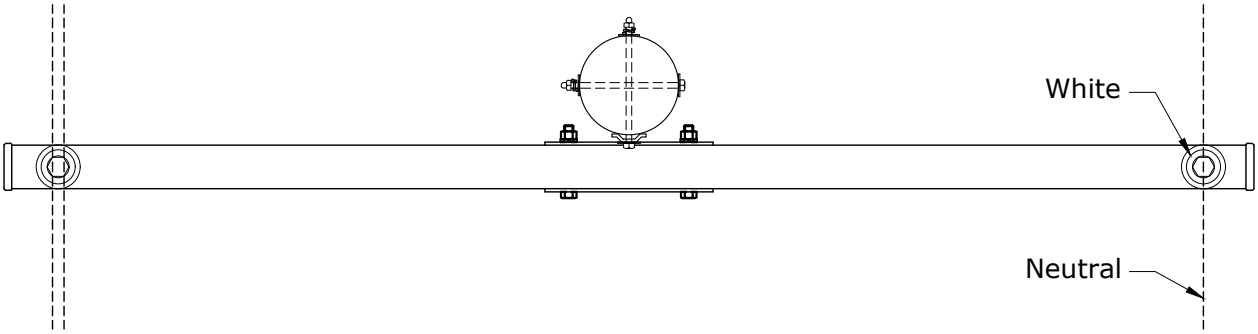

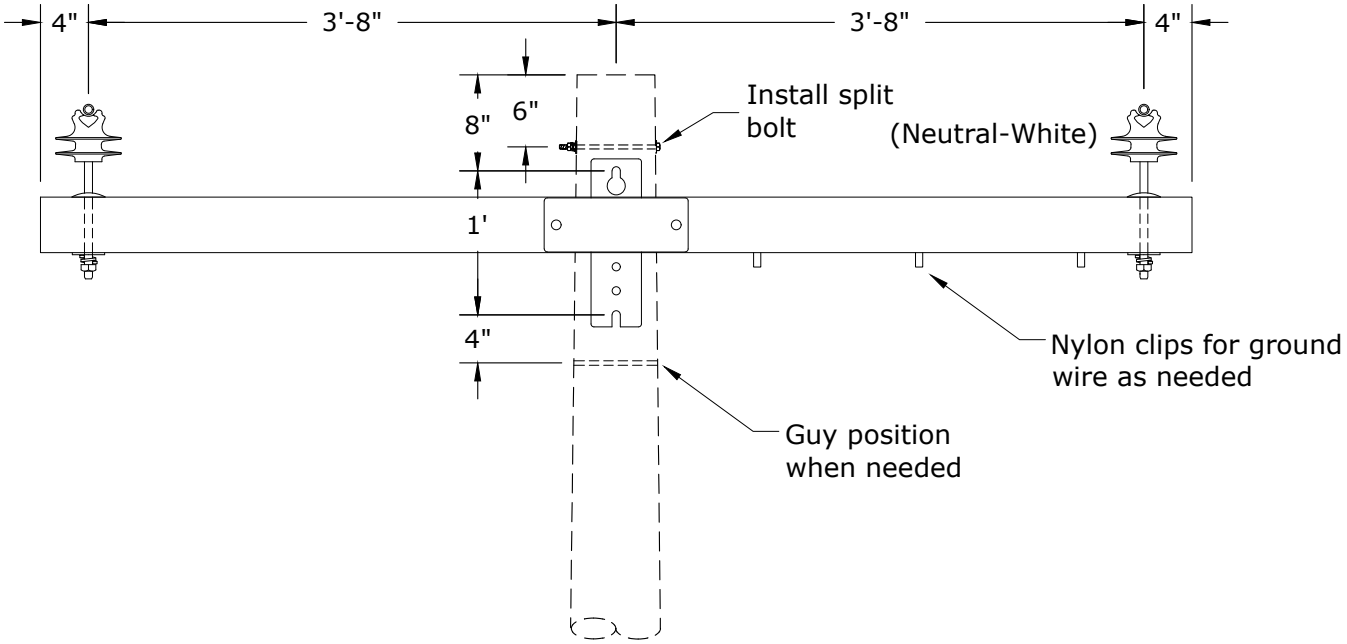

Avian Safe

Notes:

1. Maximum line angle calculated for 2,000 lb MWT and 250-ft ruling span.
2. This framing is for clearance limited situations only.

Rev. 4 - Changed to fiberglass crossarm.

Clark Public Utilities

CONSTRUCTION STANDARDS

1Ø SINGLE 8' CROSSARM
HIGH NEUTRAL - 0° TO 5°
2/0 ACSR MAX WIRE

REVISIONS

R	DATE	ENGR	OPS
1	3/02	REDRAWN	IN CAD
2	3/20/08	CM	AH
3	6/13/17	CM	DK
4	2/11/25	CM	GM

PAGE:	CAD FILE:	APP: ELM	SECTION
1 of 2	A4A	DATE: 1/31/80	310

A4A,A4ATREE

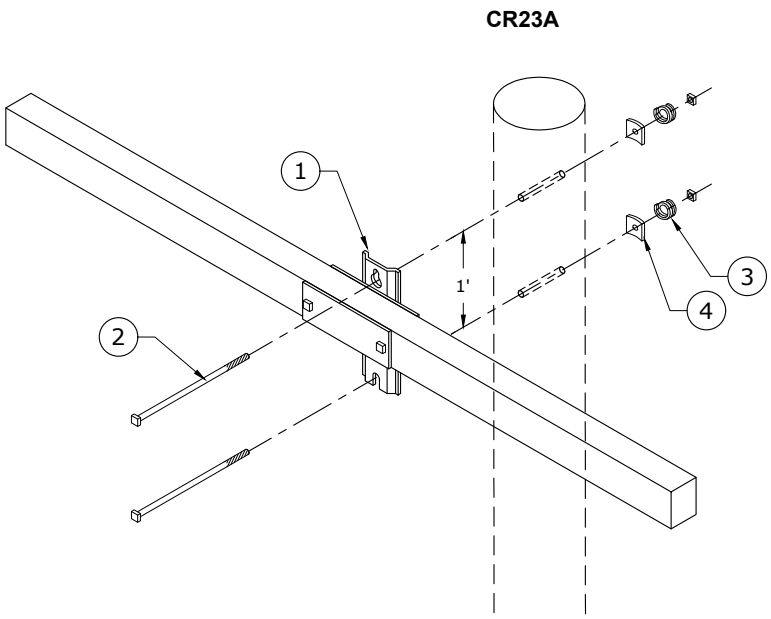

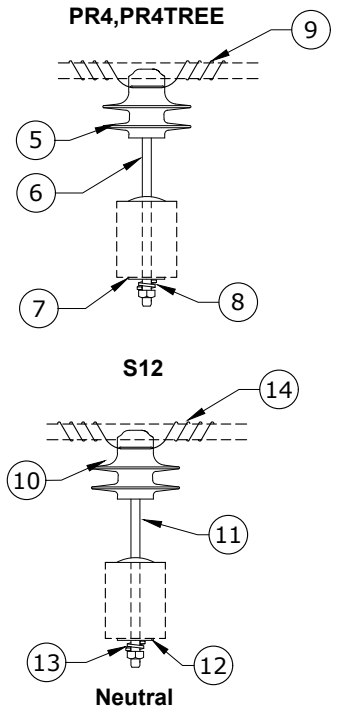

Rev. 4 - Changed to fiberglass crossarm.

ITEM NO	DESCRIPTION	A4ATREE CR23A ✲ QTY	A4ATREE CR23A ✲ S/N	A4A CR23A QTY	A4A CR23A S/N
1	Crossarm, Distribution, Fiberglass, 8' Long x 3-5/8" Wide x 4-5/8" High	1	3030	1	3030
2	Bolt, Machine, 5/8" x 14", Galv, 12,400 lb Ultimate Tensile	2	156	2	156
3	Washer, Lock, Spring, Double Coil, Galv, 5/8"	2	2217	2	2217
4	Washer, Curved, Square, Cast, 3" x 3" x 3/8" Thick x 13/16" Hole	2	1392	2	1392
ITEM NO	DESCRIPTION	PR4TREE QTY	PR4TREE S/N	PR4 QTY	PR4 S/N
5	Insulator, Pin, C Neck, Polymer	1	1968	1	1968
6	Pin, Crossarm	1	961	1	961
7	Washer, Square Flat 5/8", 2 1/4" x 2 1/4"	1	1412	1	1412
8	Washer, Lock, Spring, Double Coil, Galv 5/8"	1	2217	1	2217
9	Wire, Tie, AL Annealed #4 SD	11	3012	10	1421
ITEM NO	DESCRIPTION	S12 QTY	S12 S/N	S12 QTY	S12 S/N
10	Insulator, Pin, C Neck, White Polymer	1	2656	1	2656
11	Pin, Crossarm	1	961	1	961
12	Washer, Square Flat 5/8", 2 1/4" x 2 1/4"	1	1412	1	1412
13	Washer, Lock, Spring, Double Coil, Galv 5/8"	1	2217	1	2217
14	Wire, Tie, AL Annealed #4 SD	10	1421	10	1421
ITEM NO	DESCRIPTION	Additional Materials QTY	Additional Materials S/N	Additional Materials QTY	Additional Materials S/N
15	Clips, Nylon, 1/4"	3	2996	3	2996
16	Screw, Self-tapping, #10 x 1", Hex Washer Head, TEK, Stainless Steel	3	2997	3	2997

Clark Public Utilities

CONSTRUCTION STANDARDS

1Ø 8' CROSSARM
HIGH NEUTRAL - 0° TO 5°
2/0 ACSR MAX WIRE

REVISIONS

R	DATE	ENGR	OPS
1	3/02	REDRAWN	IN CAD
2	3/20/08	CM	AH
3	6/13/17	CM	DK
4	2/11/25	CM	GM

PAGE: 2 of 2

A4A,A4ATREE

CAD FILE: A4A

APP: ELM
DATE: 1/31/80

SECTION 310

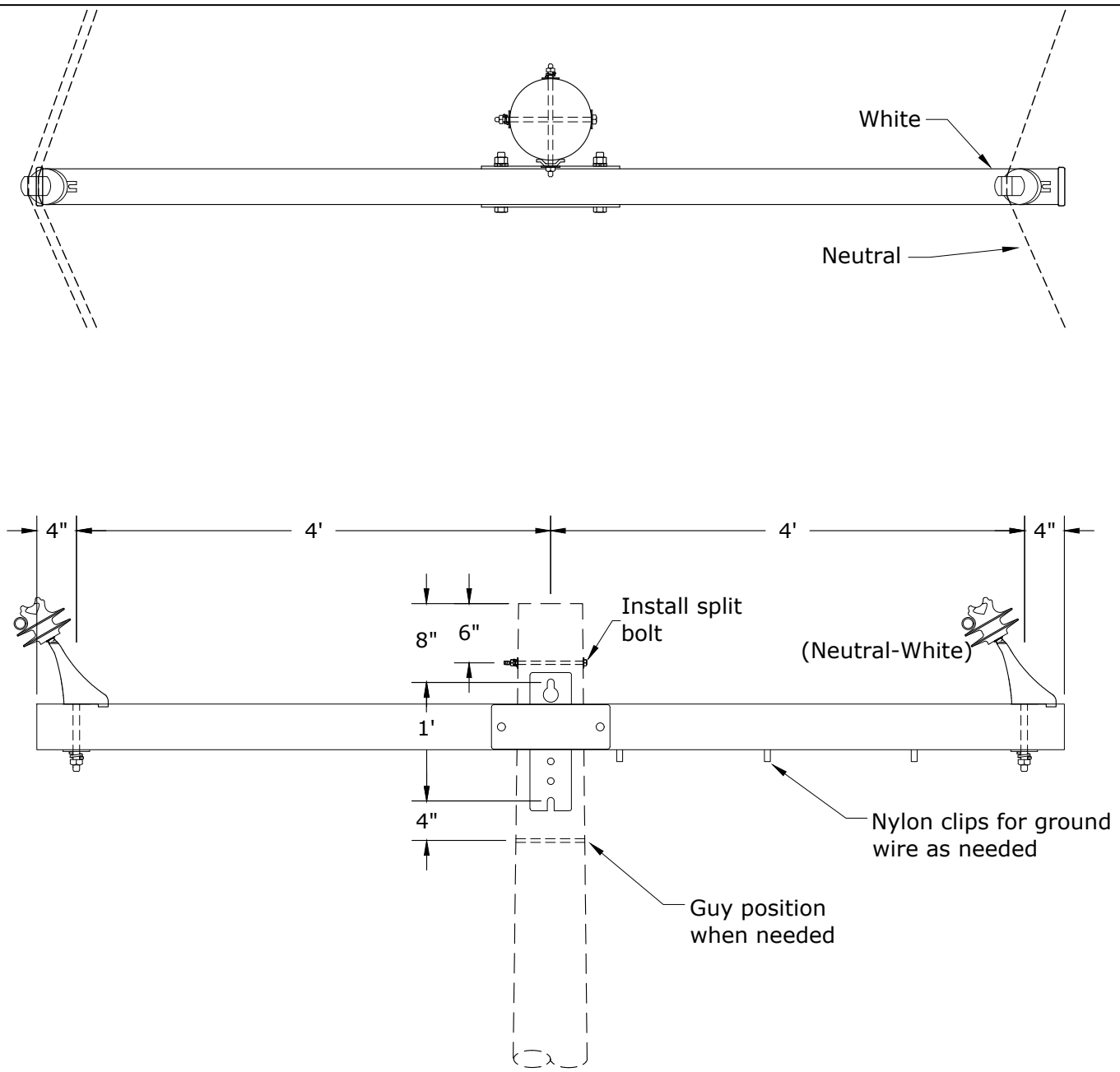

Avian Safe

Notes:

1. Maximum line angle calculated for 2,000 lb MWT and 250-ft ruling span.
2. This framing is for clearance limited situations only.

Rev. 4 - Changed to single fiberglass crossarm with angled pin.

Clark Public Utilities

CONSTRUCTION STANDARDS

1Ø SINGLE 8' CROSSARM
HIGH NEUTRAL - 6° TO 30°
2/0 ACSR MAX WIRE

REVISIONS

R	DATE	ENGR	OPS
1	3/02	REDRAWN	IN CAD
2	3/20/08	CM	AH
3	6/13/17	CM	DK
4	2/11/25	CM	GM

PAGE: 1 of 2

A5A,A5ATREE

CAD FILE: A5A

APP: ELM
DATE: 1/31/80

SECTION 310

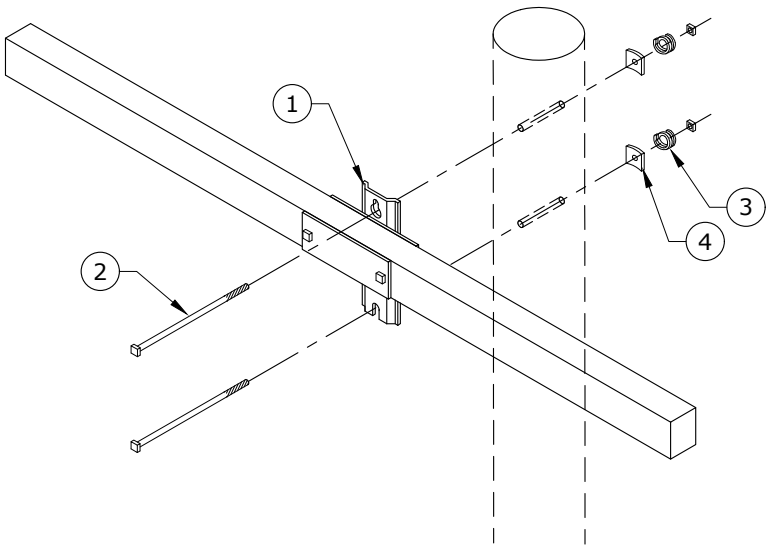

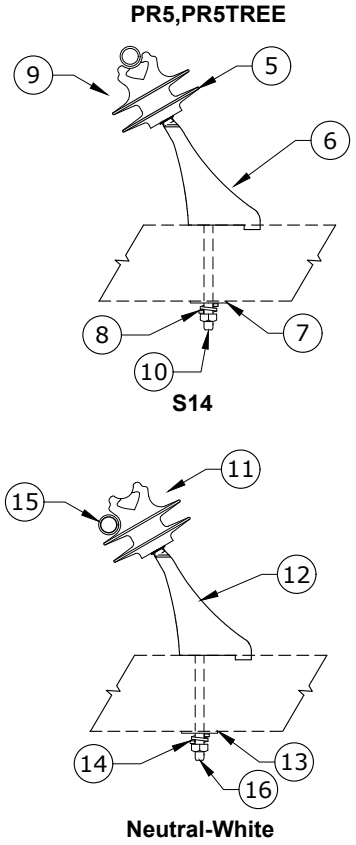

Rev. 4 - Changed to single fiberglass crossarm with angled pin.

ITEM NO	DESCRIPTION	A5ATREE CR23A ✡ QTY	A5ATREE CR23A ✡ S/N	A5A CR23A ✡ QTY	A5A CR23A ✡ S/N
1	Crossarm, Distribution, Fiberglass, 8' Long x 3-5/8" Wide x 4-5/8" High	1	3030	1	3030
2	Bolt, Machine, 5/8" x 14", Galv, 12,400 lb Ultimate Tensile	2	156	2	156
3	Washer, Lock, Spring, Double Coil, Galv, 5/8"	2	2217	2	2217
4	Washer, Curved, Square, Cast, 3" x 3" x 3/8" Thick x 13/16" Hole	2	1392	2	1392
ITEM NO	DESCRIPTION	PR5TREE QTY	PR5TREE S/N	PR5 QTY	PR5 S/N
5	Insulator, Pin, C Neck, Polymer	1	1968	1	1968
6	Pin, Angle, Crossarm	1	2658	1	2658
7	Washer, Square Flat, 5/8", 2 1/4" x 2 1/4"	1	1412	1	1412
8	Washer, Lock, Spring, Double Coil, Galv, 5/8"	1	2217	1	2217
9	Wire, Tie, AL Annealed #4 SD	11	3012	10	1421
10	Bolt, Machine, 5/8" x 7", Galv, 12,400 lb Ultimate Tensile	1	2606	1	2606
ITEM NO	DESCRIPTION	S14 QTY	S14 S/N	S14 QTY	S14 S/N
11	Insulator, Pin, C Neck, White, Polymer	1	2656	1	2656
12	Pin, Angle, Crossarm	1	2658	1	2658
13	Washer, Square, Flat, 5/8", 2 1/4" x 2 1/4"	1	1412	1	1412
14	Washer, Lock, Spring, Double Coil, Galv, 5/8"	1	2217	1	2217
15	Wire, Tie, AL Annealed #4 SD	10	1421	10	1421
16	Bolt, Machine, 5/8" x 7", Galv, 12,400 lb Ultimate Tensile	1	2606	1	2606
ITEM NO	DESCRIPTION	Additional Materials QTY	Additional Materials S/N	Additional Materials QTY	Additional Materials S/N
17	Clips, Nylon, 1/4"	3	2996	3	2996
18	Screw, Self-tapping, #10 x 1", Hex Washer Head, TEK, Stainless Steel	3	2997	3	2997

Clark Public Utilities

CONSTRUCTION STANDARDS

1Ø 8' SINGLE CROSSARM
HIGH NEUTRAL - 6° TO 30°
2/0 ACSR MAX WIRE

REVISIONS

R	DATE	ENGR	OPS
1	3/02	REDRAWN	IN CAD
2	3/20/08	CM	AH
3	6/13/17	CM	DK
4	2/11/25	CM	GM

PAGE: 2 of 2

A5A,A5ATREE

CAD FILE: A5A

APP: ELM
DATE: 1/31/80

SECTION 310

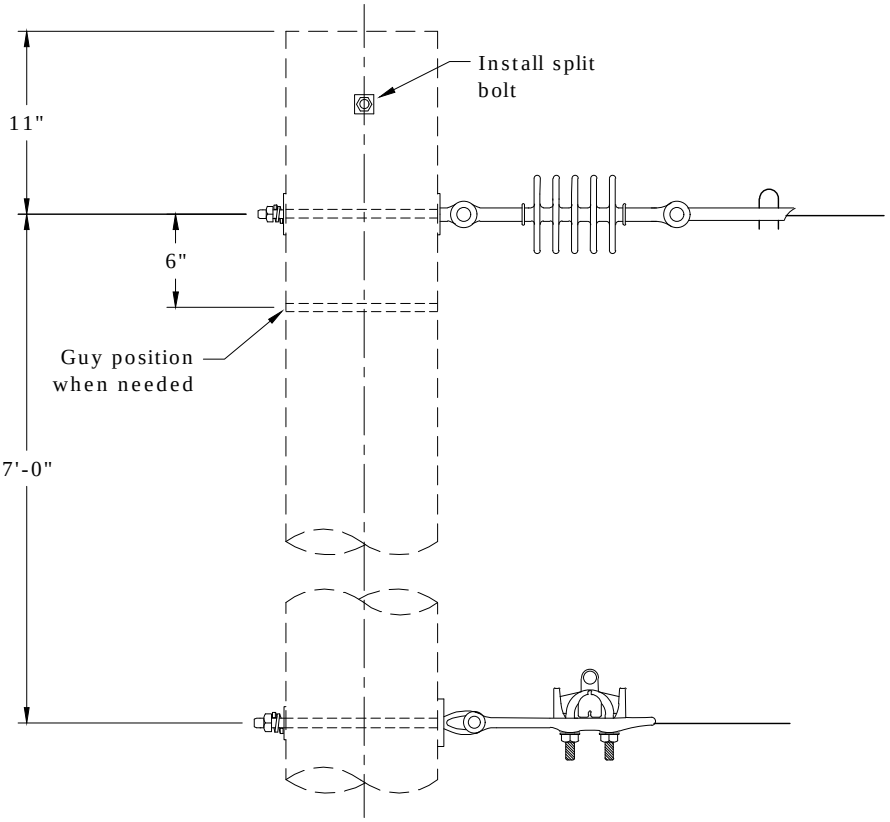

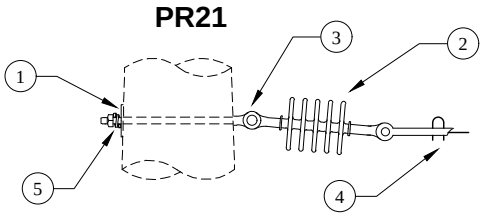

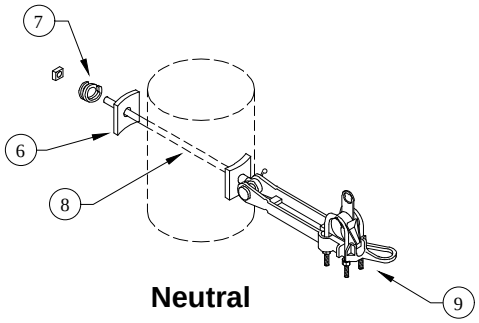

Avian Safe

Rev. 4 - Added avian note.

ITEM NO.	DESCRIPTION	A41 PR21 QTY.	S/N
1	Washer, Curved, Square, Cast, 3" x 3" x 3/8" Thick x 13/16" Hole	1	1392
2	Insulator, Susp. 15 kV Clevis-Tongue, Polymer ✡	1	1967
3	Bolt, Eye, 5/8" x 14", Galv., 12,400 lbs Ultimate Tensile ✡	1	108
4	Clamp, Strain, Distribution, #2 to 397.5 MCM	1	302
5	Washer, Lock, Spring, Double Coil, Galv., 5/8" ✡	1	2217

ITEM NO.	DESCRIPTION	ADDITIONAL MATERIALS QTY.	S/N
6	Washer, Curved, Square, Cast, 3" x 3" x 3/8" Thick x 13/16" Hole	2	1392
7	Washer, Lock, Spring, Double Coil, Galv., 5/8" ✡	1	2217
8	Bolt, Eye, 5/8" x 14", Galv., 12,400 lbs Ultimate Tensile ✡	1	108
9	Clamp, Strain #2	1	300

Clark Public Utilities

CONSTRUCTION STANDARDS

1Ø VERTICAL DEADEND
2/0 ACSR MAX WIRE

REVISIONS

R	DATE	ENGR	OPS
1	2/11/81	GGW	
2	3/02	REDRAWN	IN CAD
3	3/20/08	CM	AH
4	6/13/17	CM	DK

PAGE: 1 of 1

A41

CAD FILE: A41

APP: ELM

DATE: 1/31/80

SECTION 310

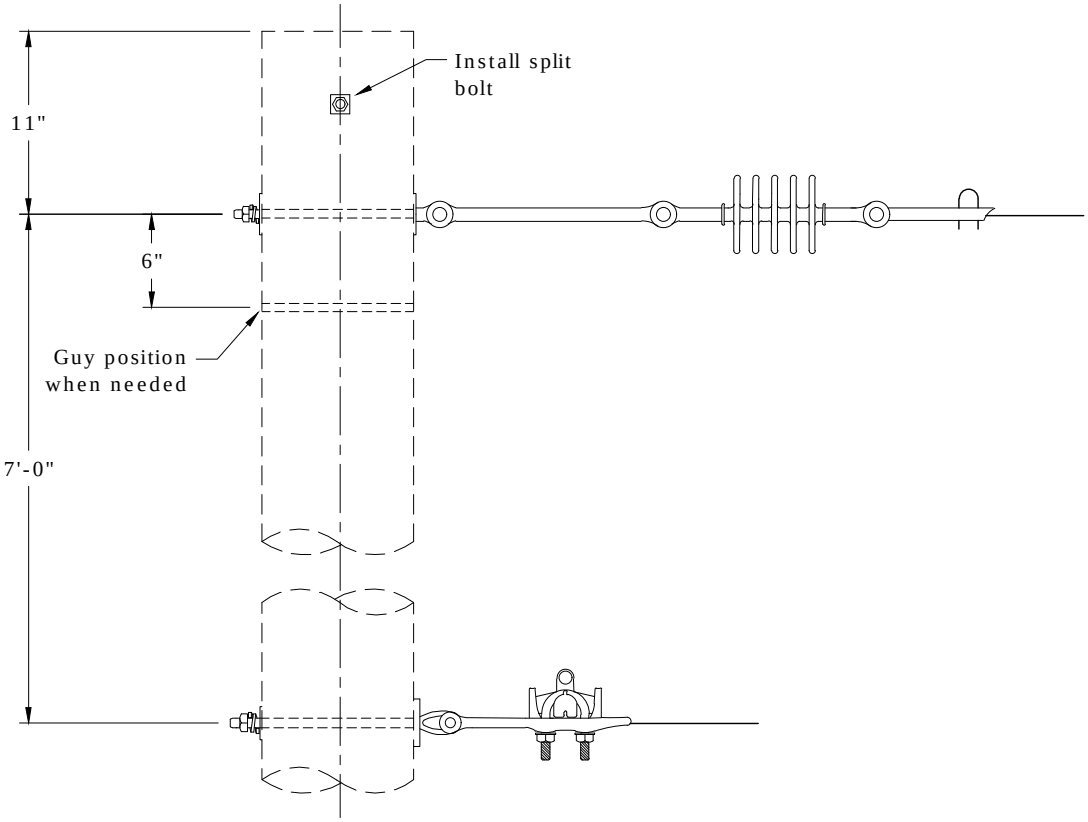

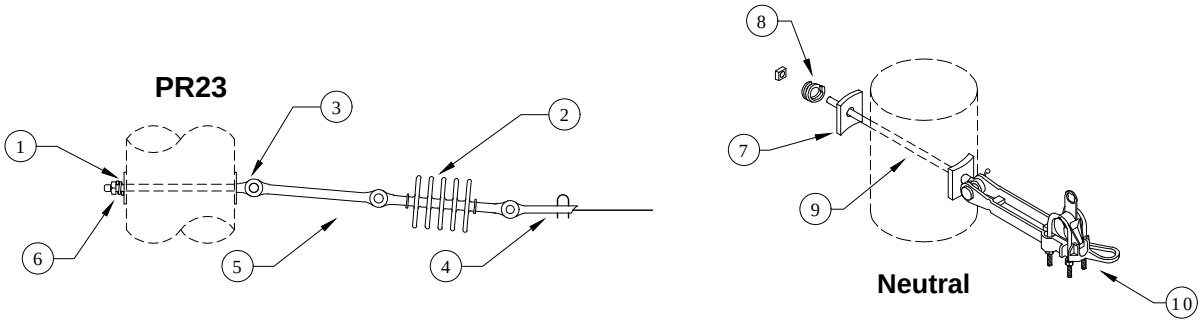

Avian Safe

Rev. 1 - Added avian note.

ITEM NO.	DESCRIPTION	A42 PR23 QTY.	S/N
1	Washer, Curved, Square, Cast, 3" x 3" x 3/8" Thick x 13/16" Hole	1	1392
2	Insulator, Susp. 15 kV Clevis-Tongue, Polymer ✡	1	1967
3	Bolt, Eye, 5/8" x 14" Galv., 12,400 lbs Ultimate Tensile	1	108
4	Clamp, Strain, Distribution, #2 to 397.5 MCM	1	302
5	Insulator, Guy Strain, Fiberglass, 20"	1	2909 ✡
6	Washer, Lock, Spring, Double Coil, Galv., 5/8"	1	2217

ITEM NO.	DESCRIPTION	ADDITIONAL MATERIALS QTY.	S/N
7	Washer, Curved, Square, Cast, 3" x 3" x 3/8" Thick x 13/16" Hole	2	1392
8	Washer, Lock, Spring, Double Coil, Galv., 5/8"	1	2217
9	Bolt, Eye, 5/8" x 14" Galv., 12,400 lbs Ultimate Tensile	1	108
10	Clamp, Strain #2	1	300

Clark Public Utilities

CONSTRUCTION STANDARDS

1Ø VERTICAL DEADEND
W/ EXTENSION LINK
2/0 ACSR MAX WIRE

REVISIONS

R	DATE	ENGR	OPS
1	6/13/17	CM	DK

PAGE: 1 of 1 | A42 | CAD FILE: A42

APP: CM/AH
DATE: 3/20/08

SECTION 310

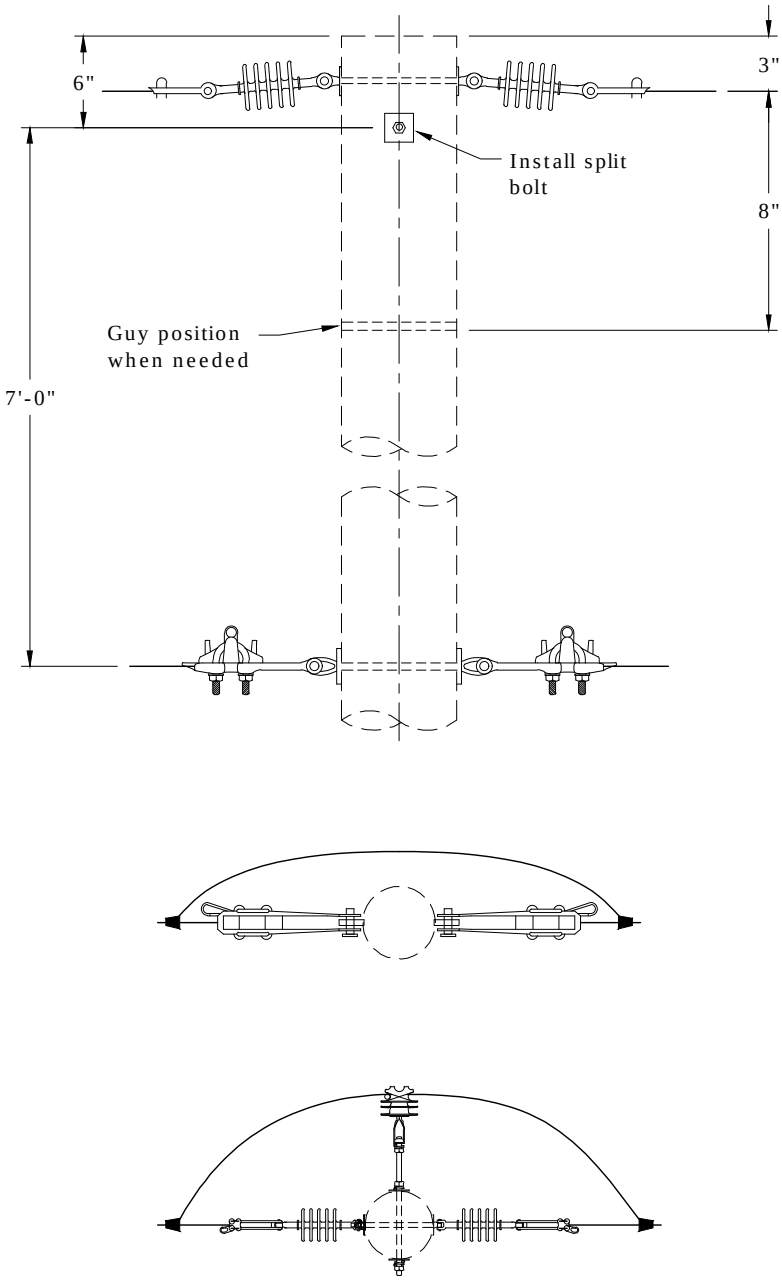

Avian Safe

Rev. 3 - Eliminated porcelain pin insulator and added avian note.

Clark Public Utilities

CONSTRUCTION STANDARDS

1Ø VERTICAL DOUBLE DEADEND
2/0 ACSR MAX WIRE

REVISIONS

R	DATE	ENGR	OPS
2	3/02	REDRAWN	IN CAD
3	3/20/08	CM	AH
4	7/29/10	KJP	
5	6/13/17	CM	DK

PAGE:		CAD FILE:	APP: ELM	SECTION
1 of 2	A47,A47TREE	A47	DATE: 1/31/80	310

PR20,PR20TREE

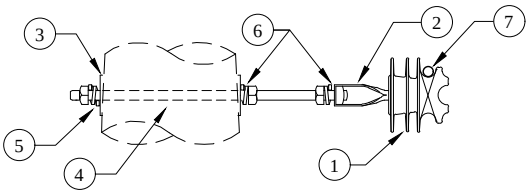

PR21

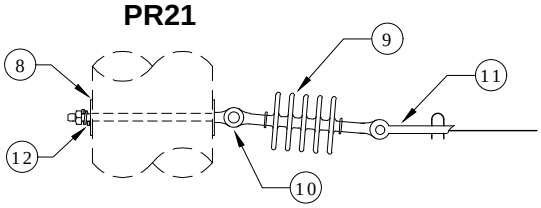

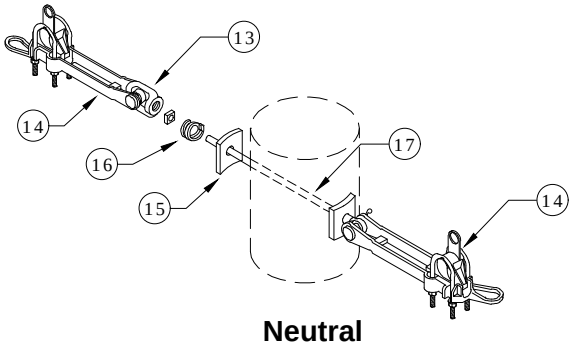

Neutral

Rev. 5 - Eliminated porcelain pin insulator and added avian note.

ITEM NO.	DESCRIPTION	A47TREE PR20TREE QTY.	A47TREE PR20TREE S/N	A47 PR20 QTY.	A47 PR20 S/N
1	Insulator Pin, C Neck, Polymer	1	1968	1	1968 ✲
2	Pin, Adapter	1	959	1	959
3	Washer, Curved, Square, Cast, 3" x 3" x 3/8" Thick x 13/16" Hole	2	1392	2	1392
4	Bolt, Double Arm, 5/8" x 16", Galv., 12,400 lbs Ultimate Tensile	1	81	1	81
5	Washer, Lock, Spring, Double Coil, Galv., 5/8"	1	2217	1	2217
6	Washer, Lock, Spring, Single Coil, Galv., 5/8"	2	1403	2	1403
7	Wire, Tie, AL Annealed #4 SD	11✲	3012	10	1421

ITEM NO.	DESCRIPTION	PR21 (2) QTY.	PR21 (2) S/N	PR21 (2) QTY.	PR21 (2) S/N
8	Washer, Curved, Square, Cast, 5/8", 3" x 3" x 3/8" Thick x 13/16" Hole	2	1392	2	1392
9	Insulator, Susp. 15 kV Clevis-Tongue, Polymer	2	1967	2	1967
10	Bolt, Eye, 5/8" x 14", Galv., 12,400 lbs Ultimate Tensile	2	108	2	108
11	Clamp, Strain, Distribution, #2 to 397.5 MCM	2	302	2	302
12	Washer, Lock, Spring, Double Coil, Galv., 5/8"	2	2217	2	2217

ITEM NO.	DESCRIPTION	ADDITIONAL MATERIAL QTY.	ADDITIONAL MATERIAL S/N	ADDITIONAL MATERIAL QTY.	ADDITIONAL MATERIAL S/N
13	Nut, Eye Oval 5/8"	1	913	1	913
14	Clamp, Strain #2	2	300	2	300
15	Washer, Curved, 3" x 3" x 3/8" Thick x 13/16" Hole	2	1392	2	1392
16	Washer, Lock, Spring, Double Coil, Galv., 5/8"	1	2217	1	2217
17	Bolt, Eye, 5/8" X 14", Galv., 12,400 lbs Ultimate Tensile	1	108	1	108

Clark Public Utilities

CONSTRUCTION STANDARDS

1Ø VERTICAL DOUBLE DEADEND
2/0 ACSR MAX WIRE

REVISIONS

R	DATE	ENGR	OPS
2	3/02	REDRAWN	IN CAD
3	3/20/08	CM	AH
4	7/29/10	KJP	
5	6/13/17	CM	DK

PAGE: 2 of 2

A47,A47TREE

CAD FILE: A47

APP: ELM
DATE: 1/31/80

SECTION 310

FRONT VIEW

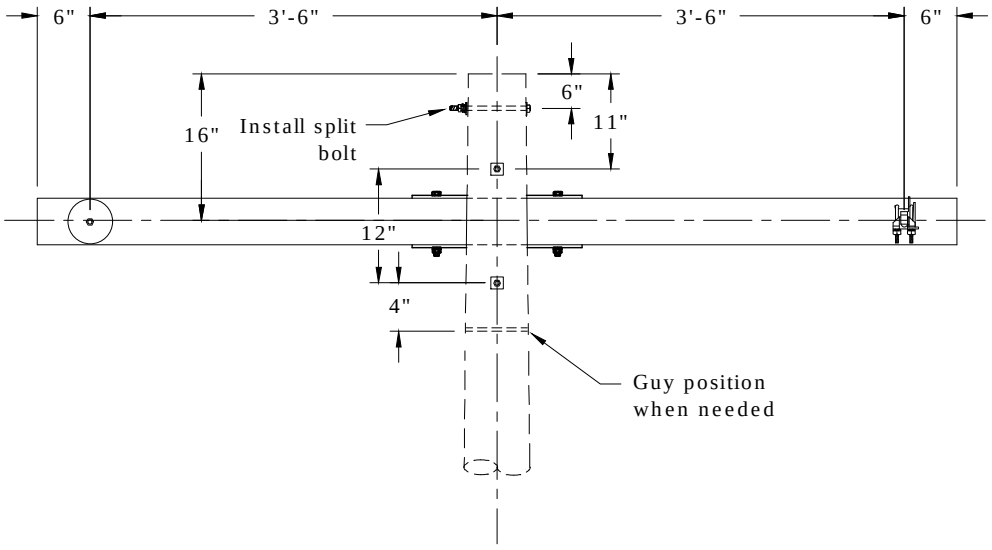

TOP VIEW

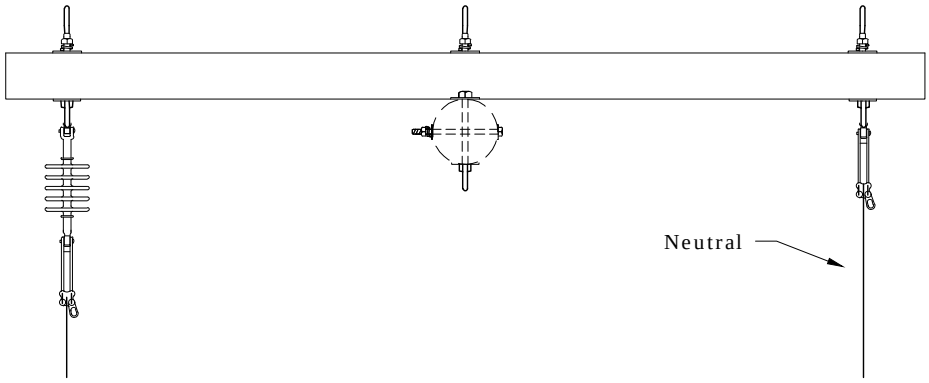

Avian Safe

Note: This framing is for clearance limited situations only.

Rev. 1 - Added avian note.

Clark Public Utilities

CONSTRUCTION STANDARDS

8' PRE-ASSEMBLED DEADEND
HIGH NEUTRAL
2/0 ACSR MAX WIRE

REVISIONS			
R	DATE	ENGR	OPS
1	6/13/17	CM	DK

PAGE:		CAD FILE:	APP: CM/AH	SECTION
1 of 2	A48A	A48A	DATE: 3/20/08	310

CR26A

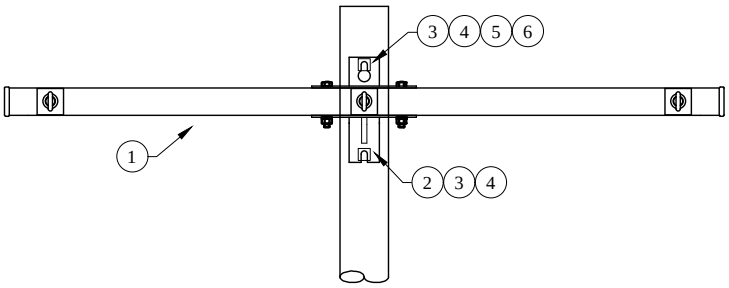

Back View

PR24

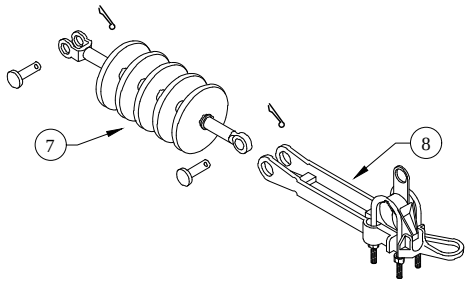

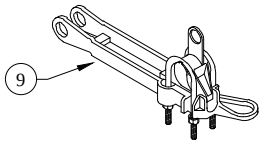

Neutral

Rev. 1 - Added avian note.

ITEM NO.	DESCRIPTION	A48A CR26A QTY.	S/N
1	Arm, Deadend Assembly, 8', 3-Position, 397 Max	1	2508
2	Bolt, Machine, 3/4" x 14" Galv., 18,350 lbs Ultimate Tensile	1	174
3	Washer, Lock, Spring, Double Coil, Galv., 3/4"	2	2218
4	Washer, Curved, Square, Cast, 3" x 3" x 3/8" Thick x 13/16" Hole	2	1392
5	Nut, Eye Oval 3/4"	1	914
6	Bolt, Machine, 3/4" x 16" Galv., 18,350 lbs Ultimate Tensile	1	175
ITEM NO.	**DESCRIPTION**	**PR24 QTY.**	**S/N**
7	Insulator, Susp. 15 kV Clevis-Tongue, Polymer ✲	1	1967
8	Clamp, Strain, Distribution, #2 to 397.5 MCM	1	302
ITEM NO.	**DESCRIPTION**	**ADDITIONAL MATERIAL QTY.**	**S/N**
9	Clamp, Strain, #2	1	300

Clark Public Utilities

CONSTRUCTION STANDARDS

8' PRE-ASSEMBLED DEADEND
HIGH NEUTRAL
2/0 ACSR MAX WIRE

REVISIONS

R	DATE	ENGR	OPS
1	6/13/17	CM	DK

PAGE: 2 of 2

A48A

CAD FILE: A48A

APP: CM/AH
DATE: 3/20/08

SECTION 310

FRONT VIEW

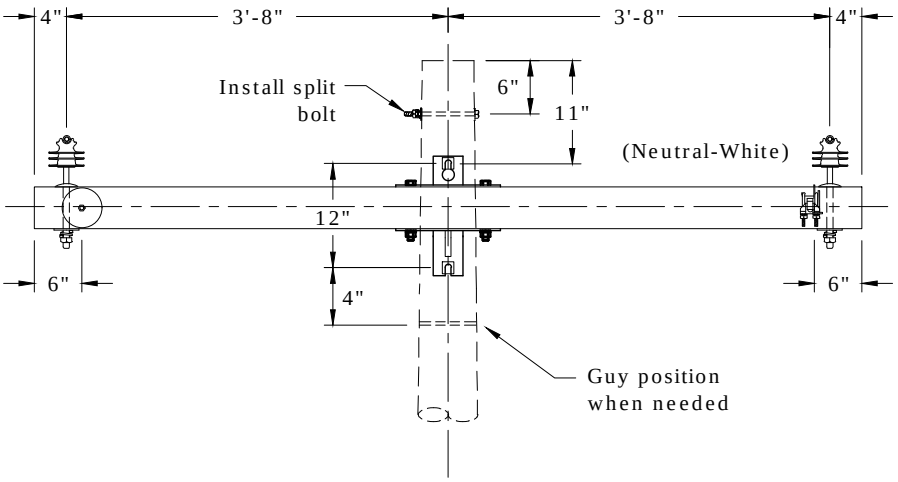

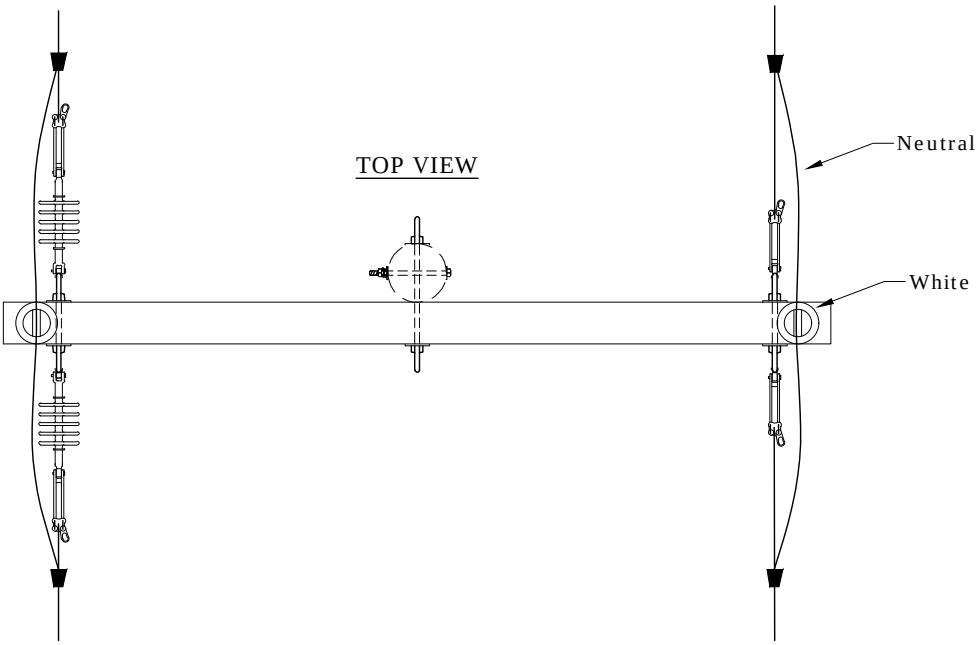

Avian Safe

Rev. 2 - Eliminated porcelain pin insulators and added avian note.

Clark Public Utilities

CONSTRUCTION STANDARDS

8' PRE-ASSEMBLED DOUBLE DEADEND
HIGH NEUTRAL
2/0 ACSR MAX WIRE

REVISIONS

R	DATE	ENGR	OPS
1	7/29/10	KJP	
2	6/13/17	CM	DK

PAGE: 1 of 2

A49A,A49ATREE

CAD FILE: A49A

APP: CM/AH

DATE: 3/20/08

SECTION 310

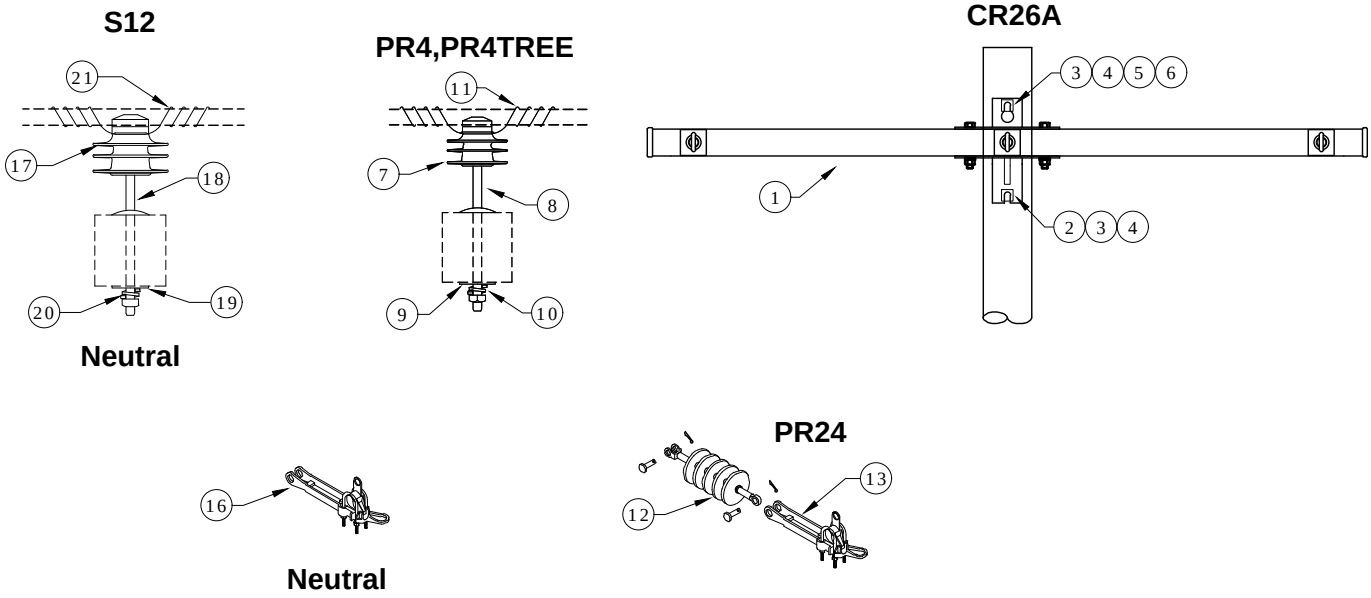

Rev. 2 - Eliminated porcelain pin insulators and added avian note.

ITEM NO.	DESCRIPTION	A49ATREE CR26A QTY.	A49ATREE CR26A S/N	A49A CR26A QTY.	A49A CR26A S/N
1	Arm, Deadend Assembly, 8', 3-Position, 397 Max	1	2508	1	2508
2	Bolt, Machine, 3/4" x 14", Galv., 18,350 lbs Ultimate Tensile	1	174	1	174
3	Washer, Lock, Spring, Double Coil, Galv., 3/4"	2	2218	2	2218
4	Washer, Curved, Square, Cast, 3" x 3" x 3/8" Thick x 13/16" Hole	2	1392	2	1392
5	Nut, Eye Oval 3/4"	1	914	1	914
6	Bolt, Machine, 3/4" x 16" Galv., 18,350 lbs Ultimate Tensile	1	175	1	175
ITEM NO.	DESCRIPTION	PR4TREE QTY.	PR4TREE S/N	PR4 QTY.	PR4 S/N
7	Insulator, Pin, C Neck Polymer	1	1968	1	1968 ✡
8	Pin, Crossarm	1	961	1	961
9	Washer, Square Flat 5/8", 2 1/4" x 2 1/4"	1	1412	1	1412
10	Washer, Lock, Spring, Double Coil, Galv., 5/8"	1	2217	1	2217
11	Wire, Tie, AL Annealed #4 SD	11✡	3012	10	1421
ITEM NO.	DESCRIPTION	PR24 (2) QTY.	PR24 (2) S/N	PR24 (2) QTY.	PR24 (2) S/N
12	Insulator, Susp. 15 kV Clevis-Tongue, Polymer ✡	2	1967	2	1967
13	Clamp, Strain, Distribution, #2 to 397.5 MCM	2	302	2	302
ITEM NO.	DESCRIPTION	ADDITIONAL MATERIAL QTY.	ADDITIONAL MATERIAL S/N	ADDITIONAL MATERIAL QTY.	ADDITIONAL MATERIAL S/N
14	Connector, Tap, Wedge 2/0 to 2/0	2	2559	2	2559
15	Connector, Tap, Wedge #2 to #2	2	2688 ✡	2	2688 ✡
16	Clamp, Strain #2	2	300	2	300
ITEM NO.	DESCRIPTION	S12 QTY.	S12 S/N	S12 QTY.	S12 S/N
17	Insulator, Pin, C Neck, White Polymer	1	2656	1	2656
18	Pin, Crossarm	1	961	1	961
19	Washer, Square Flat, 5/8", 2 1/4" x 2 1/4"	1	1412	1	1412
20	Washer, Lock, Spring, Double Coil, Galv., 5/8"	1	2217	1	2217
21	Wire, Tie, AL Annealed #4 SD	10	1421	10	1421

Clark Public Utilities

CONSTRUCTION STANDARDS

8' PRE-ASSEMBLED DOUBLE DEADEND
HIGH NEUTRAL
2/0 ACSR MAX WIRE

REVISIONS

R	DATE	ENGR	OPS
1	7/29/10	KJP	
2	6/13/17	CM	DK

PAGE: 2 of 2

A49A,A49ATREE

CAD FILE: A49A

APP: CM/AH
DATE: 3/20/08

SECTION 310

320
2Ø Distribution
Up to 2/0 ACSR

2/11/2025

C	B1A,-TREE	2Ø Single 8' Crossarm - 0° to 5°
C	B2A,-TREE	2Ø Double 8' Crossarm - 6° to 30°
C	B4A,-TREE	2Ø Single 8' Crossarm - High Neutral, 0° to 5°
C	B5A,-TREE	2Ø Double 8' Crossarm - High Neutral, 6° to 30°
~	B13,-TREE	2Ø Vertical w/ Pole Top - 0° to 5°
~	B14,-TREE	2Ø Vertical w/ Double Pole Top - 6° to 30°
~	B48A	8' Pre-assembled Deadend - High Neutral
~	B49A,-TREE	8' Pre-assembled Double Deadend - High Neutral
~	B50A	8' Pre-assembled Deadend
~	B51A,-TREE	8' Pre-assembled Double Deadend

N New Standard
R Redrawn Standard
C Changed Standard
~ No Change

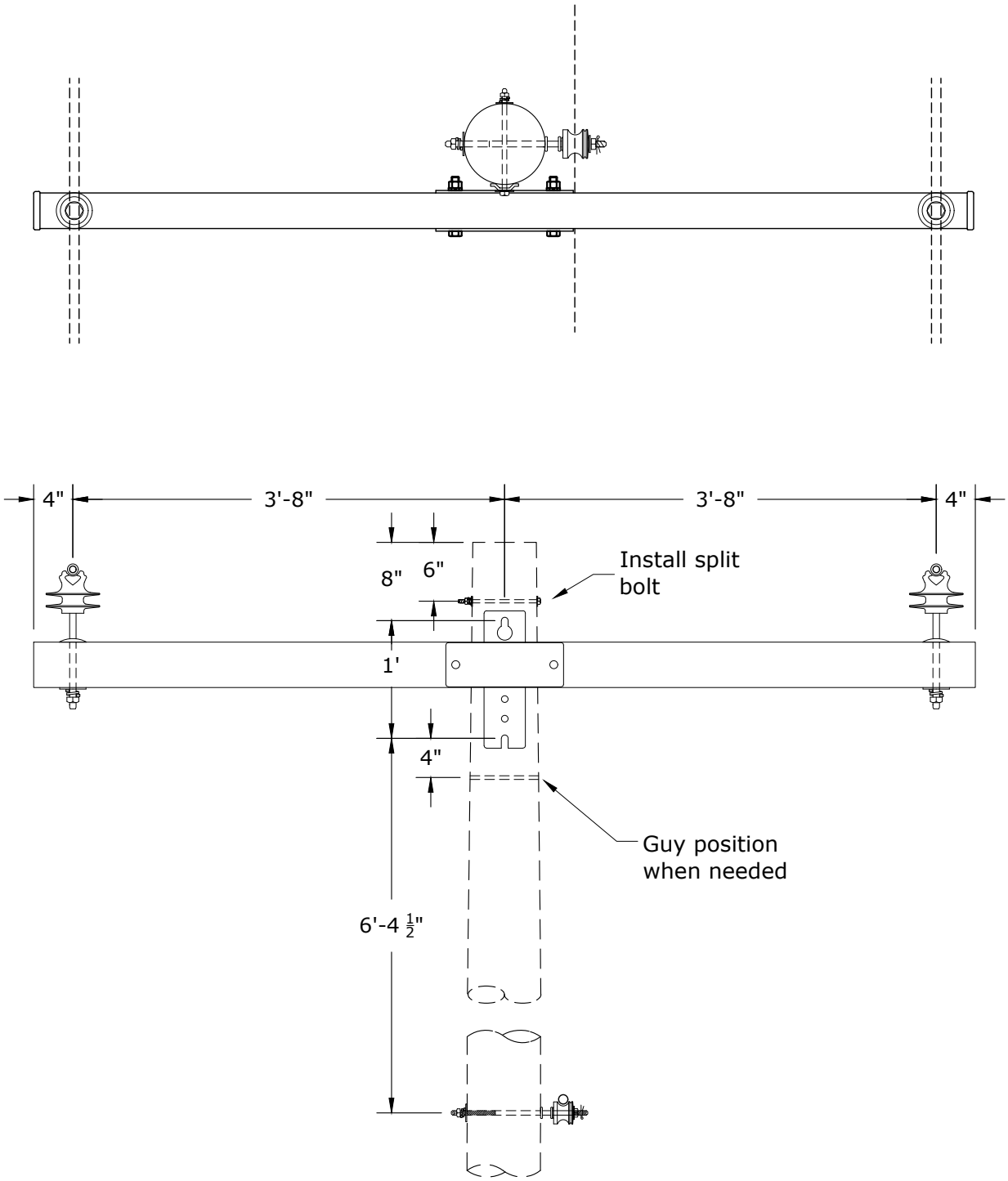

Avian Safe

Note: Maximum line angle calculated for 2,000 lb MWT and 250-ft ruling span.

Rev. 4 - Changed to fiberglass crossarm.

Clark Public Utilities

CONSTRUCTION STANDARDS

2Ø SINGLE 8' CROSSARM
0° TO 5°
2/0 ACSR MAX WIRE

REVISIONS

R	DATE	ENGR	OPS
1	3/02	REDRAWN	IN CAD
2	3/5/08	LB	AH
3	11/15/17	CM	DK
4	2/11/25	CM	GM

PAGE: 1 of 2

B1A,B1ATREE

CAD FILE: B1A

APP: ELM
DATE: 1/31/80

SECTION 320

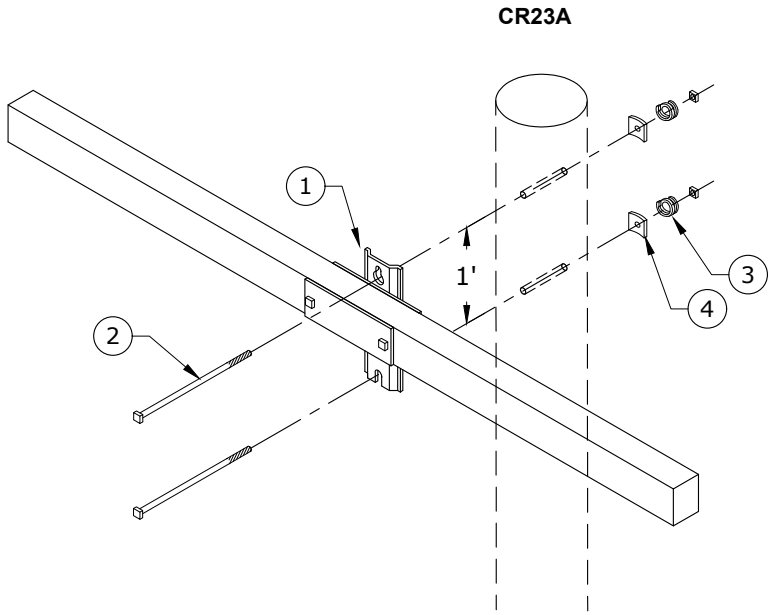

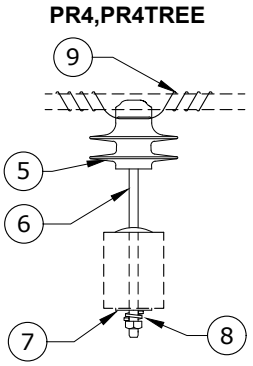

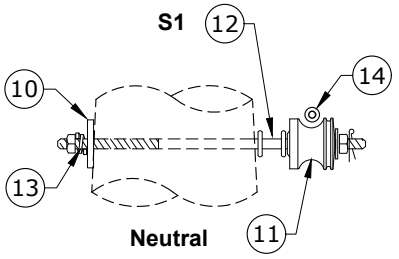

Rev. 4 - Changed to fiberglass crossarm.

ITEM NO	DESCRIPTION	B1ATREE CR23A ✲ QTY	B1ATREE CR23A ✲ S/N	B1A CR23A ✲ QTY	B1A CR23A ✲ S/N
1	Crossarm, Distribution, Fiberglass, 8' Long x 3-5/8" Wide x 4-5/8" High	1	3030	1	3030
2	Bolt, Machine, 5/8" x 14", Galv, 12,400 lb Ultimate Tensile	2	156	2	156
3	Washer, Lock, Spring, Double Coil, Galv, 5/8"	2	2217	2	2217
4	Washer, Curved, Square, Cast, 3" x 3" x 3/8" Thick x 13/16" Hole	2	1392	2	1392
ITEM NO	DESCRIPTION	PR4TREE (2) QTY	PR4TREE (2) S/N	PR4 (2) QTY	PR4 (2) S/N
5	Insulator, Pin, C Neck, Polymer	2	1968	2	1968
6	Pin, Crossarm	2	961	2	961
7	Washer, Square Flat 5/8", 2 1/4" x 2 1/4"	2	1412	2	1412
8	Washer, Lock, Spring Double Coil, Galv, 5/8"	2	2217	2	2217
9	Wire, Tie, AL Annealed #4 SD	22	3012	20	1421
ITEM NO	DESCRIPTION	S1 QTY	S1 S/N	S1 QTY	S1 S/N
10	Washer, Curved, Square, Cast, 3" x 3" x 3/8" Thick x 13/16" Hole	1	1392	1	1392
11	Insulator, Spool Clevis, Small, ANSI 53-2 Class	1	773	1	773
12	Bolt, Double Upset 5/8" x 14", Galv, 12,400 lb Ultimate	1	1580	1	1580
13	Washer, Lock, Spring, Double Coil, Galv, 5/8"	1	2217	1	2217
14	Wire, Tie, AL Annealed #4 SD	10	1421	10	1421

Clark Public Utilities

CONSTRUCTION STANDARDS

2Ø SINGLE 8' CROSSARM
0° TO 5°
2/0 ACSR MAX WIRE

REVISIONS

R	DATE	ENGR	OPS
1	3/02	REDRAWN	IN CAD
2	3/5/08	LB	AH
3	11/15/17	CM	DK
4	2/11/25	CM	GM

PAGE: 2 of 2

B1A,B1ATREE

CAD FILE: B1A

APP: ELM
DATE: 1/31/80

SECTION 320

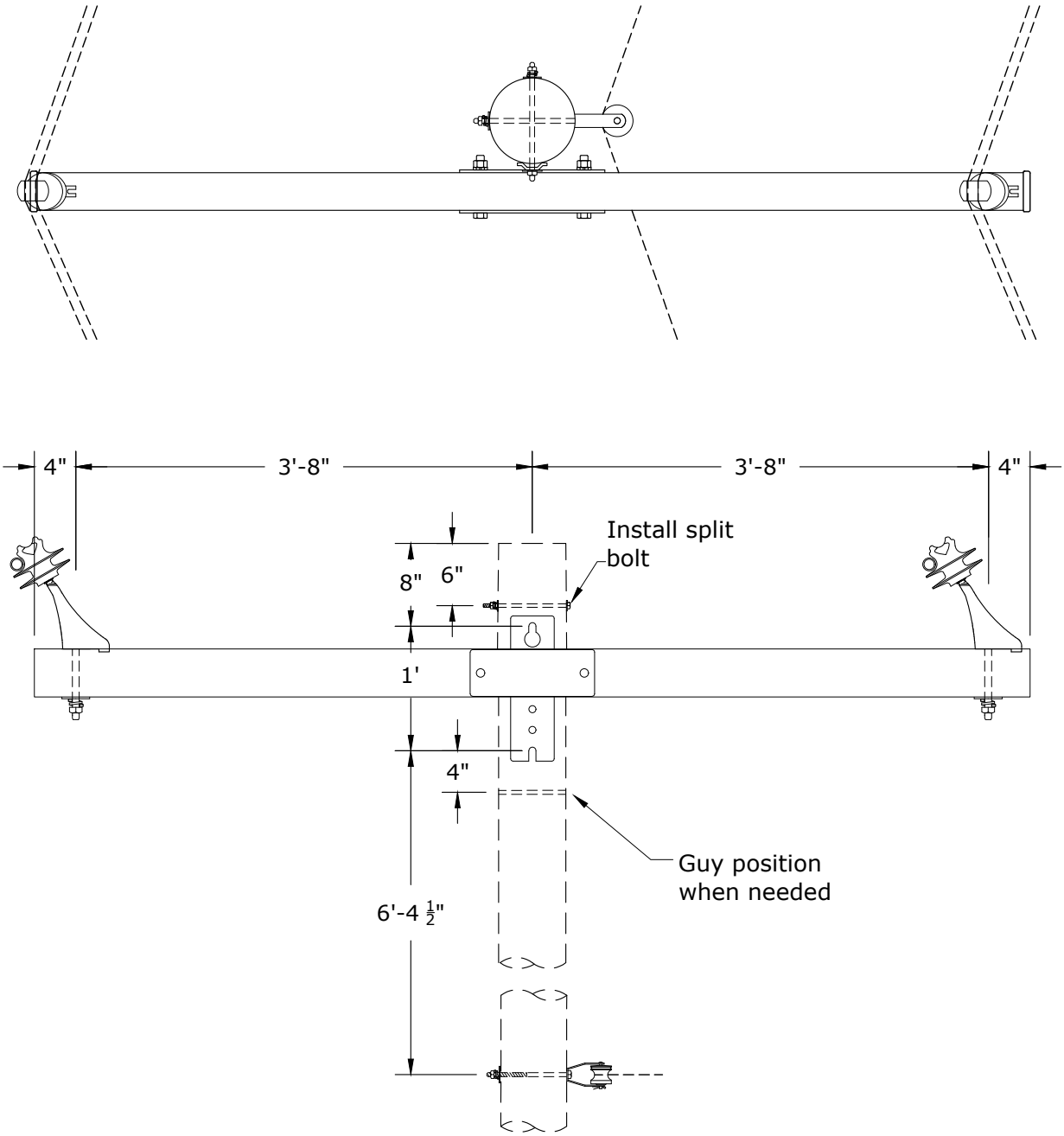

Avian Safe

Note: Maximum line angle calculated for 2,000 lb MWT and 250-ft ruling span.

Rev. 4 - Changed to single fiberglass crossarm with angled pin.

Clark Public Utilities

CONSTRUCTION STANDARDS

2Ø SINGLE 8' CROSSARM
6° TO 30°
2/0 ACSR MAX WIRE

REVISIONS

R	DATE	ENGR	OPS
1	3/02	REDRAWN	IN CAD
2	3/5/08	LB	AH
3	11/15/17	CM	DK
4	2/11/25	CM	GM

PAGE: 1 of 2

B2A,B2ATREE

CAD FILE: B2A

APP: ELM
DATE: 1/31/80

SECTION 320

PR5,PR5TREE

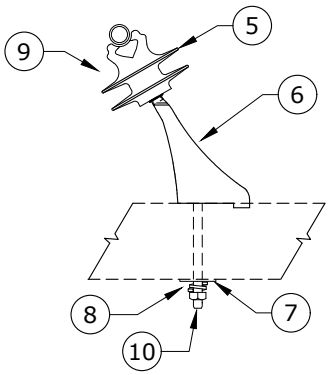

CR23A

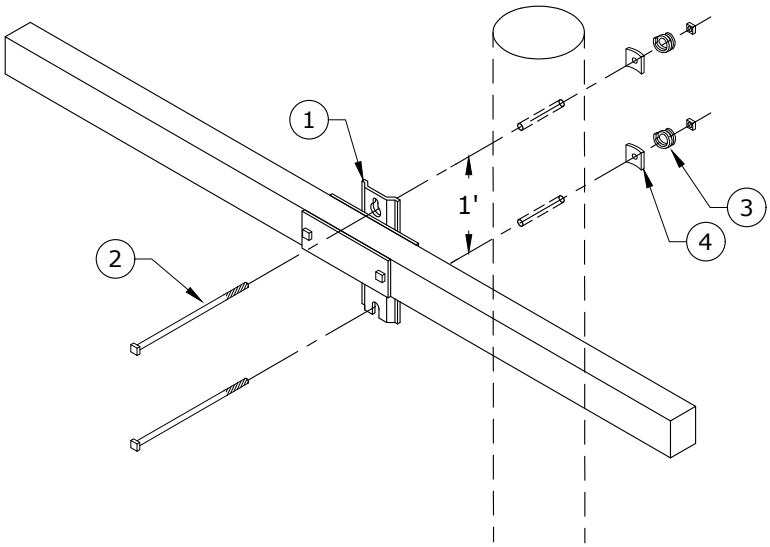

S2

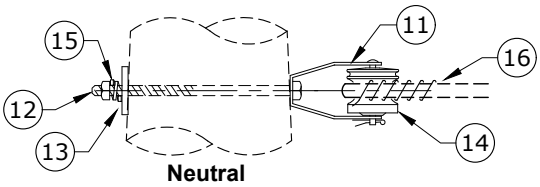

Rev. 4 - Changed to single fiberglass crossarm with angled pin.

ITEM NO	DESCRIPTION	B2ATREE CR23A ✲ QTY	B2ATREE CR23A ✲ S/N	B2A CR23A ✲ QTY	B2A CR23A ✲ S/N
1	Crossarm, Distribution, Fiberglass, 8' Long x 3-5/8" Wide x 4-5/8" High	1	3030	1	3030
2	Bolt, Machine, 5/8" x 14", Galv, 12,400 lb Ultimate Tensile	2	156	2	156
3	Washer, Lock, Spring, Double Coil, Galv, 5/8"	2	2217	2	2217
4	Washer, Curved, Square, Cast, 3" x 3" x 3/8" Thick x 13/16" Hole	2	1392	2	1392

ITEM NO	DESCRIPTION	PR5TREE(2) QTY	PR5TREE(2) S/N	PR5 (2) QTY	PR5 (2) S/N
5	Insulator, Pin, C Neck, Polymer	2	1968	2	1968
6	Pin, Angle, Crossarm	2	2658	2	2658
7	Washer, Square Flat, 5/8", 2 1/4" x 2 1/4"	2	1412	2	1412
8	Washer, Lock, Spring, Double Coil, Galv, 5/8"	2	2217	2	2217
9	Wire, Tie, AL Annealed #4 SD	22	3012	20	1421
10	Bolt, Machine, 5/8" x 7", Galv, 12,400 lb Ultimate Tensile	2	2606	2	2606

ITEM NO	DESCRIPTION	S2 QTY	S2 S/N	S2 QTY	S2 S/N
11	Clevis, D.E. Insulator 1340	1	335	1	335
12	Bolt, Machine 5/8" x 14", Galv, 12,400 lb Ultimate Tensile	1	156	1	156
13	Washer, Curved, Square, Cast, 3" x 3" x 3/8" Thick x 13/16" Hole	1	1392	1	1392
14	Insulator, Spool Clevis, Small, ANSI 53-2 Class	1	773	1	773
15	Washer, Lock, Spring, Double Coil, Galv, 5/8"	1	2217	1	2217
16	Wire, Tie, AL Annealed #4 SD	10	1421	10	1421

Clark Public Utilities

CONSTRUCTION STANDARDS

2Ø SINGLE 8' CROSSARM
6° TO 30°
2/0 ACSR MAX WIRE

REVISIONS

R	DATE	ENGR	OPS
1	3/02	REDRAWN	IN CAD
2	3/5/08	LB	AH
3	11/15/17	CM	DK
4	2/11/25	CM	GM

PAGE: 2 of 2

B2A,B2ATREE

CAD FILE: B2A

APP: ELM
DATE: 1/31/80

SECTION 320

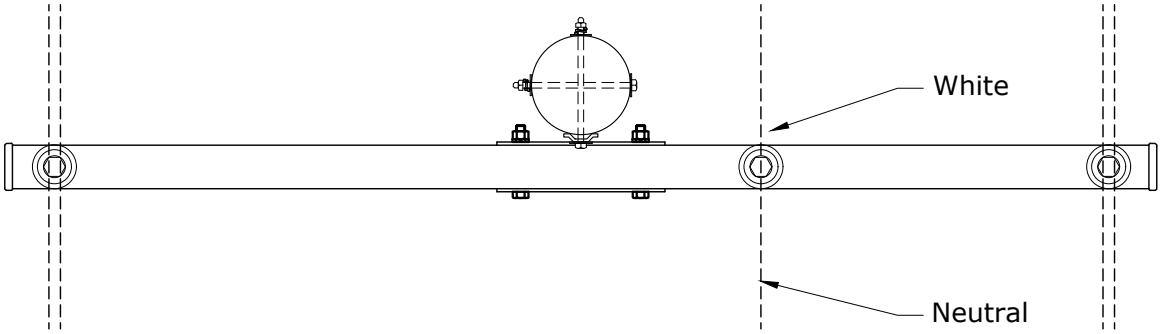

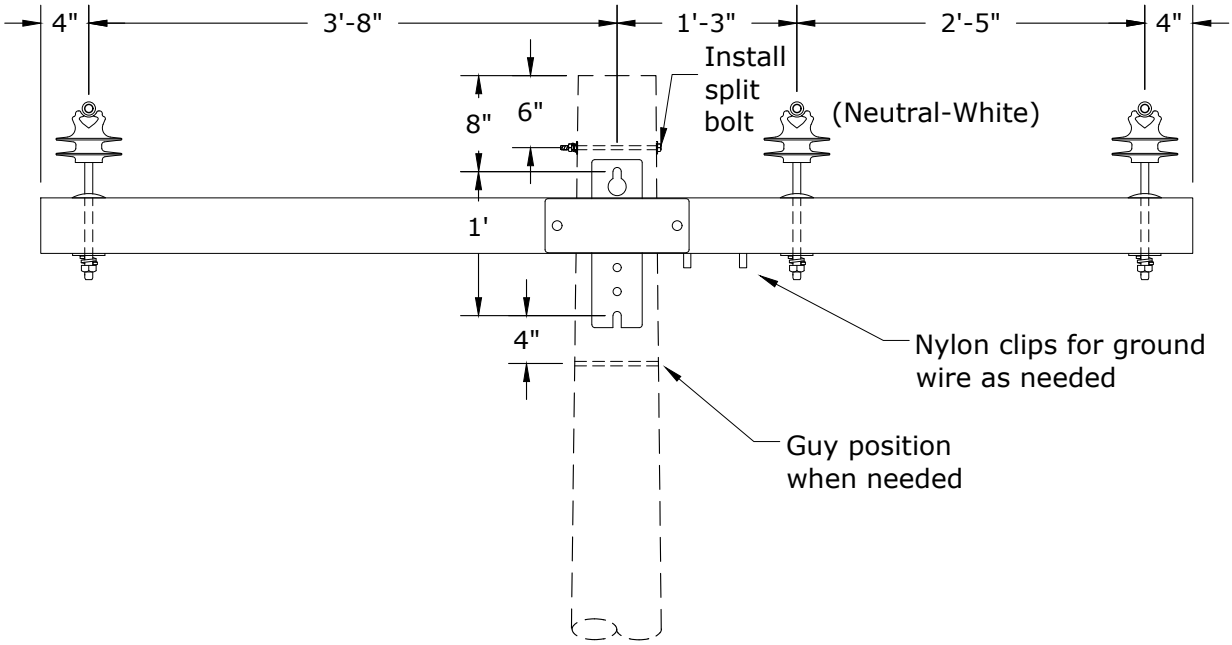

B4ATREE - Avian Safe

Notes:

1. Maximum line angle calculated for 2,000 lb MWT and 250-ft ruling span.
2. This framing is for clearance limited situations only.
3. See Std AC - Avian Covers - Section 400 if needed. Covers only required on neutral.

Rev. 4 - Changed to fiberglass crossarm.

Clark Public Utilities

CONSTRUCTION STANDARDS

2Ø SINGLE 8' CROSSARM
HIGH NEUTRAL, 0° TO 5°
2/0 ACSR MAX WIRE

REVISIONS

R	DATE	ENGR	OPS
1	3/02	REDRAWN	IN CAD
2	3/5/08	LB	AH
3	11/15/17	CM	DK
4	2/11/25	CM	GM

PAGE: 1 of 2

B4A,B4ATREE

CAD FILE: B4A

APP: ELM
DATE: 1/31/80

SECTION 320

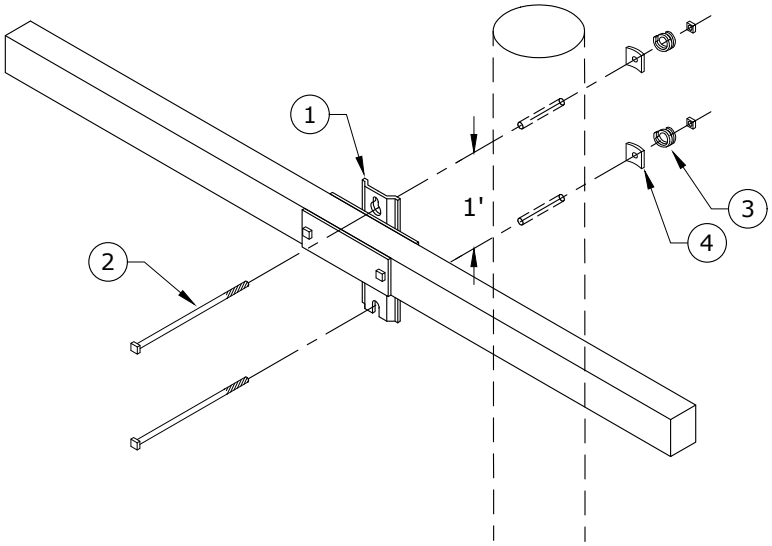

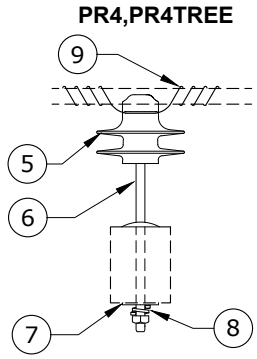

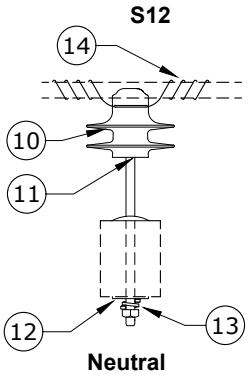

Rev. 4 - Changed to fiberglass crossarm.

ITEM NO	DESCRIPTION	B4ATREE		B4A	
		CR23A ✲		CR23A ✲	
		QTY	S/N	QTY	S/N
1	Crossarm, Distribution, Fiberglass, 8' Long x 3-5/8" Wide x 4-5/8" High	1	3030	1	3030
2	Bolt, Machine, 5/8" x 14", Galv, 12,400 lb Ultimate Tensile	2	156	2	156
3	Washer, Lock, Spring, Double Coil, Galv, 5/8"	2	2217	2	2217
4	Washer, Curved, Square, Cast, 3" x 3" x 3/8" Thick x 13/16" Hole	2	1392	2	1392
ITEM NO	DESCRIPTION	PR4TREE (2)		PR4 (2)	
		QTY	S/N	QTY	S/N
5	Insulator, Pin, C Neck, Polymer	2	1968	2	1968
6	Pin, Crossarm	2	961	2	961
7	Washer, Square, Flat 5/8", 2 1/4" x 2 1/4"	2	1412	2	1412
8	Washer, Lock, Spring, Double Coil, Galv, 5/8"	2	2217	2	2217
9	Wire, Tie, AL Annealed #4 SD	22	3012	20	1421
ITEM NO	DESCRIPTION	S12		S12	
		QTY	S/N	QTY	S/N
10	Insulator, Pin, C Neck, White Polymer	1	2656	1	2656 ✲
11	Pin, Crossarm	1	961	1	961
12	Washer, Square, Flat, 5/8", 2 1/4" x 2 1/4"	1	1412	1	1412
13	Washer, Lock, Spring, Double Coil, Galv, 5/8"	1	2217	1	2217
14	Wire, Tie, AL Annealed #4 SD	10	1421	10	1421
ITEM NO	DESCRIPTION	Additional Materials		Additional Materials	
		QTY	S/N	QTY	S/N
15	Clips, Nylon, 1/4"	2	2996	2	2996
16	Screw, Self-tapping, #10 x 1", Hex Washer Head, TEK, Stainless Steel	2	2997	2	2997

Clark Public Utilities

CONSTRUCTION STANDARDS

2Ø SINGLE 8' CROSSARM
HIGH NEUTRAL, 0° TO 5°
2/0 ACSR MAX WIRE

REVISIONS

R	DATE	ENGR	OPS
1	3/02	REDRAWN	IN CAD
2	3/5/08	LB	AH
3	11/15/17	CM	DK
4	2/11/25	CM	GM

PAGE: 2 of 2

B4A,B4ATREE

CAD FILE: B4A

APP: ELM
DATE: 1/31/80

SECTION 320

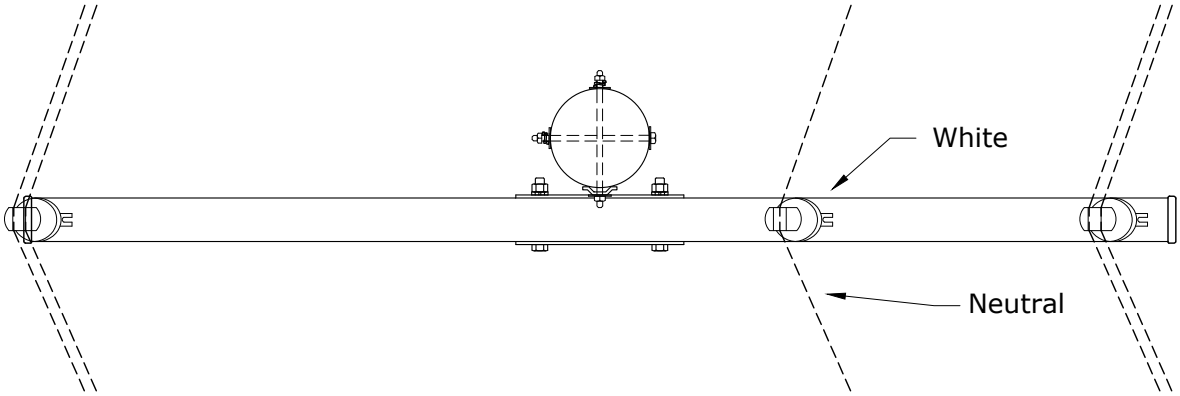

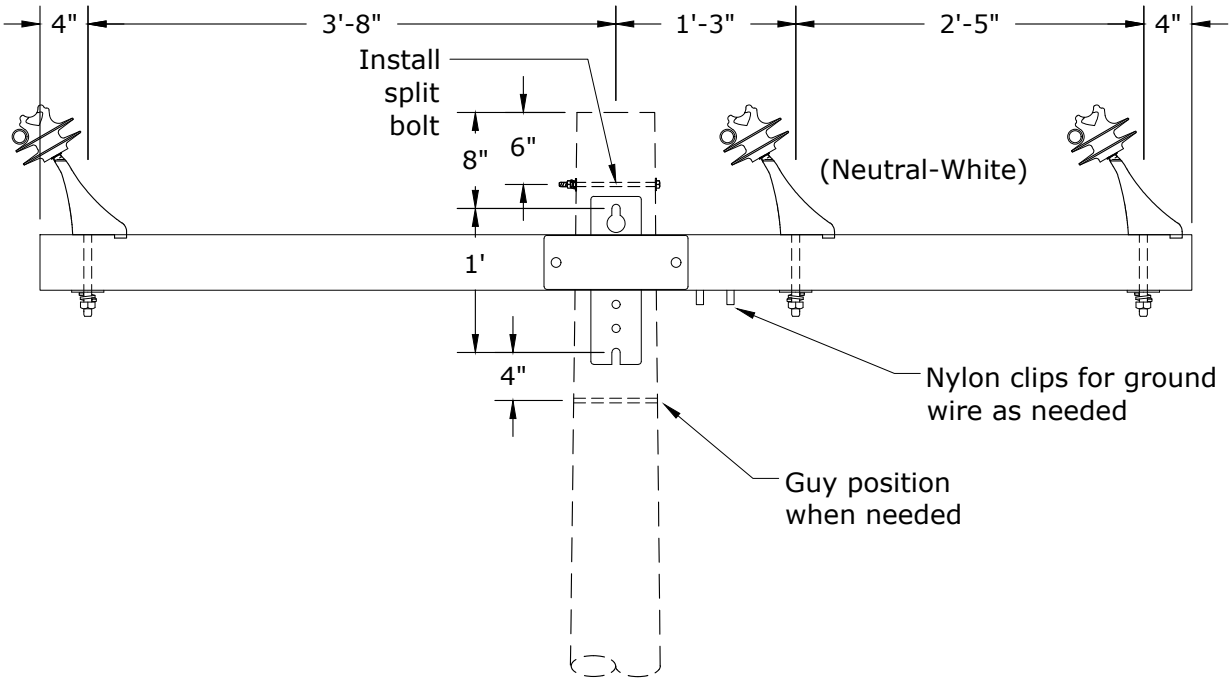

B5ATREE - Avian Safe

Notes:

1. Maximum line angle calculated for 2,000 lb MWT and 250-ft ruling span.
2. This framing is for clearance limited situations only.
3. See Std AC - Avian Covers - Section 400 if needed. Covers only required on neutral.

Rev. 4 - Changed to single fiberglass crossarm with angle pin.

Clark Public Utilities

CONSTRUCTION STANDARDS

2Ø SINGLE 8' CROSSARM
HIGH NEUTRAL, 6° TO 30°
2/0 ACSR MAX WIRE

REVISIONS

R	DATE	ENGR	OPS
1	3/02	REDRAWN	IN CAD
2	3/5/08	LB	AH
3	11/15/17	CM	DK
4	2/11/25	CM	GM

PAGE:		CAD FILE:	APP: ELM	SECTION
1 of 2	B5A,B5ATREE	B5A	DATE: 1/31/80	320

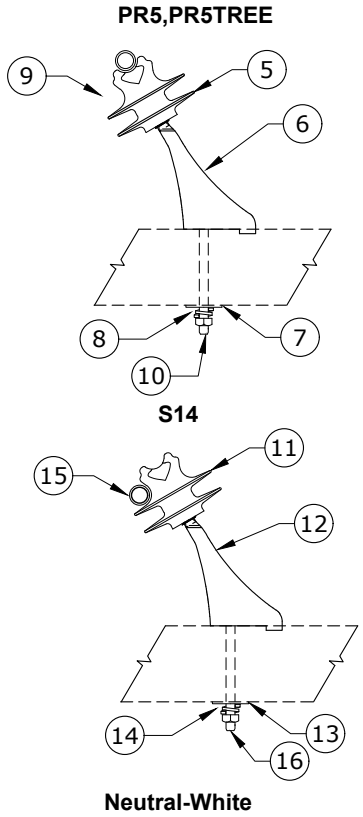

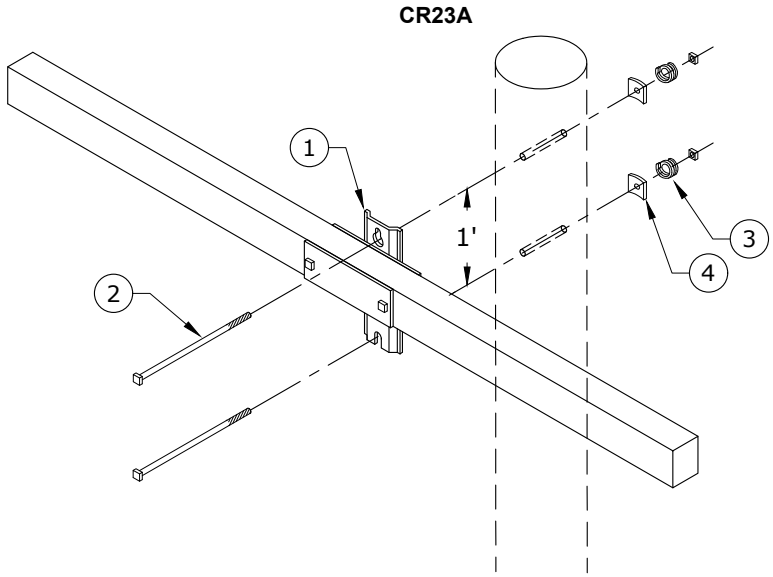

Rev. 4 - Changed to single fiberglass crossarm with angle pin.

ITEM NO	DESCRIPTION	B5ATREE CR23A ✲ QTY	B5ATREE CR23A ✲ S/N	B5A CR23A ✲ QTY	B5A CR23A ✲ S/N
1	Crossarm, Distribution, Fiberglass, 8' Long x 3-5/8" Wide x 4-5/8" High	1	3030	1	3030
2	Bolt, Machine, 5/8" x 14", Galv, 12,400 lb Ultimate Tensile	2	156	2	156
3	Washer, Lock, Spring, Double Coil, Galv, 5/8"	2	2217	2	2217
4	Washer, Curved, Square, Cast, 3" x 3" x 3/8" Thick x 13/16" Hole	2	1392	2	1392
ITEM NO	**DESCRIPTION**	**PR5TREE(2) QTY**	**PR5TREE(2) S/N**	**PR5 (2) QTY**	**PR5 (2) S/N**
5	Insulator, Pin, C Neck, Polymer	2	1968	2	1968
6	Pin, Angle, Crossarm	2	2658	2	2658
7	Washer, Square Flat, 5/8", 2 1/4" x 2 1/4"	2	1412	2	1412
8	Washer, Lock, Spring, Double Coil, Galv, 5/8"	2	2217	2	2217
9	Wire, Tie, AL Annealed #4 SD	22	3012	20	1421
10	Bolt, Machine, 5/8" x 7", Galv, 12,400 lb Ultimate Tensile	2	2606	2	2606
ITEM NO	**DESCRIPTION**	**S14 QTY**	**S14 S/N**	**S14 QTY**	**S14 S/N**
11	Insulator, Pin, C Neck, White, Polymer	1	2656	1	2656
12	Pin, Angle, Crossarm	1	2658	1	2658
13	Washer, Square, Flat, 5/8", 2 1/4" x 2 1/4"	1	1412	1	1412
14	Washer, Lock, Spring, Double Coil, Galv, 5/8"	1	2217	1	2217
15	Wire, Tie, AL Annealed #4 SD	10	1421	10	1421
16	Bolt, Machine, 5/8" x 7", Galv, 12,400 lb Ultimate Tensile	1	2606	1	2606
ITEM NO	**DESCRIPTION**	**Additional Materials QTY**	**Additional Materials S/N**	**Additional Materials QTY**	**Additional Materials S/N**
17	Clips, Nylon, 1/4"	2	2996	2	2996
18	Screw, Self-tapping, #10 x 1", Hex Washer Head, TEK, Stainless Steel	2	2997	2	2997

Clark Public Utilities

CONSTRUCTION STANDARDS

2Ø SINGLE 8' CROSSARM
HIGH NEUTRAL, 6° TO 30°
2/0 ACSR MAX WIRE

REVISIONS

R	DATE	ENGR	OPS
1	3/02	REDRAWN	IN CAD
2	3/5/08	LB	AH
3	11/15/17	CM	DK
4	2/11/25	CM	GM

PAGE: 2 of 2

B5A,B5ATREE

CAD FILE: B5A

APP: ELM
DATE: 1/31/80

SECTION 320

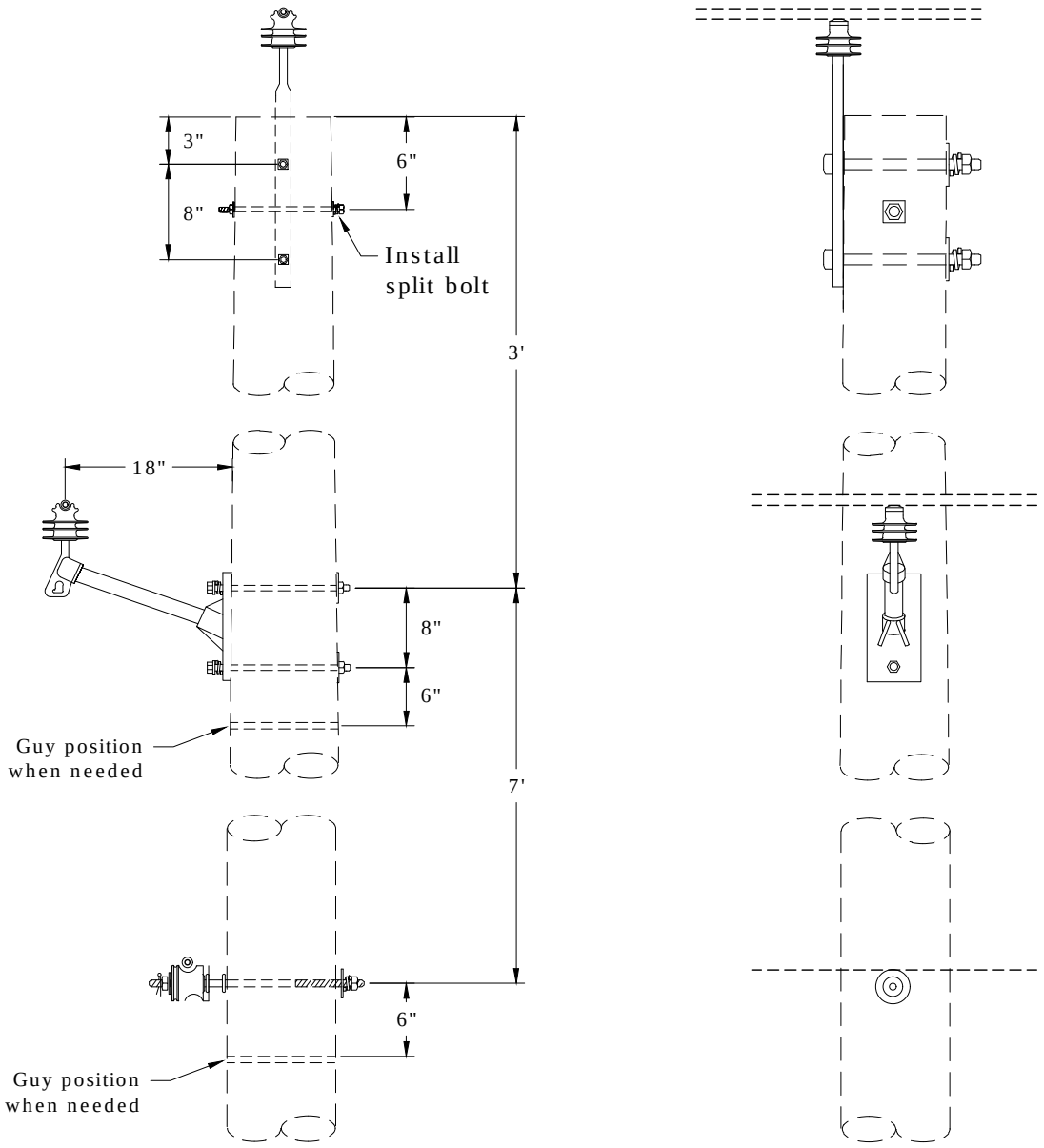

B13TREE - Avian Safe

Notes:

1. Maximum line angle calculated for 2,000 lbs. MWT and 250-ft ruling span.
2. See Std AC - Avian Covers - Section 400 if needed. Covers only required on one phase.

Rev. 1 - Eliminated porcelain pin insulators and added avian notes.

Clark Public Utilities

CONSTRUCTION STANDARDS

2Ø VERTICAL W/ POLE TOP
0° TO 5°
2/0 ACSR MAX WIRE

REVISIONS

R	DATE	ENGR	OPS
1	11/15/17	CM	DK

PAGE: 1 of 2

B13,B13TREE

CAD FILE: B13

APP: LB/AH
DATE: 3/5/08

SECTION 320

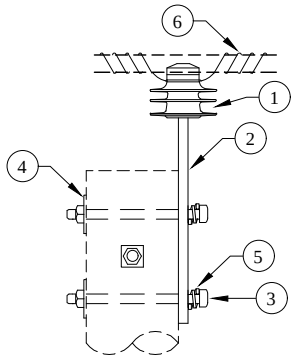

PR1, PR1TREE

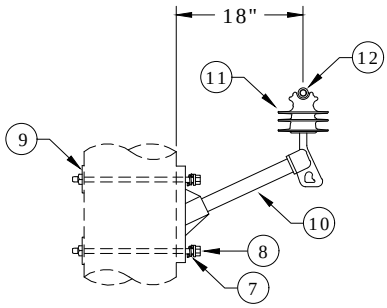

PR60, PR60TREE

S1

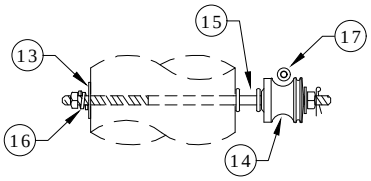

Neutral

Rev. 1 - Eliminated porcelain pin insulators and added avian notes.

ITEM NO.	DESCRIPTION	B13TREE PR1TREE QTY.	B13TREE PR1TREE S/N	B13 PR1 QTY.	B13 PR1 S/N
1	Insulator, Pin, C Neck, Polymer	1	1968	1	1968 ✡
2	Pin, Pole Top	1	962	1	962
3	Bolt, Machine 5/8" x 12", Galv., 12,400 lbs Ultimate Tensile ✡	2	155	2	155
4	Washer, Curved, Square, Cast, 3" x 3" x 3/8" Thick x 13/16" Hole	2	1392	2	1392
5	Washer, Lock, Spring, Double Coil, Galv., 5/8"	2	2217	2	2217
6	Wire, Tie, AL Annealed #4 SD	11✡	3012	10	1421

ITEM NO.	DESCRIPTION	PR60TREE QTY.	PR60TREE S/N	PR60 QTY.	PR60 S/N
7	Washer, Lock, Spring, Double Coil, Galv., 5/8"	2	2217	2	2217
8	Bolt, Machine 5/8" x 16", Galv., 12,400 lbs Ultimate Tensile ✡	2	157	2	157
9	Washer, Curved, Square, Cast, 3" x 3" x 3/8" Thick x 13/16" Hole	2	1392	2	1392
10	Arm, Epoxy 18" 2500 lbs	1	2504	1	2504
11	Insulator, Pin, C Neck, Polymer	1	1968	1	1968 ✡
12	Wire, Tie, AL Annealed #4 SD	11✡	3012	10	1421

ITEM NO.	DESCRIPTION	S1 QTY.	S1 S/N	S1 QTY.	S1 S/N
13	Washer, Curved, Square, Cast, 3" x 3" x 3/8" Thick x 13/16" Hole	1	1392	1	1392
14	Insulator, Spool, Clevis, Small, ANSI 53-2 Class	1	773	1	773
15	Bolt, Double Upset 5/8" x 14", Galv., 12,400 lbs Ultimate Tensile ✡	1	1580	1	1580
16	Washer, Lock, Spring, Double Coil, Galv., 5/8" ✡	1	2217	1	2217
17	Wire, Tie, AL Annealed #4 SD	10	1421	10	1421

Clark Public Utilities

CONSTRUCTION STANDARDS

2Ø VERTICAL W/ POLE TOP
0° TO 5°
2/0 ACSR MAX WIRE

REVISIONS

R	DATE	ENGR	OPS
1	11/15/17	CM	DK

PAGE: 2 of 2

B13,B13TREE

CAD FILE: B13

APP: LB/AH
DATE: 3/5/08

SECTION 320

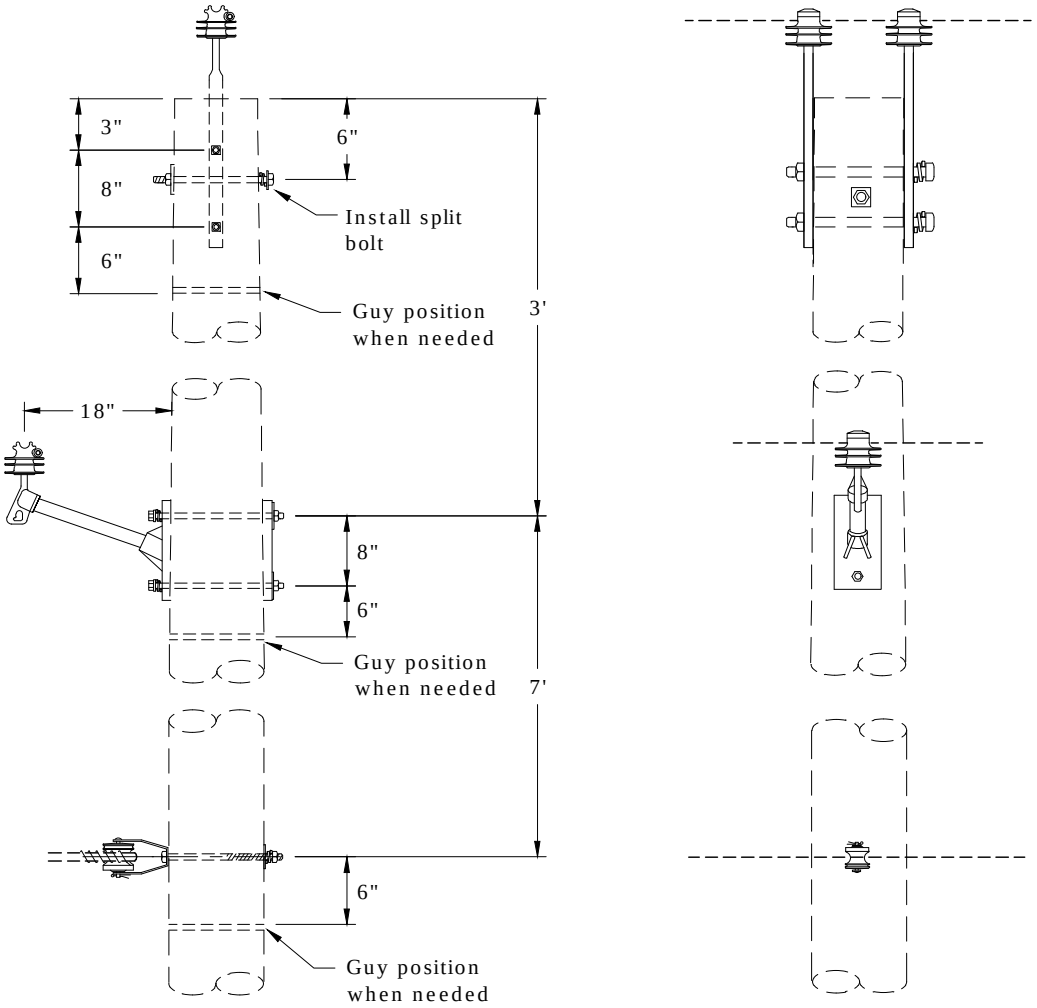

B14TREE - Avian Safe

Notes:

1. Maximum line angle calculated for 2,000 lbs. MWT and 250-ft ruling span.
2. See Std AC - Avian Covers - Section 400 if needed. Covers only required on one phase.

Rev. 1 - Eliminated porcelain pin insulators and added avian notes.

Clark Public Utilities

CONSTRUCTION STANDARDS

2Ø VERTICAL W/ DOUBLE POLE TOP
6° TO 30°
2/0 ACSR MAX WIRE

REVISIONS			
R	DATE	ENGR	OPS
1	11/15/17	CM	DK

PAGE:		CAD FILE:	APP: LB/AH	SECTION
1 of 2	B14,B14TREE	B14	DATE: 3/5/08	320

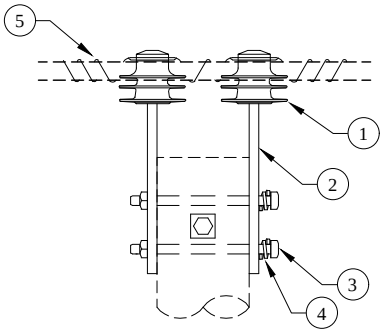

PR2, PR2TREE

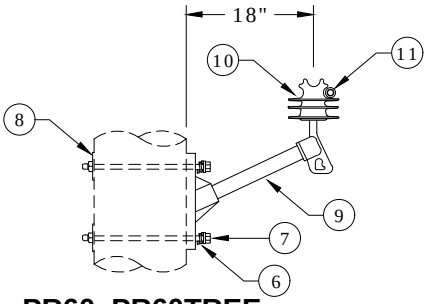

PR60, PR60TREE

Neutral

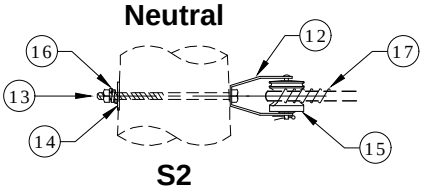

S2

Rev. 1 - Eliminated porcelain pin insulators and added avian notes.

ITEM NO.	DESCRIPTION	B14TREE PR2TREE QTY.	B14TREE PR2TREE S/N	B14 PR2 QTY.	B14 PR2 S/N
1	Insulator, Pin, C Neck, Polymer	2	1968	2	1968 ✲
2	Pin, Pole Top	2	962	2	962
3	Bolt, Machine 5/8" x 14", Galv., 12,400 lbs Ultimate Tensile ✲	2	156	2	156
4	Washer, Lock, Spring, Double Coil, Galv., 5/8"	2	2217	2	2217
5	Wire, Tie, AL Annealed #4 SD	22 ✲	3012	20	1421

ITEM NO.	DESCRIPTION	PR60TREE QTY.	PR60TREE S/N	PR60 QTY.	PR60 S/N
6	Washer, Lock, Spring, Double Coil, Galv., 5/8"	2	2217	2	2217
7	Bolt, Machine 5/8" x 16", Galv., 12,400 lbs Ultimate Tensile ✲	2	157	2	157
8	Washer, Curved, Square, Cast, 3" x 3" x 3/8" Thick x 13/16" Hole	2	1392	2	1392
9	Arm, Epoxy 18" 2500 lbs	1	2504	1	2504
10	Insulator, Pin, C Neck, Polymer	1	1968	1	1968 ✲
11	Wire, Tie, AL Annealed #4 SD	11✲	3012	10	1421

ITEM NO.	DESCRIPTION	S2 QTY.	S2 S/N	S2 QTY.	S2 S/N
12	Clevis, D.E. Insulator 1340	1	335	1	335
13	Bolt, Machine 5/8" x 14", Galv., 12,400 lbs Ultimate Tensile ✲	1	156	1	156
14	Washer, Curved, Square, Cast, 3" x 3" x 3/8" Thick x 13/16" Hole	1	1392	1	1392
15	Insulator, Spool, Clevis, Small, ANSI 53-2 Class	1	773	1	773
16	Washer, Lock, Spring, Double Coil, Galv., 5/8" ✲	1	2217	1	2217
17	Wire, Tie, AL Annealed #4 SD	10	1421	10	1421

Clark Public Utilities

CONSTRUCTION STANDARDS

2Ø VERTICAL W/ DOUBLE POLE TOP
6° TO 30°
2/0 ACSR MAX WIRE

REVISIONS

R	DATE	ENGR	OPS
1	11/15/17	CM	DK

PAGE: 2 of 2

B14,B14TREE

CAD FILE: B14

APP: LB/AH
DATE: 3/5/08

SECTION 320

FRONT VIEW

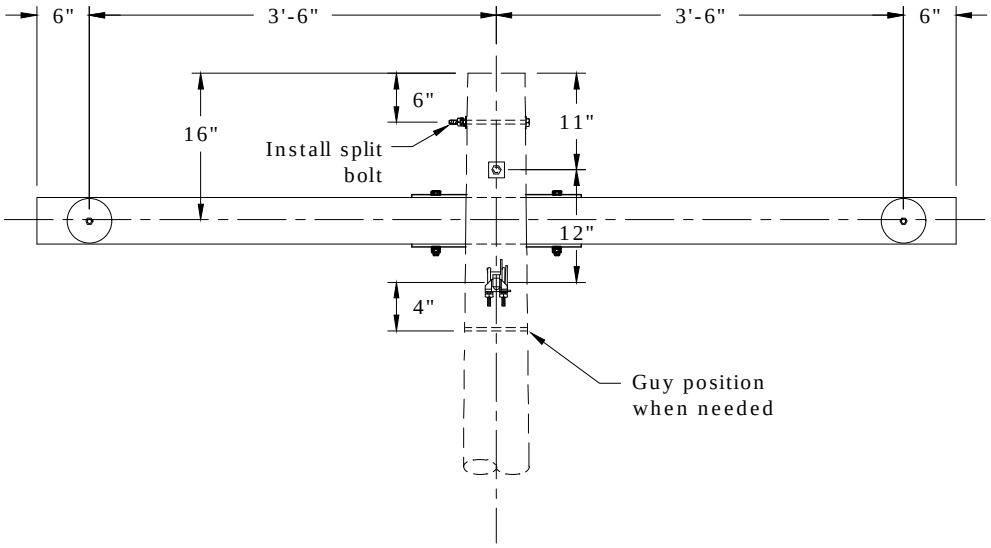

TOP VIEW

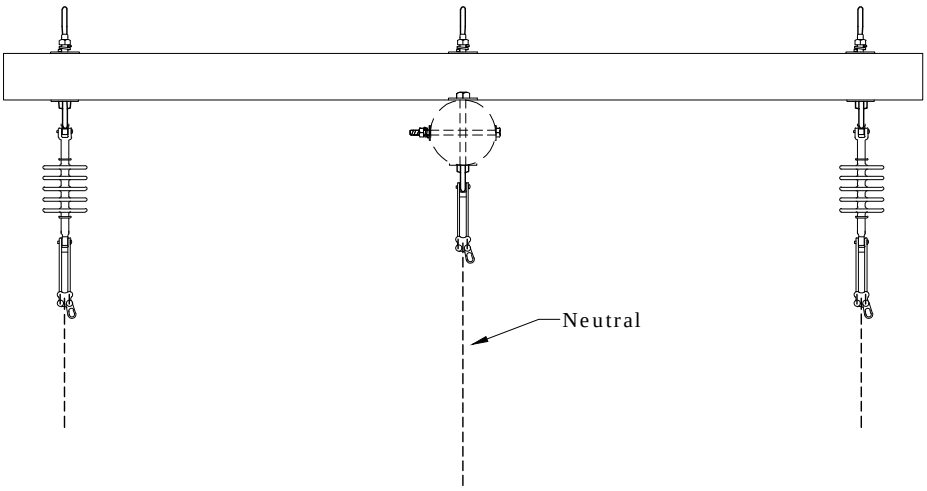

Notes:

1. This framing is for clearance limited situations only.
2. See Std AC - Avian Covers - Section 400 if needed. Covers only required on neutral.

Rev. 1 - Updated material list and added avian notes.

Clark Public Utilities

CONSTRUCTION STANDARDS

8' PRE-ASSEMBLED DEADEND
HIGH NEUTRAL
2/0 ACSR MAX WIRE

REVISIONS

R	DATE	ENGR	OPS
1	11/15/17	CM	DK

PAGE:		CAD FILE:	APP: LB/AH	SECTION
1 of 2	B48A	B48A	DATE: 3/5/08	320

CR26A

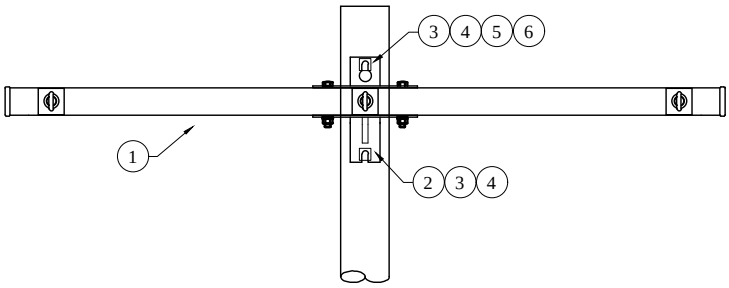

PR24

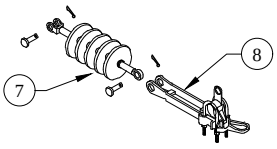

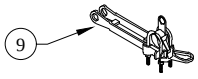

Neutral

Road & Field Phases

Rev. 1 - Updated material list and added avian notes.

ITEM NO.	DESCRIPTION	B48A CR26A QTY.	S/N
1	Arm, Deadend Assembly, 8', 3-position, 397 Max	1	2508
2	Bolt, Machine, 3/4" x 14", Galv., 18,350 lbs Ultimate Tensile	1	174
3	Washer, Lock, Spring, Double Coil, Galv., 3/4"	2	2218
4	Washer, Curved, Square, Cast, 3" x 3" x 3/8" Thick x 13/16" Hole	2	1392
5	Nut, Eye Oval 3/4"	1	914
6	Bolt, Machine 3/4" x 16", Galv., 18,350 lbs Ultimate Tensile	1	175
ITEM NO.	**DESCRIPTION**	**PR24 (2) QTY.**	**S/N**
7	Insulator, Suspension 15 kV Clevis-Tongue, Polymer	2	1967
8	Clamp, Strain, Distribution #2 to 397.5	2	302
ITEM NO.	**DESCRIPTION**	**ADDITIONAL MATERIAL QTY.**	**S/N**
9	Clamp, Strain #2	1	300

Clark Public Utilities

CONSTRUCTION STANDARDS

8' PRE-ASSEMBLED DEADEND
HIGH NEUTRAL
2/0 ACSR MAX WIRE

REVISIONS

R	DATE	ENGR	OPS
1	11/15/17	CM	DK

PAGE: 2 of 2

B48A

CAD FILE: B48A

APP: LB/AH
DATE: 3/5/08

SECTION 320

FRONT VIEW

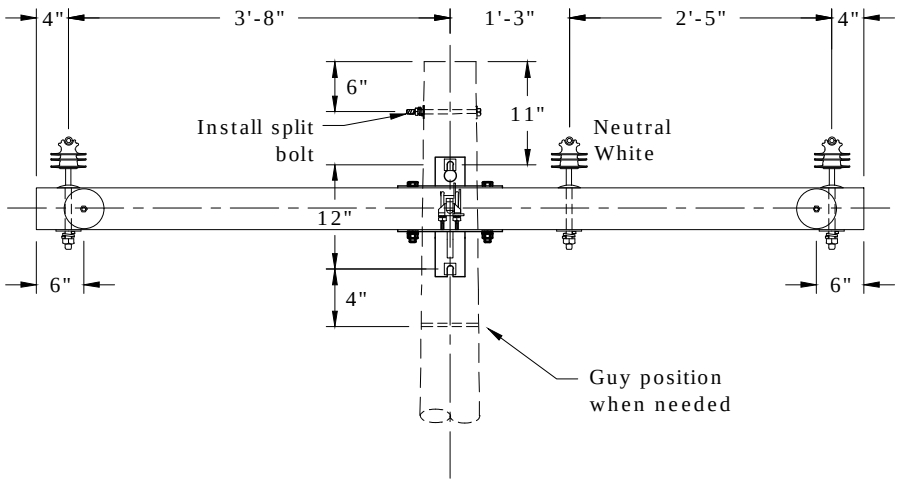

TOP VIEW

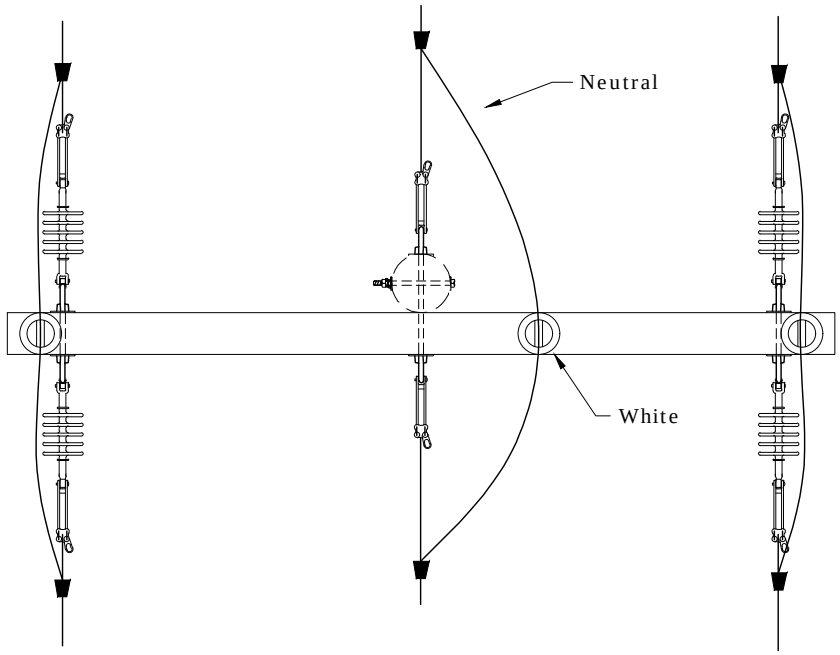

Notes:

1. This framing is for clearance limited situations only.
2. See Std AC - Avian Covers - Section 400 if needed. Covers and covered jumper only required on neutral.

Rev. 5 - Eliminated porcelain pin insulators and added avian notes.

Clark Public Utilities

CONSTRUCTION STANDARDS

8' PRE-ASSEMBLED DOUBLE DEADEND
HIGH NEUTRAL
2/0 ACSR MAX WIRE

REVISIONS

R	DATE	ENGR	OPS
2	3/02	REDRAWN	IN CAD
3	3/5/08	LB	AH
4	7/29/10	KJP	
5	11/15/17	CM	DK

PAGE: 1 of 2

B49A,B49ATREE

CAD FILE: B49A

APP: ELM

DATE: 1/31/80

SECTION 320

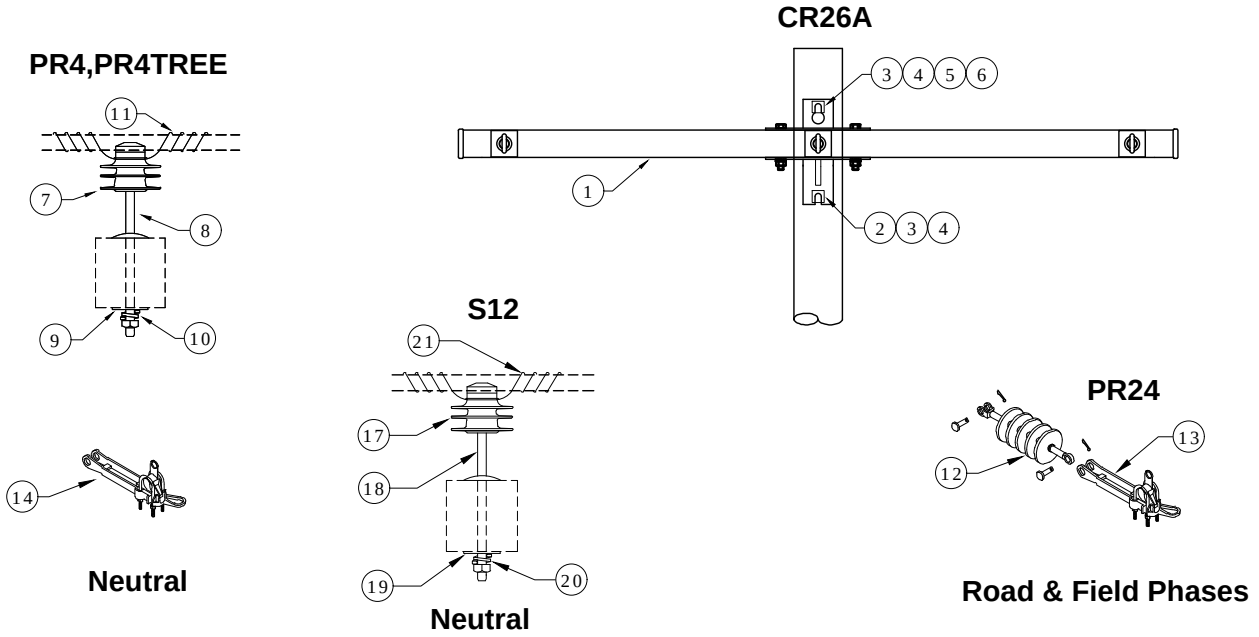

Rev. 5 - Eliminated porcelain pin insulators and added avian notes.

ITEM NO.	DESCRIPTION	B49ATREE CR26A QTY.	B49ATREE CR26A S/N	B49A CR26A QTY.	B49A CR26A S/N
1	Arm, Deadend Assembly, 8', 3-position, 397 Max	1	2508	1	2508
2	Bolt, Machine 3/4" x 14", Galv., 18,350 lbs Ultimate Tensile	1	174	1	174
3	Washer, Lock, Spring, Double Coil, Galv., 3/4"	2	2218	2	2218
4	Washer, Curved, Square, Cast, 3" x 3" x 3/8" Thick x 13/16" Hole	2	1392	2	1392
5	Nut, Eye Oval 3/4"	1	914	1	914
6	Bolt, Machine 3/4" x 16", Galv., 18,350 lbs Ultimate Tensile	1	175	1	175
ITEM NO.	DESCRIPTION	PR4TREE (2) QTY.	PR4TREE (2) S/N	PR4 (2) QTY.	PR4 (2) S/N
7	Insulator, Pin, C Neck, Polymer	2	1968	2	1968 ✲
8	Pin, Crossarm	2	961	2	961
9	Washer, Square, Flat 5/8", 2 1/4" x 2 1/4"	2	1412	2	1412
10	Washer, Lock, Spring, Double Coil, Galv., 5/8"	2	2217	2	2217
11	Wire, Tie, AL Annealed #4 SD	22 ✲	3012	20	1421
ITEM NO.	DESCRIPTION	PR24 (4) QTY.	PR24 (4) S/N	PR24 (4) QTY.	PR24 (4) S/N
12	Insulator, Suspension 15 kV Clevis-Tongue, Polymer	4	1967	4	1967
13	Clamp, Strain, Distribution #2 to 397.5	4	302	4	302
ITEM NO.	DESCRIPTION	ADDITIONAL MATERIAL QTY.	ADDITIONAL MATERIAL S/N	ADDITIONAL MATERIAL QTY.	ADDITIONAL MATERIAL S/N
14	Clamp, Strain #2	2	300	2	300
15	Connector, Tap, Wedge 2/0 to 2/0	4	2559	4	2559
16	Connector, Tap, Wedge #2 to #2	2	2688	2	2688
ITEM NO.	DESCRIPTION	S12 QTY.	S12 S/N	S12 QTY.	S12 S/N
17	Insulator, Pin, C Neck, White Polymer	1	2656	1	2656 ✲
18	Pin, Crossarm	1	961	1	961
19	Washer, Square, Flat, 5/8", 2 1/4" x 2 1/4"	1	1412	1	1412
20	Washer, Lock, Spring, Double Coil, Galv., 5/8"	1	2217	1	2217
21	Wire, Tie, AL Annealed #4 SD	10	1421	10	1421

Clark Public Utilities

CONSTRUCTION STANDARDS

8' PRE-ASSEMBLED DOUBLE DEADEND
HIGH NEUTRAL
2/0 ACSR MAX WIRE

REVISIONS

R	DATE	ENGR	OPS
2	3/02	REDRAWN	IN CAD
3	3/5/08	LB	AH
4	7/29/10	KJP	
5	11/15/17	CM	DK

PAGE: 2 of 2

B49A,B49ATREE

CAD FILE: B49A

APP: ELM
DATE: 1/31/80

SECTION 320

FRONT VIEW

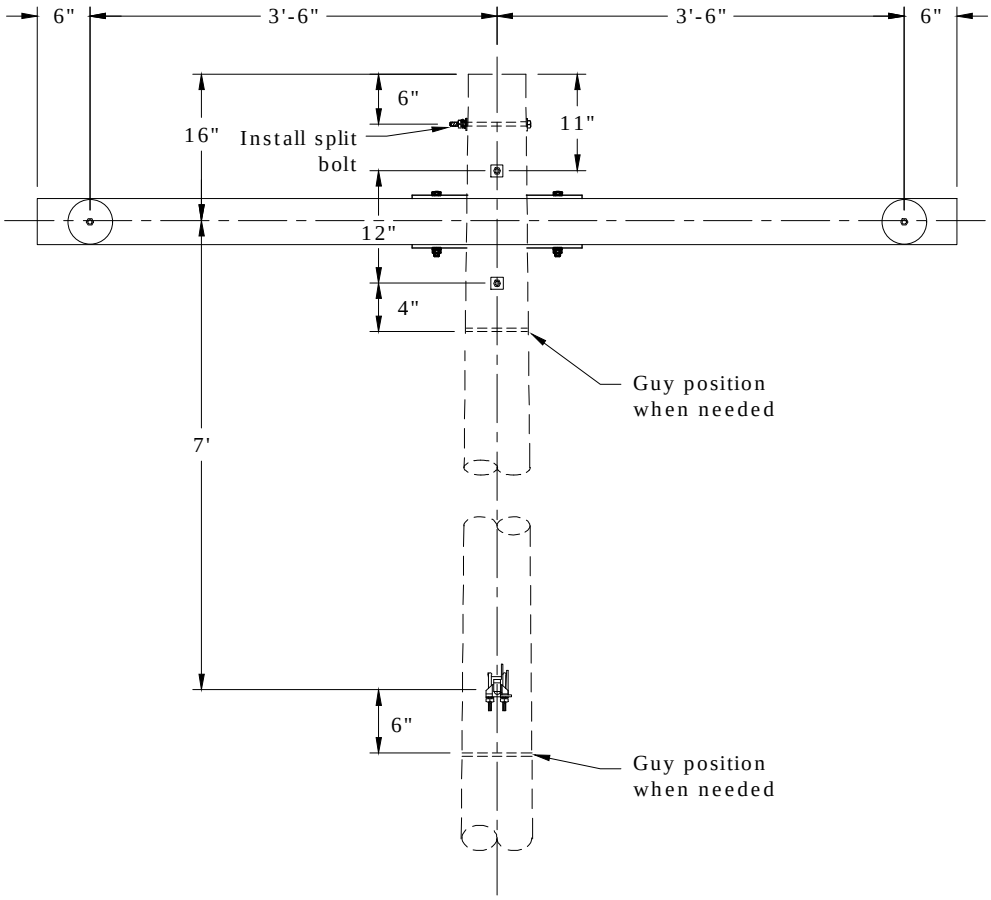

TOP VIEW

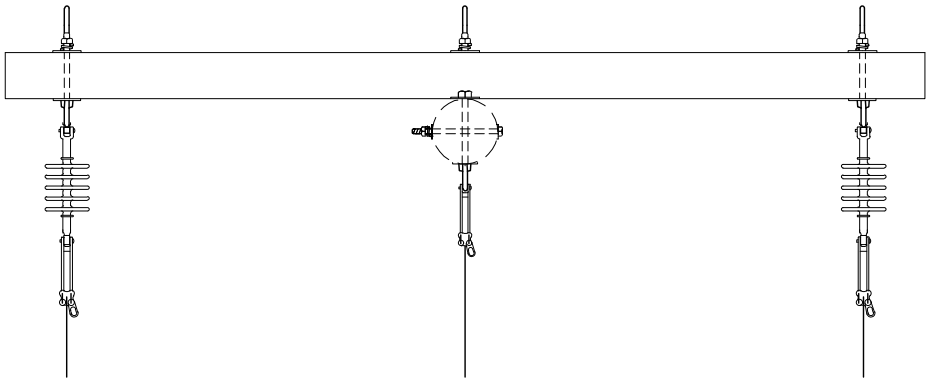

Avian Safe

Rev. 5 - Added avian note.

Clark Public Utilities

CONSTRUCTION STANDARDS

8' PRE-ASSEMBLED DEADEND
2/0 ACSR MAX WIRE

REVISIONS

R	DATE	ENGR	OPS
2	3/02	REDRAWN	IN CAD
3	3/5/08	LB	AH
4	7/29/10	KJP	
5	11/15/17	CM	DK

PAGE:		CAD FILE:	APP: ELM	SECTION
1 of 2	B50A	B50A	DATE: 1/31/80	320

BACK VIEW

CR26A

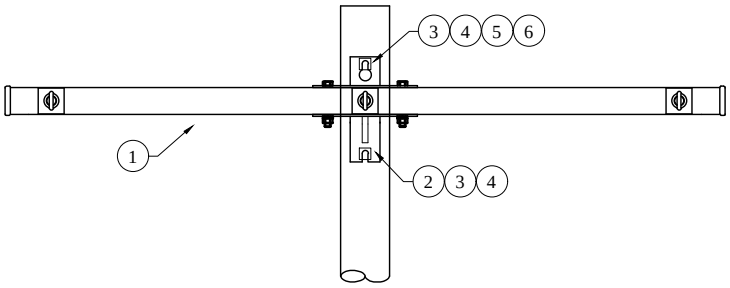

PR24

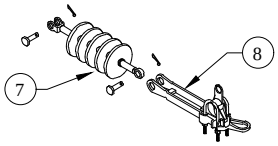

Road & Field Phases

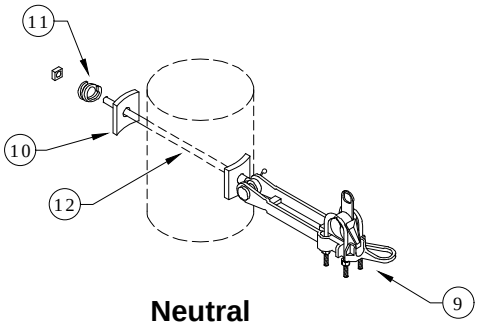

Neutral

Rev. 5 - Added avian note.

ITEM NO.	DESCRIPTION	B50A CR26A QTY.	S/N
1	Arm, Deadend Assembly, 8', 3-position, 397 Max	1	2508
2	Bolt, Machine 3/4" x 14", Galv., 18,350 lbs Ultimate Tensile	1	174
3	Washer, Lock, Spring, Double Coil, Galv., 3/4"	2	2218
4	Washer, Curved, Square, Cast, 3" x 3" x 3/8" Thick x 13/16" Hole	2	1392
5	Nut, Eye Oval 3/4"	1	914
6	Bolt, Machine 3/4" x 16", Galv., 18,350 lbs Ultimate Tensile	1	175
ITEM NO.	**DESCRIPTION**	**PR24 (2) QTY.**	**S/N**
7	Insulator, Suspension 15 kV Clevis-Tongue, Polymer	2	1967
8	Clamp, Strain, Distribution #2 to 397.5	2	302
ITEM NO.	**DESCRIPTION**	**ADDITIONAL MATERIAL QTY.**	**S/N**
9	Clamp, Strain #2	1	300
10	Washer, Curved, Square, Cast, 3" x 3" x 3/8" Thick x 13/16" Hole	2	1392
11	Washer, Lock, Spring, Double Coil, Galv., 5/8"	1	2217
12	Bolt, Eye 5/8" x 14", Galv., 12,400 lbs Ultimate Tensile	1	108

Clark Public Utilities

CONSTRUCTION STANDARDS

8' PRE-ASSEMBLED DEADEND
2/0 ACSR MAX WIRE

REVISIONS

R	DATE	ENGR	OPS
2	3/02	REDRAWN	IN CAD
3	3/5/08	LB	AH
4	7/29/10	KJP	
5	11/15/17	CM	DK

PAGE: 2 of 2

B50A

CAD FILE: B50A

APP: ELM
DATE: 1/31/80

SECTION 320

FRONT VIEW

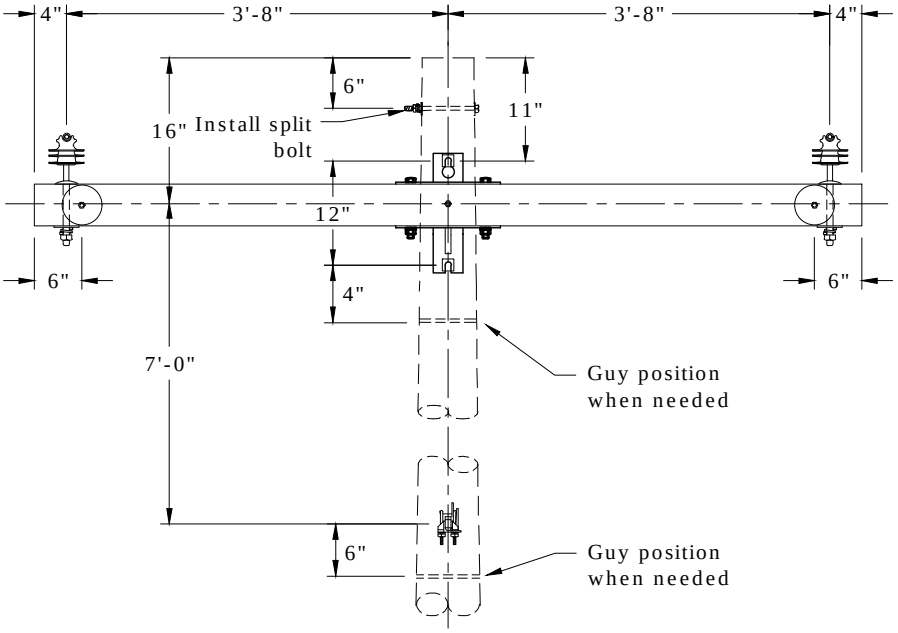

SIDE VIEW

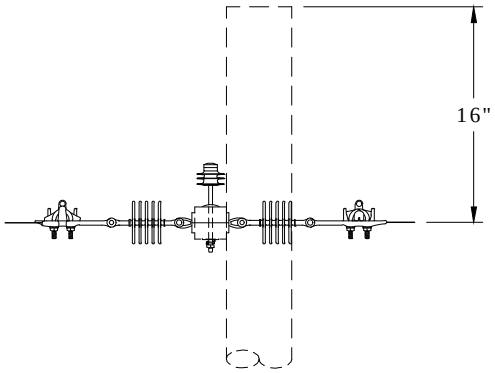

Avian Safe

Rev. 5 - Eliminated porcelain pin insulators and added avian notes.

Clark Public Utilities

CONSTRUCTION STANDARDS

8' PRE-ASSEMBLED DOUBLE DEADEND
2/0 ACSR MAX WIRE

REVISIONS

R	DATE	ENGR	OPS
2	3/02	REDRAWN	IN CAD
3	3/5/08	LB	AH
4	7/29/10	KJP	
5	11/15/17	CM	DK

PAGE: 1 of 3

B51A,B51ATREE

CAD FILE: B51A

APP: ELM

DATE: 1/31/80

SECTION 320

TOP VIEW

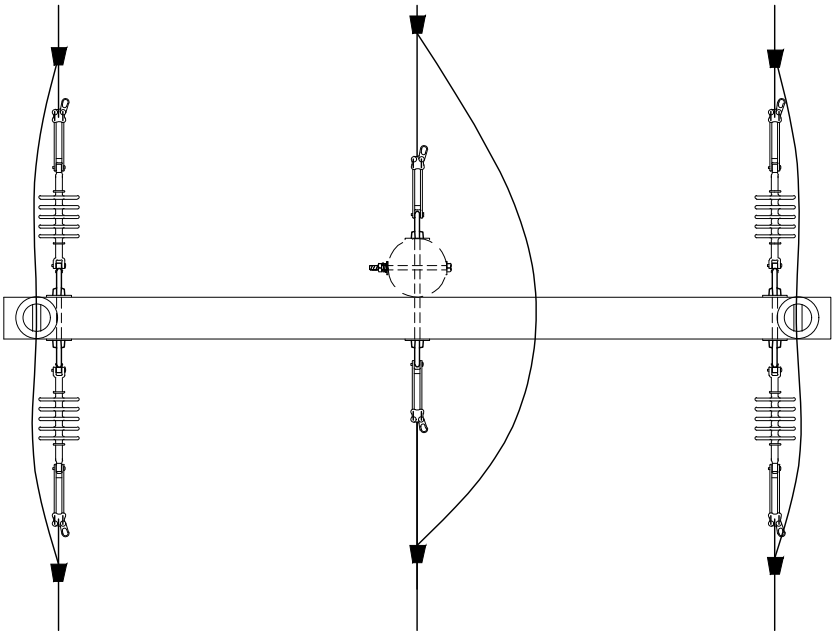

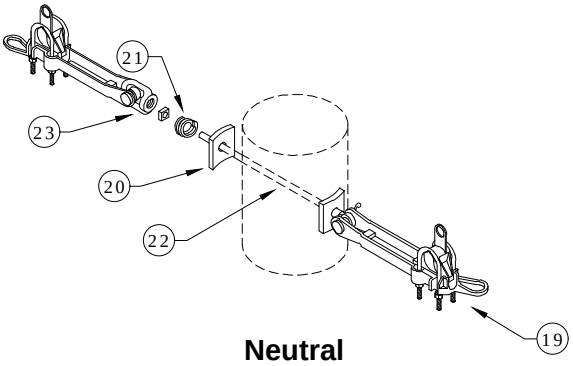

Neutral

PR24

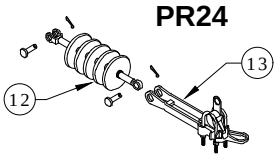

Road & Field Phases

Rev. 5 - Eliminated porcelain pin insulators and added avian notes.

Clark Public Utilities

CONSTRUCTION STANDARDS

8' PRE-ASSEMBLED DOUBLE DEADEND
2/0 ACSR MAX WIRE

REVISIONS

R	DATE	ENGR	OPS
2	3/02	REDRAWN	IN CAD
3	3/5/08	LB	AH
4	7/29/10	KJP	
5	11/15/17	CM	DK

PAGE: 2 of 3

B51A,B51ATREE

CAD FILE: B51A

APP: ELM

DATE: 1/31/80

SECTION 320

PR4,PR4TREE

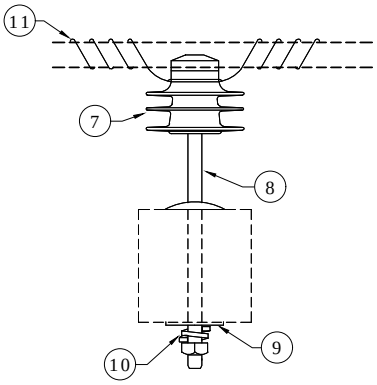

CR26A

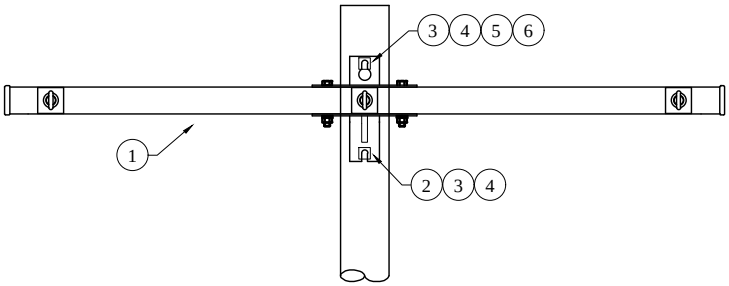

Rev. 5 - Eliminated porcelain pin insulators and added avian notes.

ITEM NO.	DESCRIPTION	B51ATREE CR26A QTY.	B51ATREE CR26A S/N	B51A CR26A QTY.	B51A CR26A S/N
1	Arm, Deadend Assembly, 8', 3-position, 397 Max	1	2508	1	2508
2	Bolt, Machine 3/4" x 14", Galv., 18,350 lbs Ultimate Tensile	1	174	1	174
3	Washer, Lock, Spring, Double Coil, Galv., 3/4"	2	2218	2	2218
4	Washer, Curved, Square, Cast, 3" x 3" x 3/8" Thick x 13/16" Hole	2	1392	2	1392
5	Nut, Eye Oval 3/4"	1	914	1	914
6	Bolt, Machine 3/4" x 16", Galv., 18,350 lbs Ultimate Tensile	1	175	1	175
ITEM NO.	**DESCRIPTION**	**PR4TREE (2) QTY.**	**PR4TREE (2) S/N**	**PR4 (2) QTY.**	**PR4 (2) S/N**
7	Insulator, Pin, C Neck, Polymer	2	1968	2	1968 ✲
8	Pin, Crossarm	2	961	2	961
9	Washer, Square, Flat 5/8", 2 1/4" x 2 1/4"	2	1412	2	1412
10	Washer, Lock, Spring, Double Coil, Galv., 5/8"	2	2217	2	2217
11	Wire, Tie, AL Annealed #4 SD	22 ✲	3012	20	1421
ITEM NO.	**DESCRIPTION**	**PR24 (4) QTY.**	**PR24 (4) S/N**	**PR24 (4) QTY.**	**PR24 (4) S/N**
12	Insulator, Suspension 15 kV Clevis-Tongue, Polymer	4	1967	4	1967
13	Clamp, Strain, Distribution #2 to 397.5	4	302	4	302
ITEM NO.	**DESCRIPTION**	**ADDITIONAL MATERIAL QTY.**	**ADDITIONAL MATERIAL S/N**	**ADDITIONAL MATERIAL QTY.**	**ADDITIONAL MATERIAL S/N**
17	Connector, Tap, Wedge, 2/0 to 2/0	4	2559	4	2559
18	Connector, Tap, Wedge, #2 to #2	2	2688	2	2688
19	Clevis, Strain #2	2	300	2	300
20	Washer, Curved, Square, Cast, 3" x 3" x 3/8" Thick x 13/16" Hole	2	1392	2	1392
21	Washer, Lock, Spring, Double Coil, Galv., 5/8"	1	2217	1	2217
22	Bolt, Eye 5/8" x 14", Galv., 12,400 lbs Ultimate Tensile	1	108	1	108
23	Nut, Eye Oval 5/8"	1	913	1	913

Clark Public Utilities

CONSTRUCTION STANDARDS

8' PRE-ASSEMBLED DOUBLE DEADEND
2/0 ACSR MAX WIRE

REVISIONS

R	DATE	ENGR	OPS
2	3/02	REDRAWN	IN CAD
3	3/5/08	LB	AH
4	7/29/10	KJP	
5	11/15/17	CM	DK

PAGE: 3 of 3

B51A,B51ATREE

CAD FILE: B51A

APP: ELM

DATE: 1/31/80

SECTION 320

330
3Ø Distribution
Up to 397MCM AAC

2/11/2025

C	C1B, -TREE	3Ø Single 10' Crossarm - 0° to 5°
C	C2B, -TREE	3Ø Double 10' Crossarm - 6° to 15°
C	C3B, -TREE	3Ø Double 10' Crossarm w/ Angle Pins - 16° to 30°
C	C4B, -TREE	3Ø Single 10' Crossarm - High Neutral, 0° to 5°
C	C5B, -TREE	3Ø Double 10' Crossarm - High Neutral, 6° to 15°
C	C6B, -TREE	3Ø Double 10' Crossarm - High Neutral, 16° to 30°
C	C7A, -TREE	3Ø Single 8' Crossarm w/ Pole Top - 0° to 5°
C	C7AVIAN	3Ø Single 10’ Crossarm w/ Pole Top - 0° to 5° - Avian Retrofit
C	C8A, -TREE	3Ø Double 8' Crossarm w/ Pole Top - 6° to 15°
C	C8AVIAN	3Ø Double 10’ Crossarm w/ Pole Top - 6° to 15° - Avian Retrofit
C	C9A, -TREE	3Ø Double 8' Crossarm w/ Double Pole Top - 16° to 30°
C	C9AVIAN	3Ø Double 10’ Crossarm w/Double Pole Top - 16° to 30° - Avian Retrofit
~	C10, -TREE	3Ø Twiggy w/ Pole Top - 0° to 5°
~	C11, -TREE	3Ø Twiggy w/ Pole Top - 6° to 15°
~	C12, -TREE	3Ø Twiggy - 16° to 30°
~	C13, -TREE	3Ø Vertical w/ Pole Top - 0° to 5°
~	C14, -TREE	3Ø Vertical w/ Double Pole Top - 6° to 15°
~	C15, -TREE	3Ø Vertical - 16° to 30°
~	C16, -TREE	3Ø Double Twiggy Circuit - 0° to 5°
~	C17, -TREE	3Ø Double Twiggy Circuit - 6° to 30°
C	C19B, -TREE	3Ø Single 10' Crossarm - Double Circuit - 0° to 5°
C	C20B, -TREE	3Ø Double 10' Crossarm - Double Circuit - 6° to 15°
~	C22, -TREE	3Ø Twiggy Transmission Underbuild - 0° to 5°
~	C23, -TREE	3Ø Twiggy Transmission Underbuild - 6° to 30°

N	New Standard
R	Redrawn Standard
C	Changed Standard
~	No Change

330 (Continued)
3Ø Distribution
Up to 397MCM AAC

2/11/2025

~	C48B	10' Pre-assembled Deadend - High Neutral
~	C49B, -TREE	10' Pre-assembled Double Deadend - High Neutral
~	C50A	8' Pre-assembled Deadend
~	C51A, -TREE	8' Pre-assembled Double Deadend
~	C52B	10' Pre-assembled Deadend
~	C53B, -TREE	10' Pre-assembled Double Deadend

N	New Standard
R	Redrawn Standard
C	Changed Standard
~	No Change

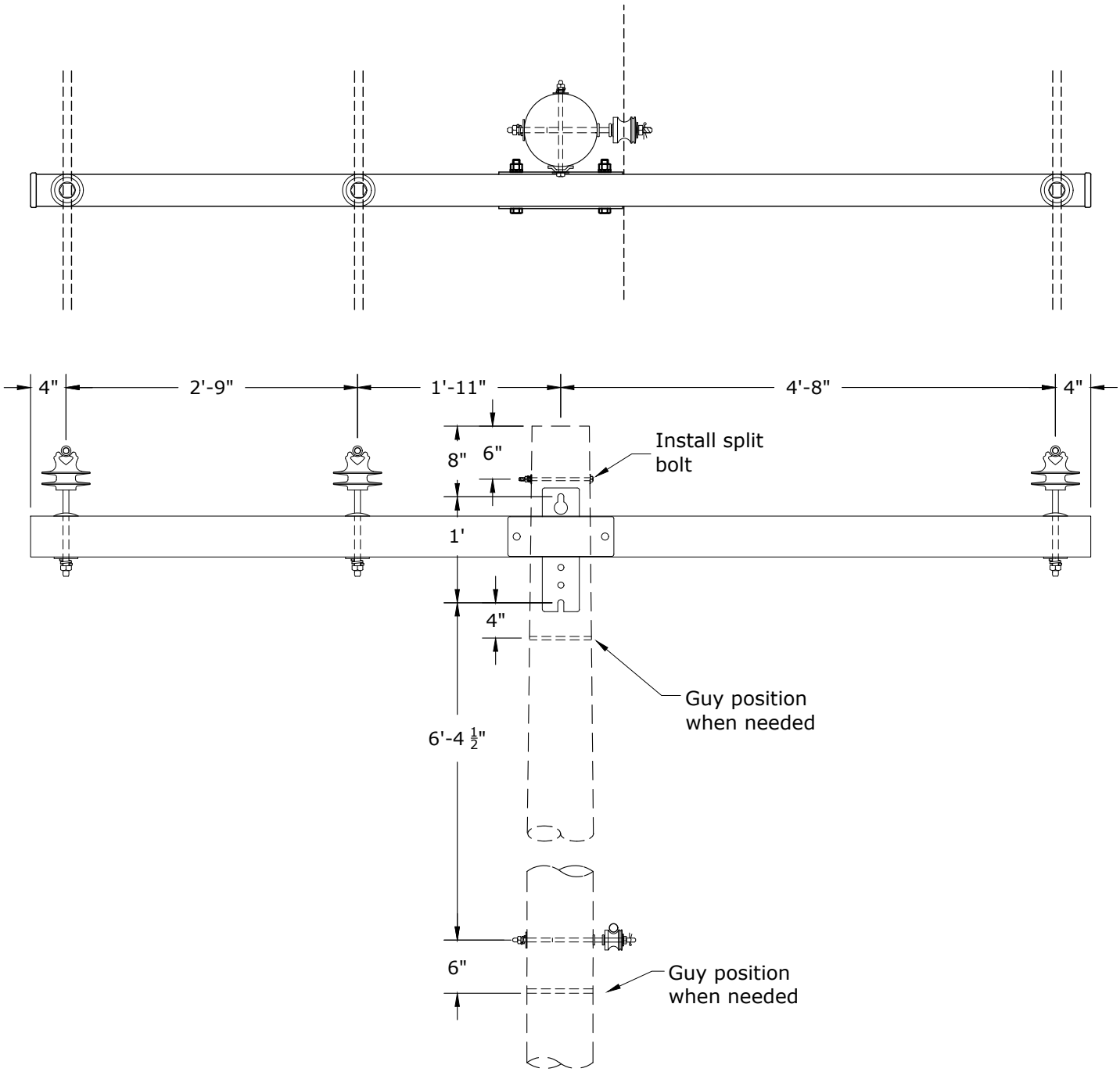

C1BTREE - Avian Safe

Notes:

1. Maximum line angle calculated for 3,000 lb MWT and 250-ft ruling span.
2. Std C7A,C7ATREE is preferred for crossarm construction. Use this standard for underbuild or other special installations.
3. See Std AC - Avian Covers - Section 400 if needed. Covers only required on center phase.

Rev. 2 - Changed to fiberglass crossarms.

Clark Public Utilities

CONSTRUCTION STANDARDS

3Ø SINGLE 10' CROSSARM
0° TO 5°
397 AAC MAX WIRE

REVISIONS

R	DATE	ENGR	OPS
1	12/4/17	CM	DK
2	2/11/25	CM	GM

PAGE: 1 of 2

C1B,C1BTREE

CAD FILE: C1B

APP: LB/AH
DATE: 10/18/07

SECTION 330

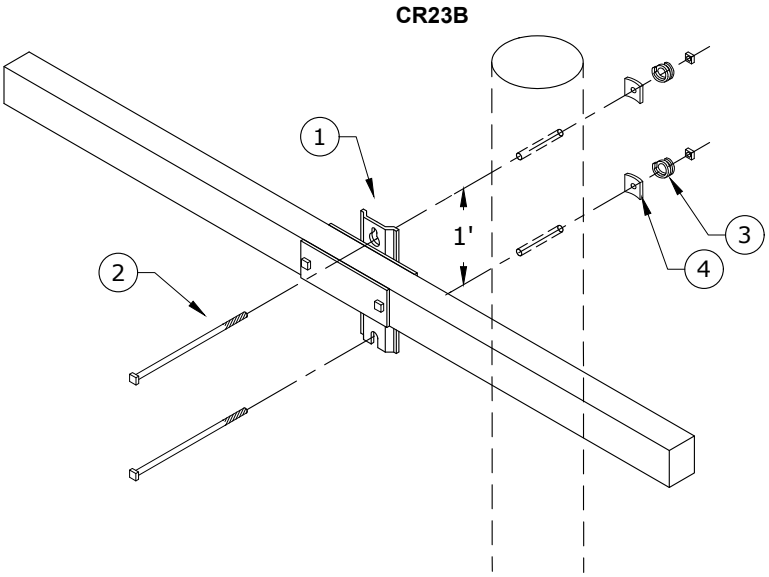

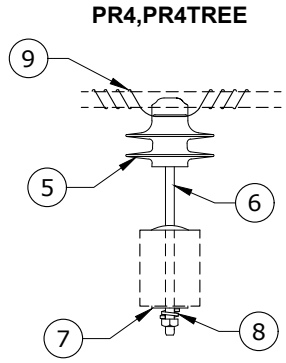

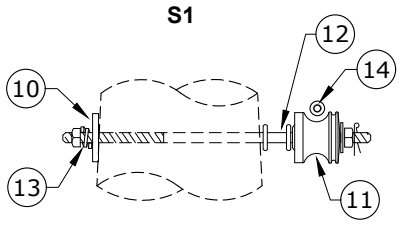

Neutral

Rev. 2 - Changed to fiberglass crossarms.

ITEM NO	DESCRIPTION	C1BTREE CR23B ✲ QTY	C1BTREE CR23B ✲ S/N	C1B CR23B ✲ QTY	C1B CR23B ✲ S/N
1	Crossarm, Distribution, Fiberglass, 10' Long x 3-5/8" Wide x 4-5/8" High	1	3031	1	3031
2	Bolt, Machine, 5/8" x 14", Galv, 12,400 lb Ultimate Tensile	2	156	2	156
3	Washer, Lock, Spring, Double Coil, Galv, 5/8"	2	2217	2	2217
4	Washer, Curved, Square, Cast, 3" x 3" x 3/8" Thick x 13/16" Hole	2	1392	2	1392
ITEM NO	DESCRIPTION	PR4TREE(3) QTY	PR4TREE(3) S/N	PR4 (3) QTY	PR4 (3) S/N
5	Insulator, Pin, C Neck, Polymer	3	1968	3	1968
6	Pin, Crossarm	3	961	3	961
7	Washer, Square, Flat 5/8", 2 1/4" x 2 1/4"	3	1412	3	1412
8	Washer, Lock, Spring, Double Coil, Galv, 5/8"	3	2217	3	2217
9	Wire, Tie, AL Annealed #4 SD	33	3012	30	1421
ITEM NO	DESCRIPTION	S1 QTY	S1 S/N	S1 QTY	S1 S/N
10	Washer, Curved, Square, Cast, 3" x 3" x 3/8" Thick x 13/16" Hole	1	1392	1	1392
11	Insulator, Spool Clevis, Small, ANSI 53-2 Class	1	773	1	773
12	Bolt, Double Upset, 5/8" x 14", Galv, 12,400 lb Ultimate Tensile	1	1580	1	1580
13	Washer, Lock, Spring, Double Coil, Galv, 5/8"	1	2217	1	2217
14	Wire, Tie, AL Annealed #4 SD	10	1421	10	1421

Clark Public Utilities

CONSTRUCTION STANDARDS

3Ø SINGLE 10' CROSSARM
0° TO 5°
397 AAC MAX WIRE

REVISIONS

R	DATE	ENGR	OPS
1	12/4/17	CM	DK
2	2/11/25	CM	GM

PAGE: 2 of 2

C1B,C1BTREE

CAD FILE: C1B

APP: LB/AH
DATE: 10/18/07

SECTION 330

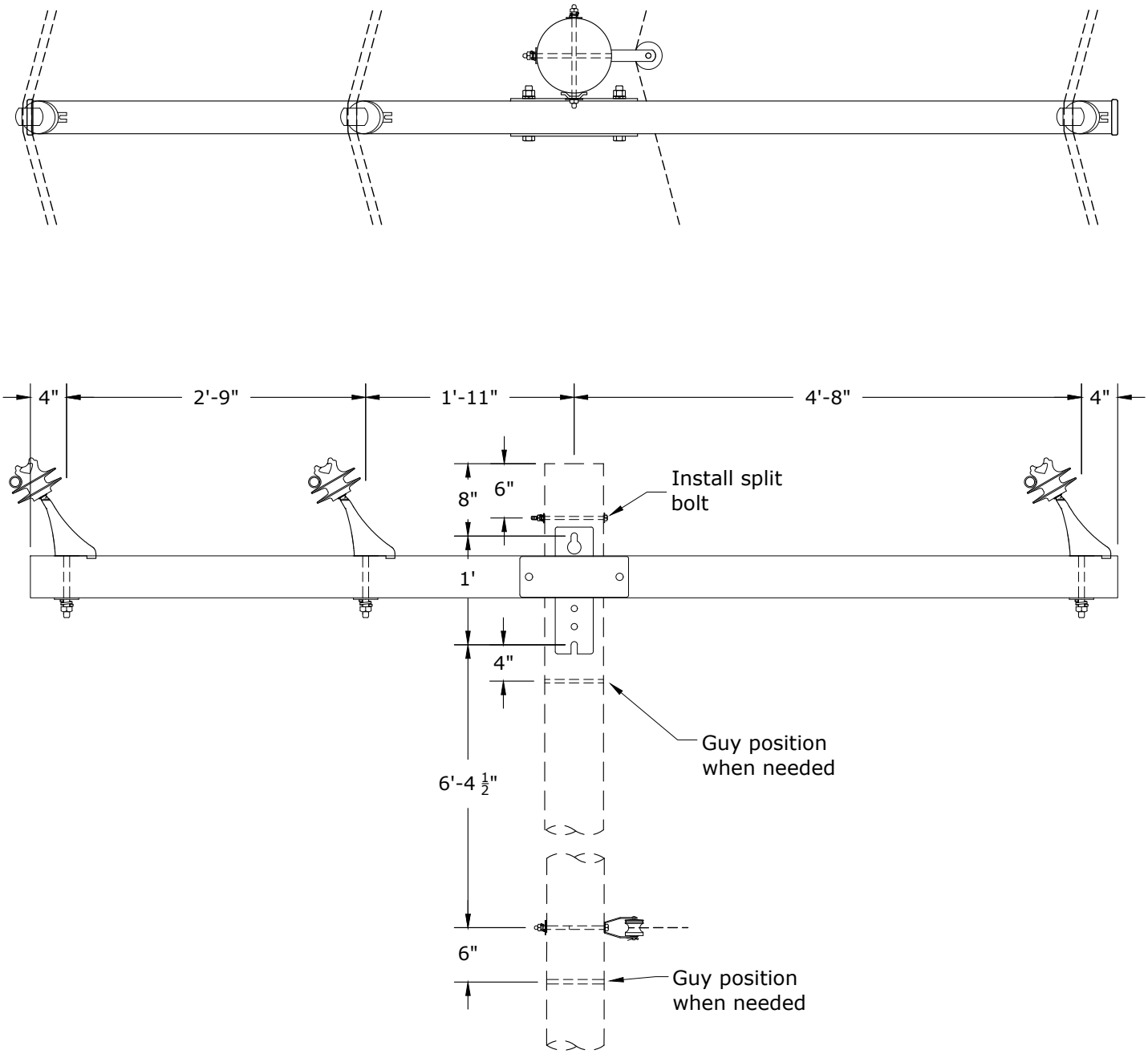

C2BTREE - Avian Safe

Notes:

1. Maximum line angle calculated for 3,000 lb MWT and 250-ft ruling span.
2. Std C8A,C8ATREE is preferred for crossarm construction. Use this standard for underbuild or other special installations.
3. See Std AC - Avian Covers - Section 400 if needed. Covers only required on center phase.

Rev. 4 - Changed to single fiberglass crossarm with angle pins.

Clark Public Utilities

CONSTRUCTION STANDARDS

3Ø SINGLE 10' CROSSARM
6° TO 15°
397 AAC MAX WIRE

REVISIONS

R	DATE	ENGR	OPS
1	3/02	REDRAWN	IN CAD
2	1/21/08	LB	AH
3	12/4/17	CM	DK
4	2/11/25	CM	GM

PAGE: 1 of 2

C2B,C2BTREE

CAD FILE: C2B

APP: LB/AH

DATE: 10/18/07

SECTION 330

PR5,PR5TREE

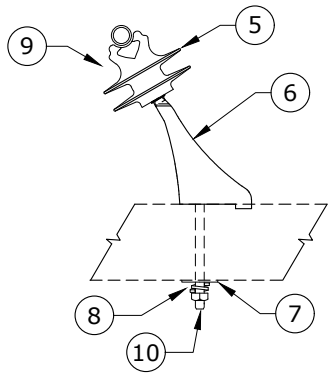

CR23B

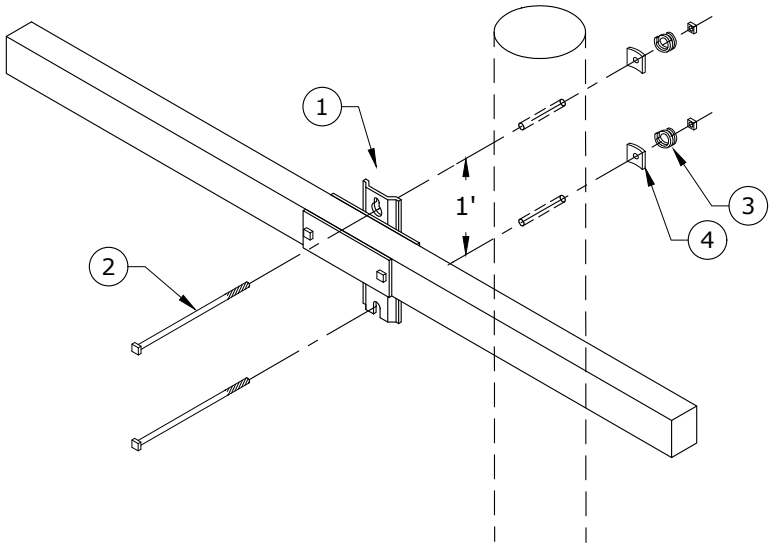

S2

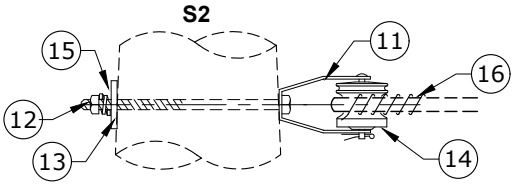

Neutral

Rev. 4 - Changed to single fiberglass crossarm with angle pins.

ITEM NO	DESCRIPTION	C2BTREE CR23B ✲ QTY	C2BTREE CR23B ✲ S/N	C2B CR23B ✲ QTY	C2B CR23B ✲ S/N
1	Crossarm, Distribution, Fiberglass, 10' Long x 3-5/8" Wide x 4-5/8" High	1	3031	1	3031
2	Bolt, Machine, 5/8" x 14", Galv, 12,400 lb Ultimate Tensile	2	156	2	156
3	Washer, Lock, Spring, Double Coil, Galv, 5/8"	2	2217	2	2217
4	Washer, Curved, Square, Cast, 3" x 3" x 3/8" Thick x 13/16" Hole	2	1392	2	1392

ITEM NO	DESCRIPTION	PR5TREE(3) QTY	PR5TREE(3) S/N	PR5 (3) QTY	PR5 (3) S/N
5	Insulator, Pin, C Neck, Polymer	3	1968	3	1968
6	Pin, Angle, Crossarm	3	2658	3	2658
7	Washer, Square Flat, 5/8", 2 1/4" x 2 1/4"	3	1412	3	1412
8	Washer, Lock, Spring, Double Coil, Galv, 5/8"	3	2217	3	2217
9	Wire, Tie, AL Annealed #4 SD	33	3012	30	1421
10	Bolt, Machine, 5/8" x 7", Galv, 12,400 lb Ultimate Tensile	3	2606	3	2606

ITEM NO	DESCRIPTION	S2 QTY	S2 S/N	S2 QTY	S2 S/N
11	Clevis, D.E. Insulator 1340	1	335	1	335
12	Bolt, Machine, 5/8" x 14", Galv, 12,400 lb Ultimate Tensile	1	156	1	156
13	Washer, Curved, Square, Cast, 3" x 3" x 3/8" Thick x 13/16" Hole	1	1392	1	1392
14	Insulator, Spool Clevis, Small, ANSI 53-2 Class	1	773	1	773
15	Washer, Lock, Spring, Double Coil, Galv, 5/8"	1	2217	1	2217
16	Wire, Tie, AL Annealed #4 SD	10	1421	10	1421

Clark Public Utilities

CONSTRUCTION STANDARDS

3Ø SINGLE 10' CROSSARM
6° TO 15°
397 AAC MAX WIRE

REVISIONS

R	DATE	ENGR	OPS
1	3/02	REDRAWN	IN CAD
2	1/21/08	LB	AH
3	12/4/17	CM	DK
4	2/11/25	CM	GM

PAGE: 2 of 2

C2B,C2BTREE

CAD FILE: C2B

APP: LB/AH

DATE: 10/18/07

SECTION 330

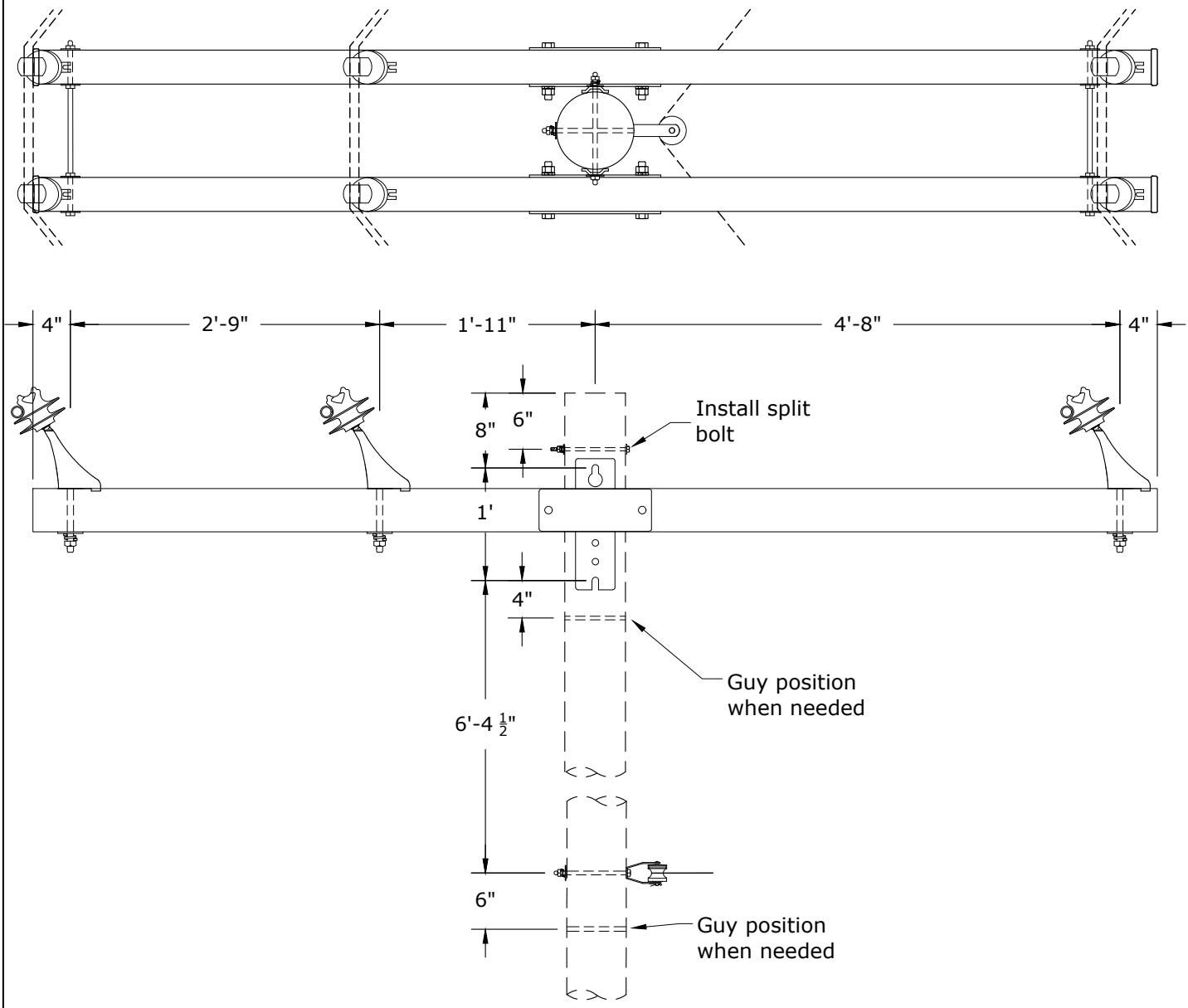

C3BTREE - Avian Safe

Notes:

1. Maximum line angle calculated for 3,000 lb MWT and 250-ft ruling span.
2. Std C9A,C9ATREE is preferred for crossarm construction. Use this standard for underbuild or other special installations.
3. See Std AC - Avian Covers - Section 400 if needed. Covers only required on center phase.

Rev. 2 - Changed to fiberglass crossarms.

Clark Public Utilities

CONSTRUCTION STANDARDS

3Ø DOUBLE 10' CROSSARM W/ ANGLE PINS
16° TO 30°
397 AAC MAX WIRE

PAGE: 1 of 2

C3B,C3BTREE

CAD FILE: C3B

REVISIONS

R	DATE	ENGR	OPS
1	12/4/17	CM	DK
2	2/11/25	CM	GM

APP: LB/AH
DATE: 10/18/07

SECTION 330

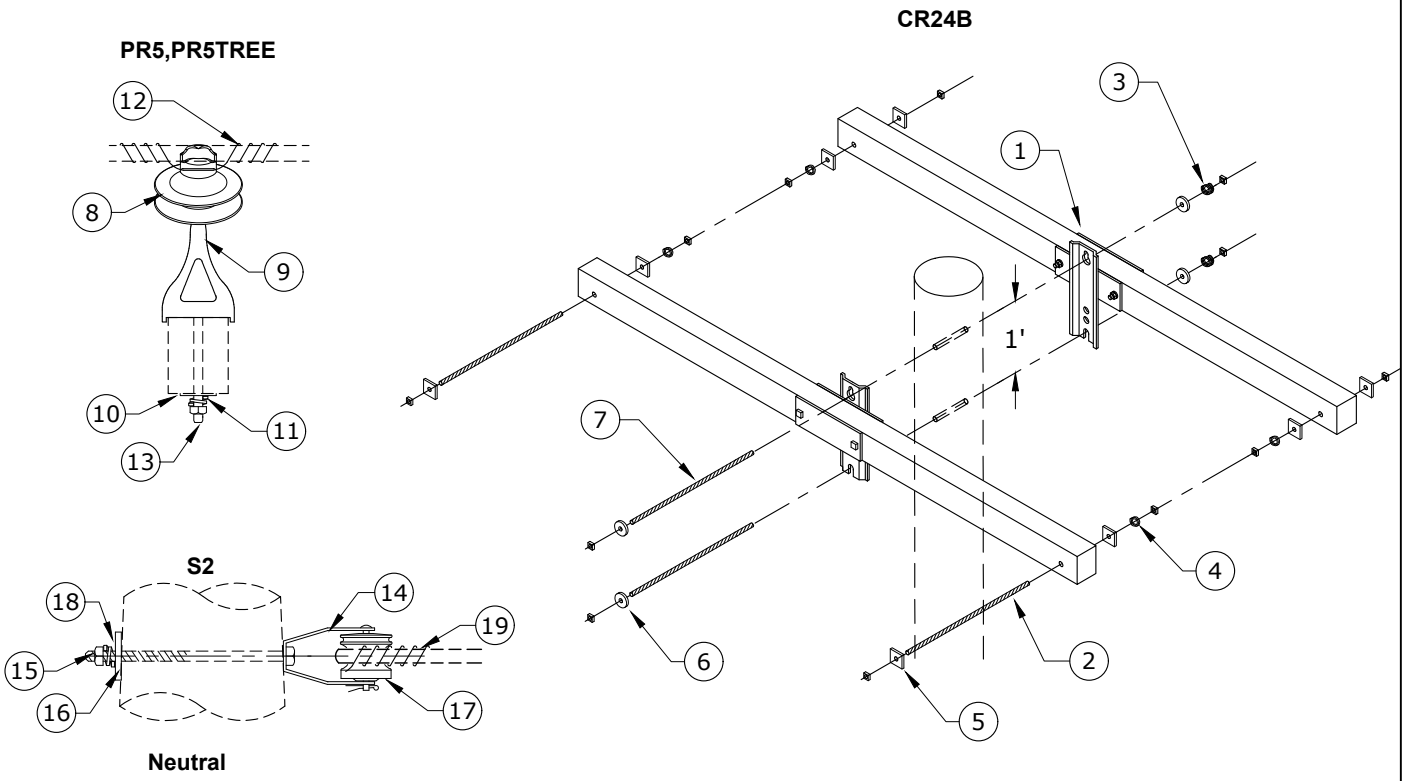

Rev. 2 - Changed to fiberglass crossarms.

ITEM NO	DESCRIPTION	C3BTREE CR24B ✲ QTY	C3BTREE CR24B ✲ S/N	C3B CR24B ✲ QTY	C3B CR24B ✲ S/N
1	Crossarm, Distribution, Fiberglass, 10' Long x 3-5/8" Wide x 4-5/8" High	2	3031	2	3031
2	Bolt, Double, Arm, 5/8" x 20", Galv, 12,400 lb Ultimate Tensile	2	83	2	83
3	Washer, Lock, Spring, Double Coil, Galv, 5/8"	2	2217	2	2217
4	Washer, Lock, Spring, Single Coil, Galv, 5/8"	4	1403	4	1403
5	Washer, Square, Flat 5/8", 2 1/4" x 2 1/4"	8	1412	8	1412
6	Washer, Round, Flat, Glav, 5/8"	4	1395	4	1395
7	Bolt, Double, Arm, 5/8" x 16", Galv, 12,400 lb Ultimate Tensile	2	81	2	81
ITEM NO	DESCRIPTION	PR5TREE(6) QTY	PR5TREE(6) S/N	PR5 (6) QTY	PR5 (6) S/N
8	Insulator, Pin, C Neck, Polymer	6	1968	6	1968
9	Pin, Angle, Crossarm	6	2658	6	2658
10	Washer, Square, Flat, 5/8", 2 1/4" x 2 1/4"	6	1412	6	1412
11	Washer, Lock, Spring, Double Coil, Galv, 5/8"	6	2217	6	2217
12	Wire, Tie, AL Annealed #4 SD	66	3012	60	1421
13	Bolt, Machine, 5/8" x 7", Galv, 12,400 lb Ultimate Tensile	6	2606	6	2606
ITEM NO	DESCRIPTION	S2 QTY	S2 S/N	S2 QTY	S2 S/N
14	Clevis, D.E. Insulator 1340	1	335	1	335
15	Bolt, Machine, 5/8" x 14", Galv, 12,400 lb Ultimate Tensile	1	156	1	156
16	Washer, Curved, Square, Cast, 3" x 3" x 3/8" Thick x 13/16" Hole	1	1392	1	1392
17	Insulator, Spool Clevis, Small, ANSI 53-2 Class	1	773	1	773
18	Washer, Lock, Spring, Double Coil, Galv, 5/8"	1	2217	1	2217
19	Wire, Tie, AL Annealed #4 SD	10	1421	10	1421

Clark Public Utilities

CONSTRUCTION STANDARDS

3Ø DOUBLE 10' CROSSARM W/ ANGLE PINS
16° TO 30°
397 AAC MAX WIRE

REVISIONS

R	DATE	ENGR	OPS
1	12/4/17	CM	DK
2	2/11/25	CM	GM

PAGE: 2 of 2

C3B,C3BTREE

CAD FILE: C3B

APP: LB/AH
DATE: 10/18/07

SECTION 330

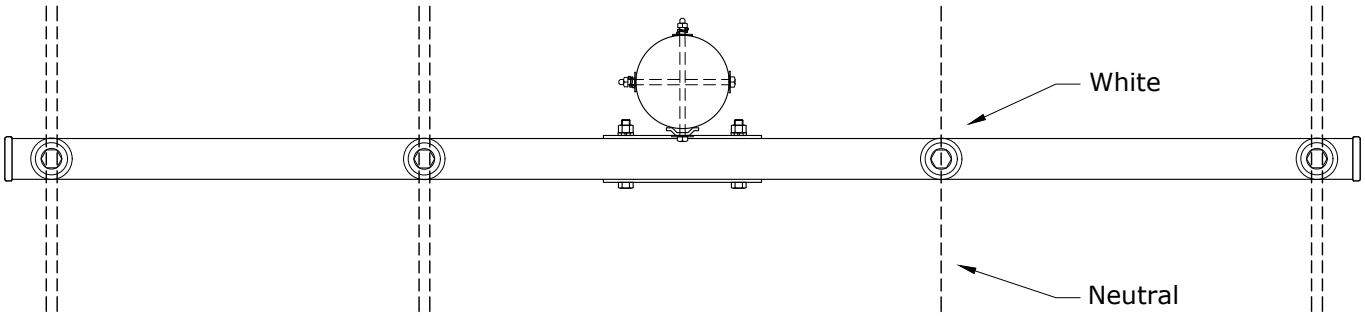

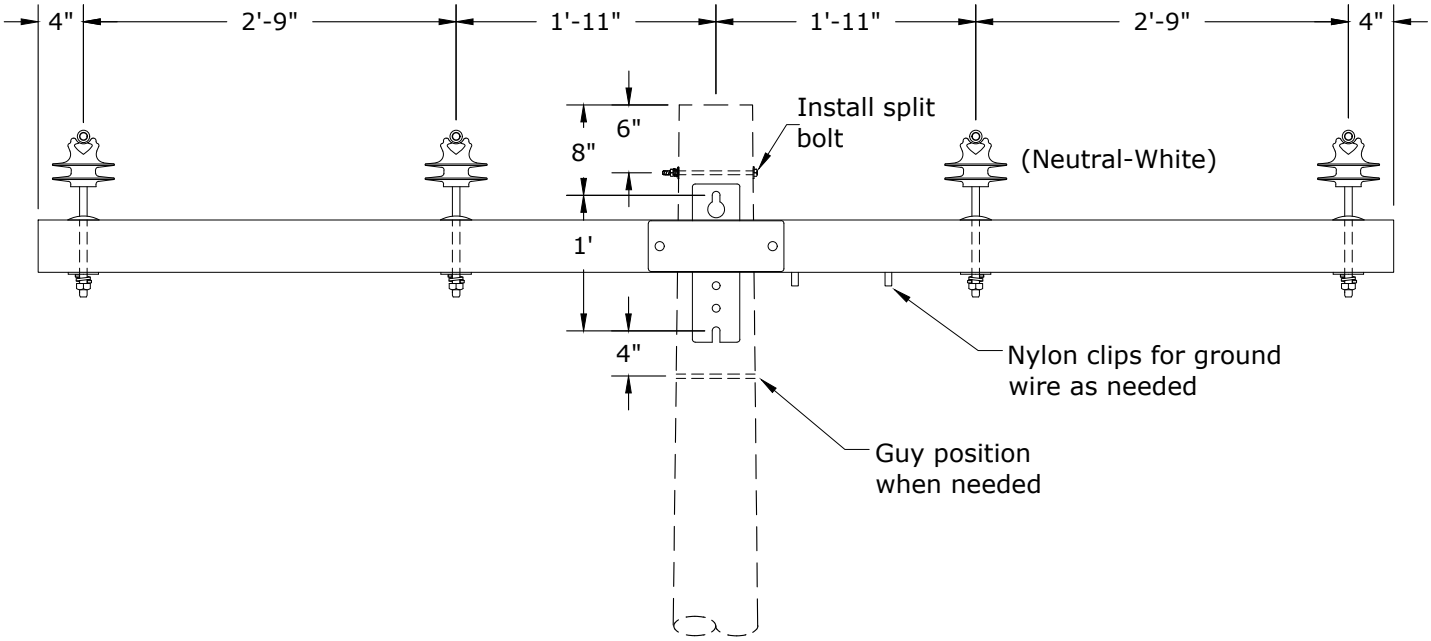

C4BTREE - Avian Safe

Notes:

1. Maximum line angle calculated for 3,000 lb MWT and 250-ft ruling span.
2. This framing is for clearance limited situations only.
3. See Std AC - Avian Covers - Section 400 if needed. Covers only required on center phase and neutral.

Rev. 4 - Changed to fiberglass crossarm.

Clark Public Utilities

CONSTRUCTION STANDARDS

3Ø SINGLE 10' CROSSARM
HIGH NEUTRAL, 0° TO 5°
397 AAC MAX WIRE

REVISIONS

R	DATE	ENGR	OPS
1	3/02	REDRAWN	IN CAD
2	10/18/07	LB	AH
3	12/4/17	CM	DK
4	2/11/25	CM	GM

PAGE: 1 of 2

C4B,C4BTREE

CAD FILE: C4B

APP: ELM

DATE: 1/31/80

SECTION 330

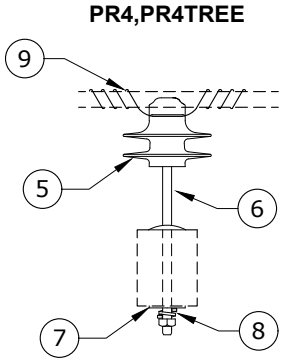

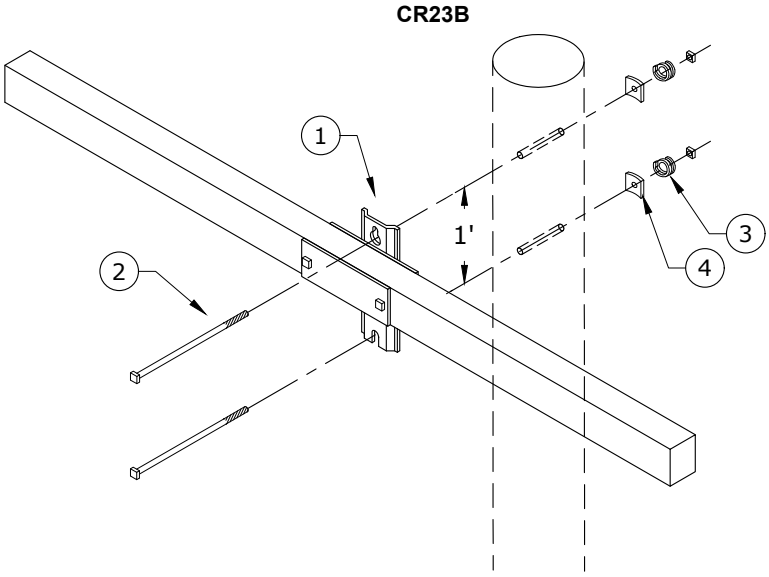

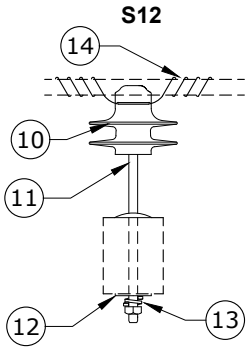

Neutral-White

Rev. 4 - Changed to fiberglass crossarm.

ITEM NO	DESCRIPTION	C4BTREE CR23B✲ QTY	C4BTREE CR23B✲ S/N	C4B CR23B✲ QTY	C4B CR23B✲ S/N
1	Crossarm, Distribution, Fiberglass, 10' Long x 3-5/8" Wide x 4-5/8" High	1	3031	1	3031
2	Bolt, Machine, 5/8" x 14", Galv, 12,400 lb Ultimate Tensile	2	156	2	156
3	Washer, Lock, Spring, Double Coil, Galv, 5/8"	2	2217	2	2217
4	Washer, Curved, Square, Cast, 3" x 3" x 3/8" Thick x 13/16" Hole	2	1392	2	1392
ITEM NO	DESCRIPTION	PR4TREE (3) QTY	PR4TREE (3) S/N	PR4 (3) QTY	PR4 (3) S/N
5	Insulator, Pin, C Neck, Polymer	3	1968	3	1968
6	Pin, Crossarm	3	961	3	961
7	Washer, Square, Flat, 5/8", 2 1/4" x 2 1/4"	3	1412	3	1412
8	Washer, Lock, Spring, Double Coil, Galv, 5/8"	3	2217	3	2217
9	Wire, Tie, AL Annealed #4 SD	33	3012	30	1421
ITEM NO	DESCRIPTION	S12 QTY	S12 S/N	S12 QTY	S12 S/N
10	Insulator, Pin, C Neck, White Polymer	1	2656	1	2656
11	Pin, Crossarm	1	961	1	961
12	Washer, Square Flat, 5/8", 2 1/4" x 2 1/4"	1	1412	1	1412
13	Washer, Lock, Spring, Double Coil, Galv, 5/8"	1	2217	1	2217
14	Wire, Tie, AL Annealed #4 SD	10	1421	10	1421
ITEM NO	DESCRIPTION	Additional Materials QTY	Additional Materials S/N	Additional Materials QTY	Additional Materials S/N
15	Clips, Nylon, 1/4"	2	2996	2	2996
16	Screw, Self-tapping, #10 x 1", Hex Washer Head, TEK, Stainless Steel	2	2997	2	2997

Clark Public Utilities

CONSTRUCTION STANDARDS

3Ø SINGLE 10' CROSSARM
HIGH NEUTRAL, 0° TO 5°
397 AAC MAX WIRE

REVISIONS

R	DATE	ENGR	OPS
1	3/02	REDRAWN	IN CAD
2	10/18/07	LB	AH
3	12/4/17	CM	DK
4	2/11/25	CM	GM

PAGE: 2 of 2

C4B,C4BTREE

CAD FILE: C4B

APP: ELM
DATE: 1/31/80

SECTION 330

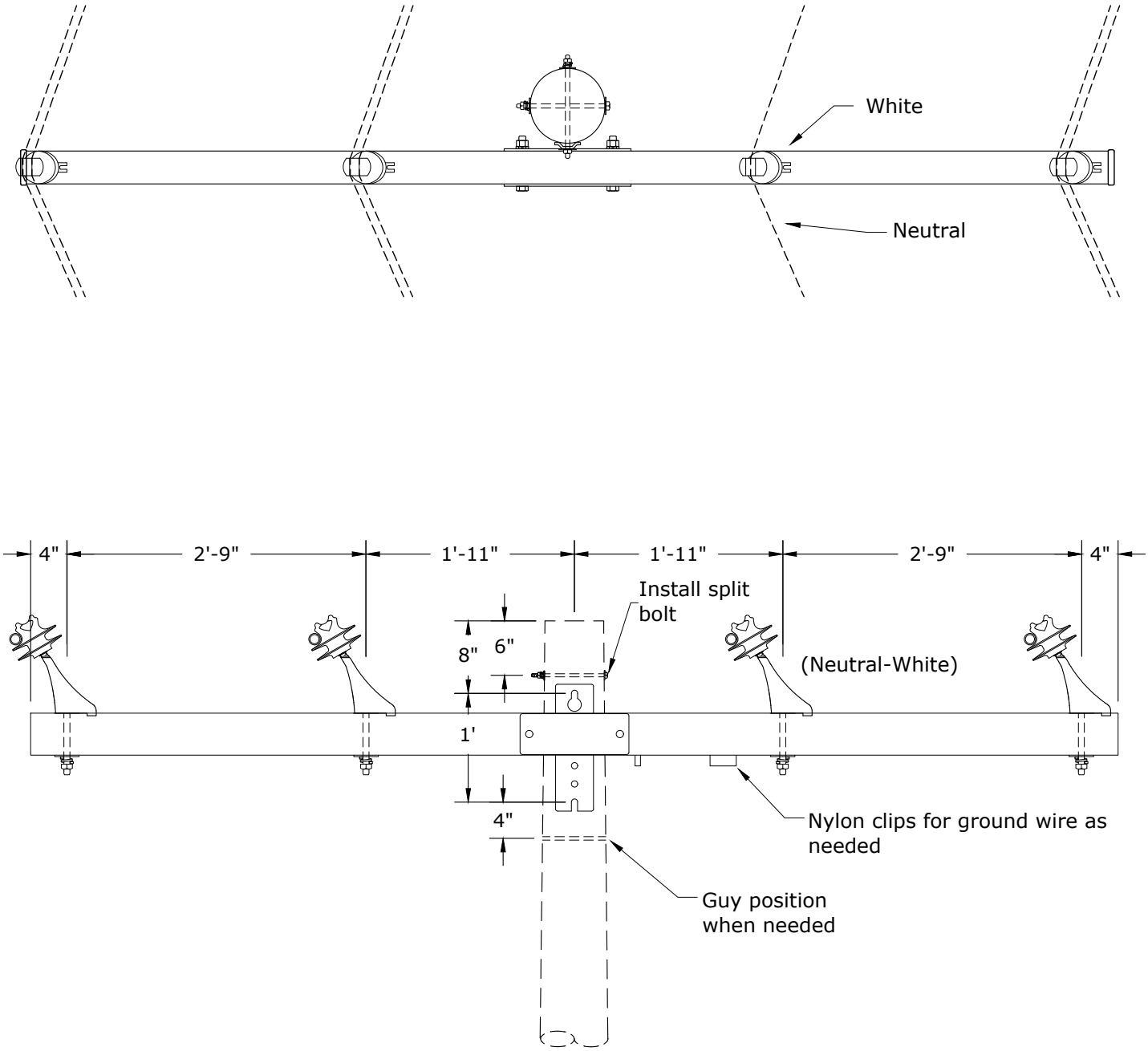

C5BTREE - Avian Safe

Notes:

1. Maximum line angle calculated for 3,000 lb MWT and 250-ft ruling span.
2. This framing is for clearance limited situations only.
3. See Std AC - Avian Covers - Section 400 if needed. Covers only required on center phase and neutral.

Rev. 4 - Changed to single fiberglass crossarms with angle pins.

Clark Public Utilities

CONSTRUCTION STANDARDS

3Ø SINGLE 10' CROSSARM
HIGH NEUTRAL, 6° TO 15°
397 AAC MAX WIRE

REVISIONS

R	DATE	ENGR	OPS
1	3/02	REDRAWN	IN CAD
2	10/18/07	LB	AH
3	12/4/17	CM	DK
4	2/11/25	CM	GM

PAGE: 1 of 2

C5B,C5BTREE

CAD FILE: C5B

APP: ELM
DATE: 1/31/80

SECTION 330

PR5,PR5TREE

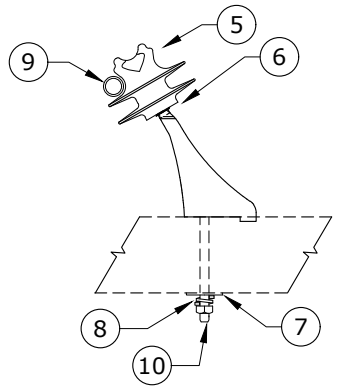

CR23B

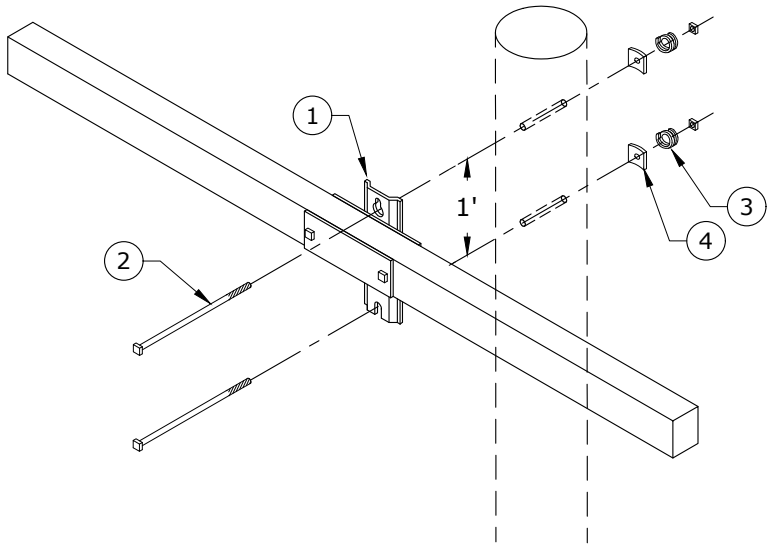

S14

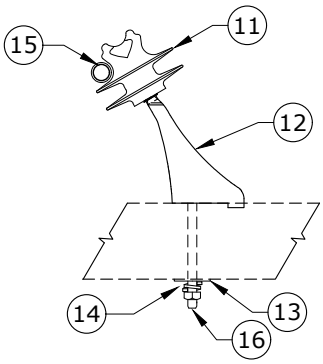

Neutral-White

Rev. 4 - Changed to single fiberglass crossarm with angle pin.

ITEM NO	DESCRIPTION	C5BTREE CR23B QTY	C5BTREE CR23B S/N	C5B CR23B QTY	C5B CR23B S/N
1	Crossarm, Distribution, Fiberglass, 10' Long x 3-5/8" Wide x 4-5/8" High	1	3031	1	3031
2	Bolt, Machine, 5/8" x 14", Galv, 12,400 lb Ultimate Tensile	2	156	2	156
3	Washer, Lock, Spring, Double Coil, Galv, 5/8"	2	2217	2	2217
4	Washer, Curved, Square, Cast, 3" x 3" x 3/8" Thick x 13/16" Hole	2	1392	2	1392
ITEM NO	**DESCRIPTION**	**PR5TREE(3) QTY**	**PR5TREE(3) S/N**	**PR5 (3) QTY**	**PR5 (3) S/N**
5	Insulator, Pin, C Neck, Polymer	3	1968	3	1968
6	Pin, Angle, Crossarm	3	2658	3	2658
7	Washer, Square Flat, 5/8", 2 1/4" x 2 1/4"	3	1412	3	1412
8	Washer, Lock, Spring, Double Coil, Galv, 5/8"	3	2217	3	2217
9	Wire, Tie, AL Annealed #4 SD	33	3012	30	1421
10	Bolt, Machine, 5/8" x 7", Galv, 12,400 lb Ultimate Tensile	3	2606	3	2606
ITEM NO	**DESCRIPTION**	**S14 QTY**	**S14 S/N**	**S14 QTY**	**S14 S/N**
11	Insulator, Pin, C Neck, White, Polymer	1	2656	1	2656
12	Pin, Angle, Crossarm	1	2658	1	2658
13	Washer, Square, Flat, 5/8", 2 1/4" x 2 1/4"	1	1412	1	1412
14	Washer, Lock, Spring, Double Coil, Galv, 5/8"	1	2217	1	2217
15	Wire, Tie, AL Annealed #4 SD	10	1421	10	1421
16	Bolt, Machine, 5/8" x 7", Galv, 12,400 lb Ultimate Tensile	1	2606	1	2606
ITEM NO	**DESCRIPTION**	**Additional Materials QTY**	**Additional Materials S/N**	**Additional Materials QTY**	**Additional Materials S/N**
17	Clips, Nylon, 1/4"	2	2996	2	2996
18	Screw, Self-tapping, #10 x 1", Hex Washer Head, TEK, Stainless Steel	2	2997	2	2997

Clark Public Utilities

CONSTRUCTION STANDARDS

3Ø SINGLE 10' CROSSARM
HIGH NEUTRAL, 6° TO 15°
397 AAC MAX WIRE

REVISIONS

R	DATE	ENGR	OPS
1	3/02	REDRAWN	IN CAD
2	10/18/07	LB	AH
3	12/4/17	CM	DK
4	2/11/25	CM	GM

PAGE: 2 of 2

C5B,C5BTREE

CAD FILE: C5B

APP: ELM
DATE: 1/31/80

SECTION 330

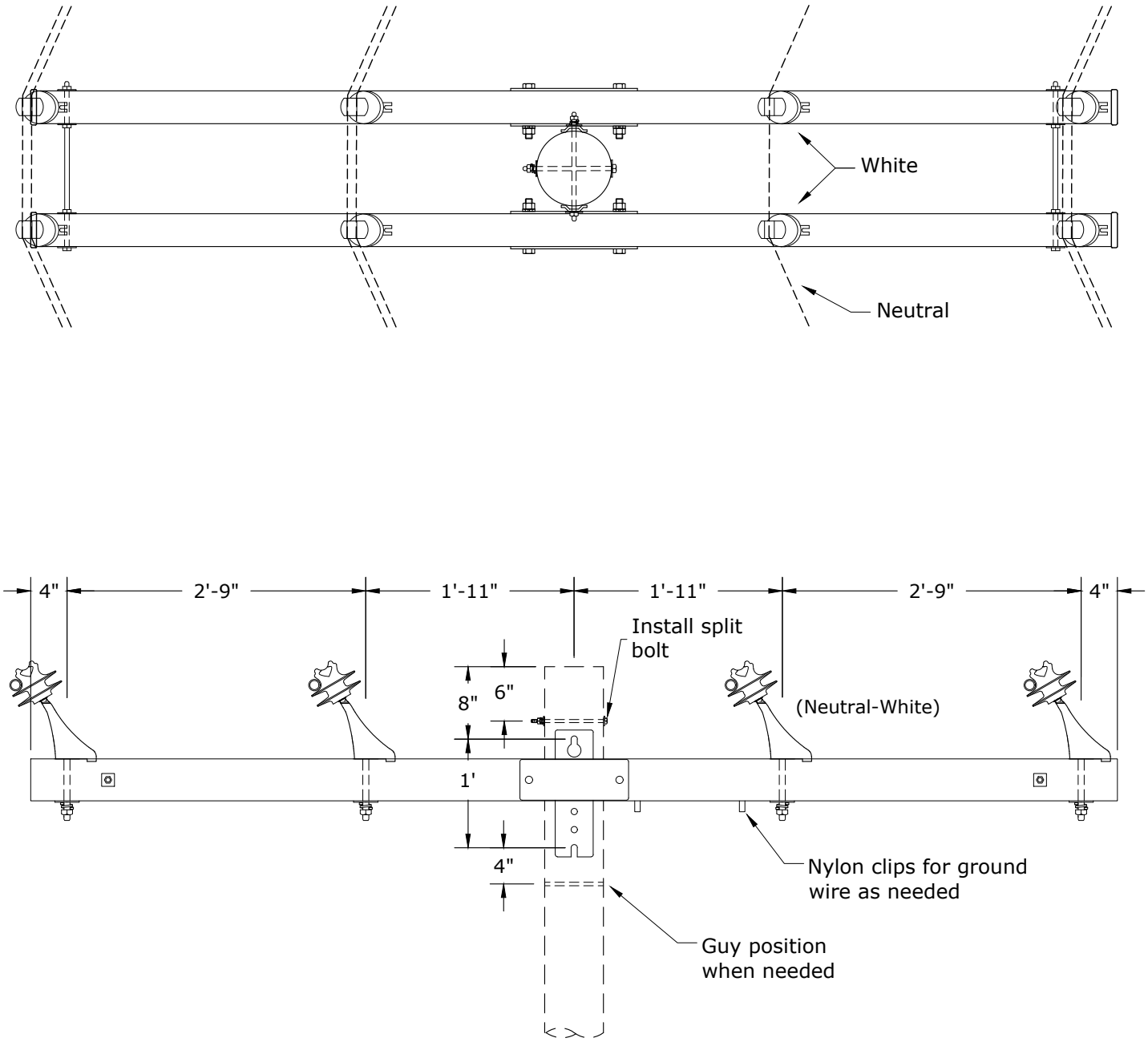

C6BTREE - Avian Safe

Notes:

1. Maximum line angle calculated for 3,000 lb MWT and 250-ft ruling span.
2. This framing is for clearance limited situations only.
3. See Std AC - Avian Covers - Section 400 if needed. Covers only required on center phase and neutral.

Rev. 2 - Changed to fiberglass crossarms.

Clark Public Utilities

CONSTRUCTION STANDARDS

3Ø DOUBLE 10' CROSSARM
HIGH NEUTRAL, 16° TO 30°
397 AAC MAX WIRE

REVISIONS

R	DATE	ENGR	OPS
1	12/4/17	CM	DK
2	2/11/25	CM	GM

PAGE: 1 of 2

C6B,C6BTREE

CAD FILE: C6B

APP: LB/AH

DATE: 10/18/07

SECTION 330

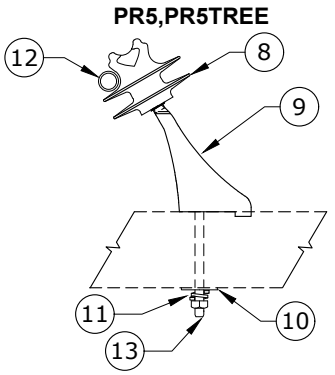

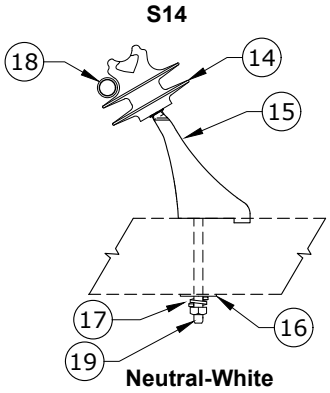

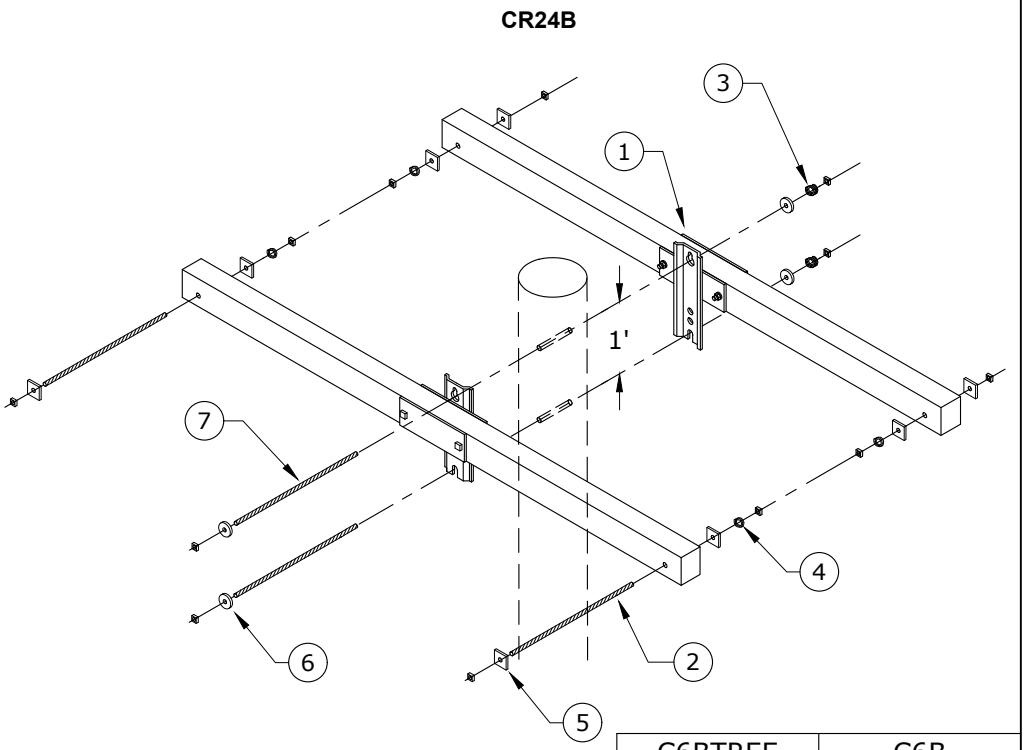

Rev. 2 - Changed to fiberglass crossarms.

ITEM NO	DESCRIPTION	C6BTREE CR24B ✲ QTY	C6BTREE CR24B ✲ S/N	C6B CR24B ✲ QTY	C6B CR24B ✲ S/N
1	Crossarm, Distribution, Fiberglass, 10' Long x 3-5/8" Wide x 4-5/8" High	2	3031	2	3031
2	Bolt, Double, Arm, 5/8" x 20", Galv, 12,400 lb Ultimate Tensile	2	83	2	83
3	Washer, Lock, Spring, Double Coil, Galv, 5/8"	2	2217	2	2217
4	Washer, Lock, Spring, Single Coil, Galv, 5/8"	4	1403	4	1403
5	Washer, Square, Flat 5/8", 2 1/4" x 2 1/4"	8	1412	8	1412
6	Washer, Round, Flat, Glav, 5/8"	4	1395	4	1395
7	Bolt, Double, Arm, 5/8" x 16", Galv, 12,400 lb Ultimate Tensile	2	81	2	81
ITEM NO	DESCRIPTION	PR5TREE(6) QTY	PR5TREE(6) S/N	PR5 (6) QTY	PR5 (6) S/N
8	Insulator, Pin, C Neck, Polymer	6	1968	6	1968
9	Pin, Angle, Crossarm	6	2658	6	2658
10	Washer, Square Flat, 5/8", 2 1/4" x 2 1/4"	6	1412	6	1412
11	Washer, Lock, Spring, Double Coil, Galv, 5/8"	6	2217	6	2217
12	Wire, Tie, AL Annealed #4 SD	66	3012	60	1421
13	Bolt, Machine, 5/8" x 7", Galv, 12,400 lb Ultimate Tensile	6	2606	6	2606
ITEM NO	DESCRIPTION	S14(2) QTY	S14(2) S/N	S14(2) QTY	S14(2) S/N
14	Insulator, Pin, C Neck, White, Polymer	2	2656	2	2656
15	Pin, Angle, Crossarm	2	2658	2	2658
16	Washer, Square, Flat, 5/8", 2 1/4" x 2 1/4"	2	1412	2	1412
17	Washer, Lock, Spring, Double Coil, Galv, 5/8"	2	2217	2	2217
18	Wire, Tie, AL Annealed #4 SD	20	1421	20	1421
19	Bolt, Machine, 5/8" x 7", Galv, 12,400 lb Ultimate Tensile	2	2606	2	2606
ITEM NO	DESCRIPTION	Additional Materials QTY	Additional Materials S/N	Additional Materials QTY	Additional Materials S/N
20	Clips, Nylon, 1/4"	2	2996	2	2996
21	Screw, Self-tapping, #10 x 1", Hex Washer Head, TEK, Stainless Steel	2	2997	2	2997

Clark Public Utilities

CONSTRUCTION STANDARDS

3Ø DOUBLE 10' CROSSARM
HIGH NEUTRAL, 16° TO 30°
397 AAC MAX WIRE

REVISIONS

R	DATE	ENGR	OPS
1	12/4/17	CM	DK
2	2/11/25	CM	GM

PAGE: 2 of 2

C6B,C6BTREE

CAD FILE: C6B

APP: LB/AH
DATE: 10/18/07

SECTION 330

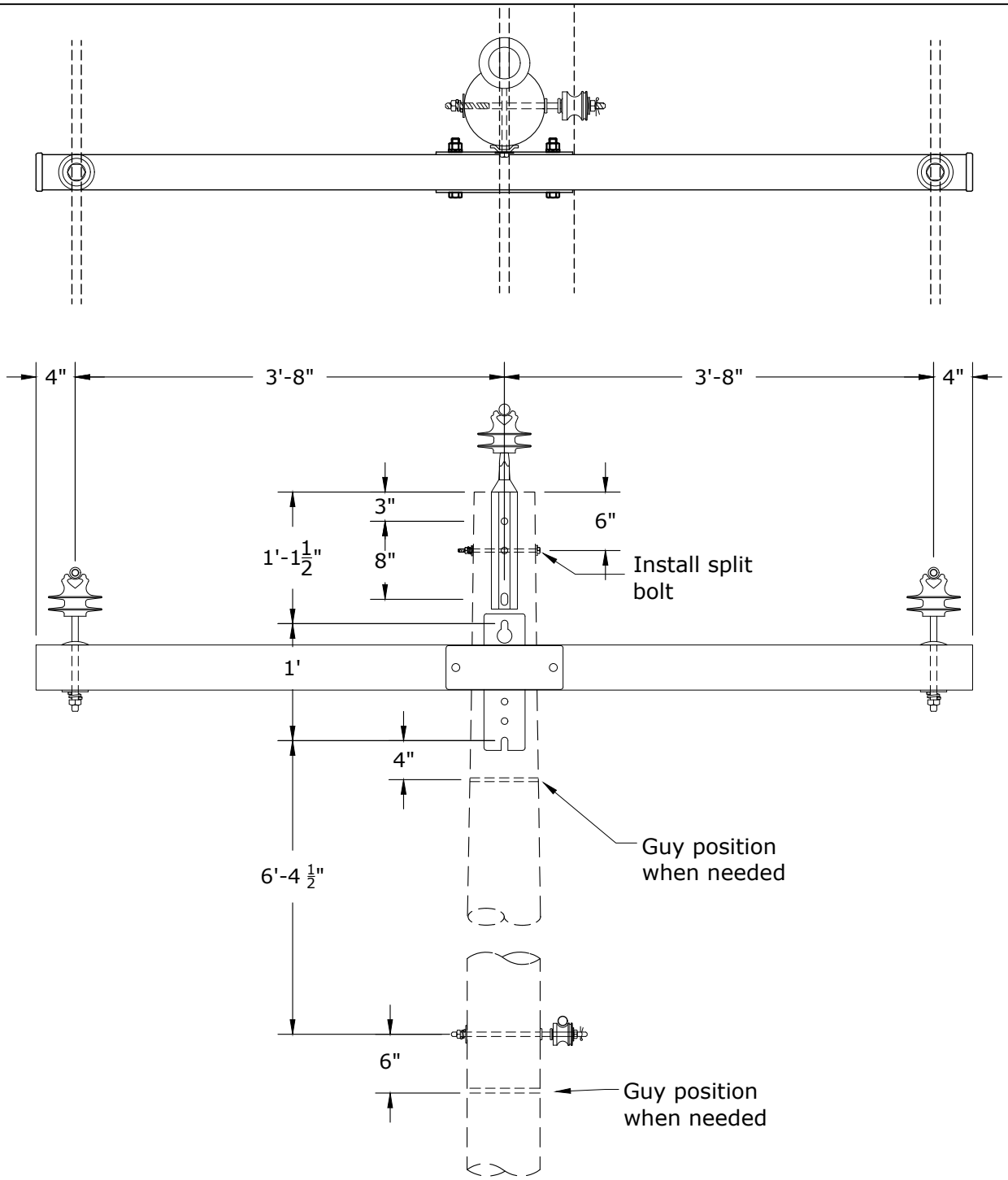

C7ATREE - Avian Safe

Notes:

1. Maximum line angle calculated for 3,000 lb MWT and 250-ft ruling span.
2. See Std AC - Avian Covers - Section 400 if needed. Covers only required on center phase.

Rev. 4 - Changed to fiberglass crossarm.

Clark Public Utilities

CONSTRUCTION STANDARDS

3Ø SINGLE 8' CROSSARM W/ POLE TOP
0° TO 5°
397 AAC MAX WIRE

REVISIONS

R	DATE	ENGR	OPS
1	3/02	REDRAWN	IN CAD
2	10/18/07	LB	AH
3	12/4/17	CM	DK
4	2/11/25	CM	GM

PAGE:		CAD FILE:	APP: ELM	SECTION
1 of 2	C7A,C7ATREE	C7A	DATE: 1/31/80	330

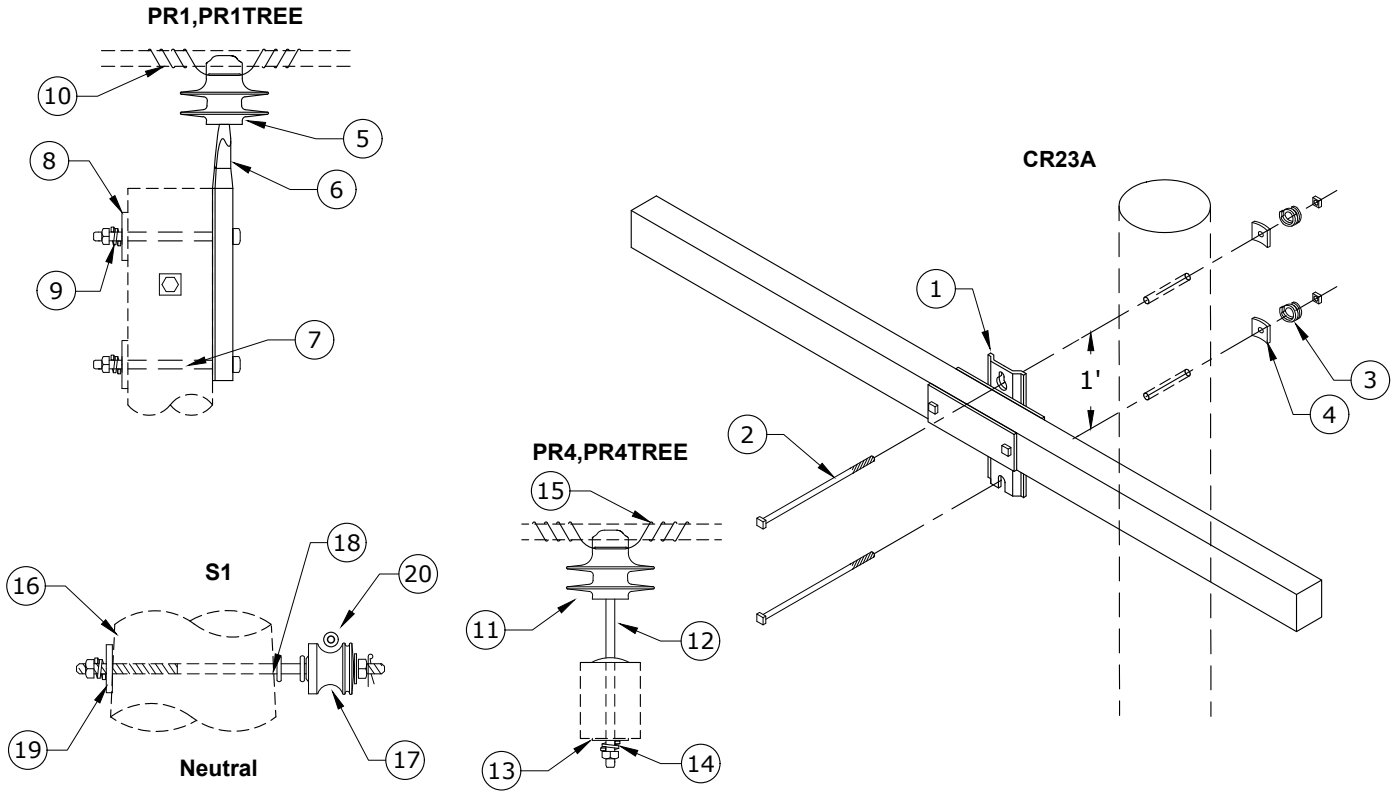

Rev. 4 - Changed to fiberglass crossarm.

ITEM NO	DESCRIPTION	C7ATREE		C7A	
		CR23A ✲		CR23A✲	
		QTY	S/N	QTY	S/N
1	Crossarm, Distribution, Fiberglass, 8' Long x 3-5/8" Wide x 4-5/8" High	1	3030	1	3030
2	Bolt, Machine, 5/8" x 14", Galv, 12,400 lb Ultimate Tensile	2	156	2	156
3	Washer, Lock, Spring, Double Coil, Galv, 5/8"	2	2217	2	2217
4	Washer, Curved, Square, Cast, 3" x 3" x 3/8" Thick x 13/16" Hole	2	1392	2	1392
ITEM NO	DESCRIPTION	PR1TREE		PR1	
		QTY	S/N	QTY	S/N
5	Insulator, Pin, C Neck, Polymer	1	1968	1	1968 ✲
6	Pin, Pole Top	1	962	1	962
7	Bolt, Machine, 5/8" x 12", Galv, 12,400 lb Ultimate Tensile	2	155	2	155
8	Washer, Curved, Square, Cast, 3" x 3" x 3/8" Thick x 13/16" Hole	2	1392	2	1392
9	Washer, Lock, Spring, Double Coil, Galv, 5/8"	2	2217	2	2217
10	Wire, Tie, AL Annealed #4 SD	11	3012	10	1421
ITEM NO	DESCRIPTION	PR4TREE(2)		PR4 (2)	
		QTY	S/N	QTY	S/N
11	Insulator, Pin, C Neck, Polymer	2	1968	2	1968
12	Pin, Crossarm	2	961	2	961
13	Washer, Square, Flat, 5/8", 2 1/4" x 2 1/4"	2	1412	2	1412
14	Washer, Lock, Spring, Double Coil, Galv, 5/8"	2	2217	2	2217
15	Wire, Tie, AL Annealed #4 SD	22✲	3012	20	1421
ITEM NO	DESCRIPTION	S1		S1	
		QTY	S/N	QTY	S/N
16	Washer, Curved, Square, Cast, 3" x 3" x 3/8" Thick x 13/16" Hole	1	1392	1	1392
17	Insulator, Spool Clevis, Small, ANSI 53-2 Class	1	773	1	773
18	Bolt, Double Upset, 5/8" x 14", Galv, 12,400 lb Ultimate Tensile	1	1580	1	1580
19	Washer, Lock, Spring, Double Coil, Galv, 5/8"	1	2217	1	2217
20	Wire, Tie, AL Annealed #4 SD	10	1421	10	1421

Clark Public Utilities

CONSTRUCTION STANDARDS

3Ø SINGLE 8' CROSSARM W/ POLE TOP
0° TO 5°
397 AAC MAX WIRE

REVISIONS

R	DATE	ENGR	OPS
1	3/02	REDRAWN	IN CAD
2	10/18/07	LB	AH
3	12/4/17	CM	DK
4	2/11/25	CM	GM

PAGE: 2 of 2

C7A,C7ATREE

CAD FILE: C7A

APP: ELM
DATE: 1/31/80

SECTION 330

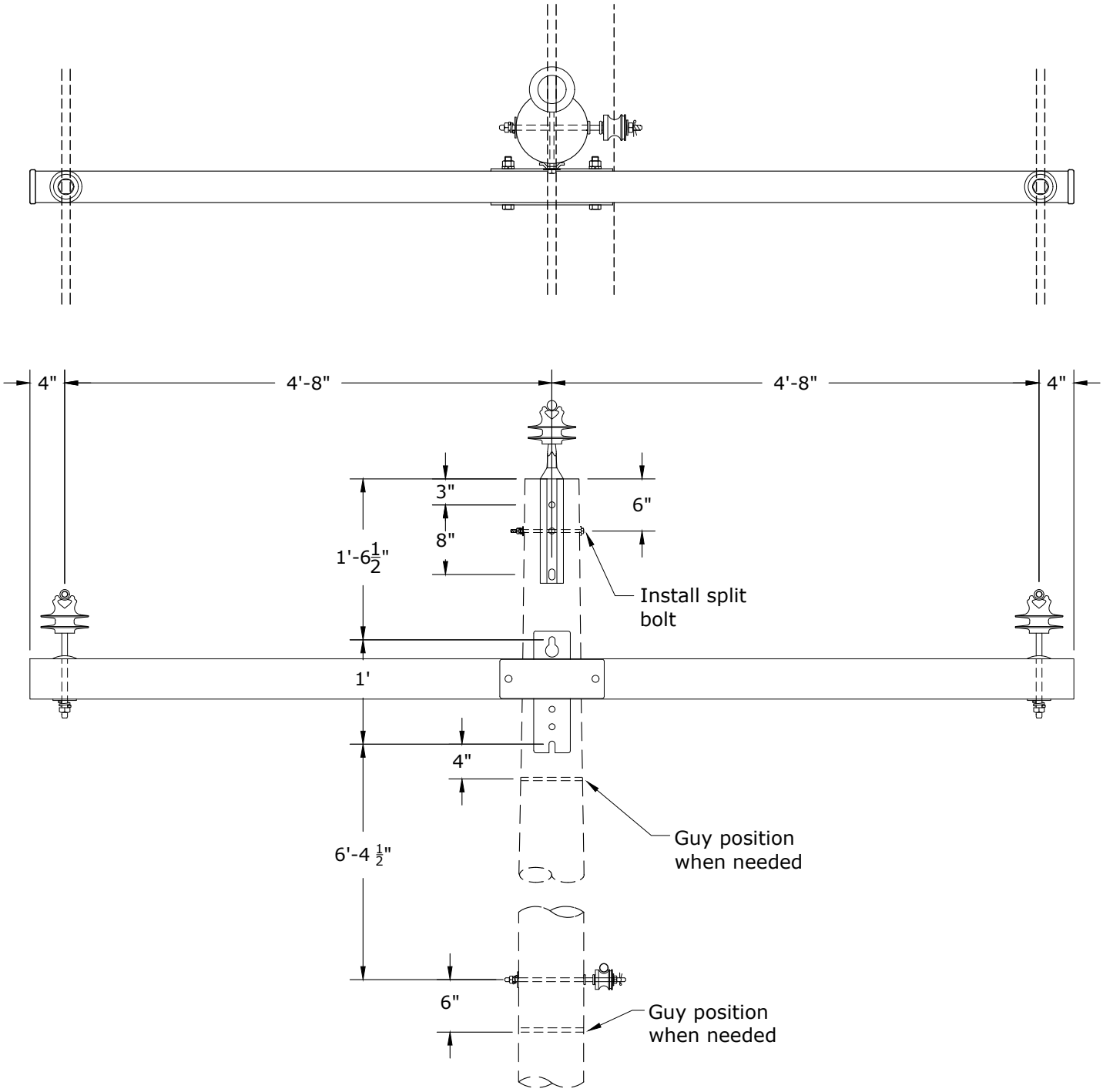

Avian Safe

Notes:

1. Maximum line angle calculated for 3,000 lb MWT and 250-ft ruling span.
2. Changing Std C7A to a 10' crossarm and lowering the crossarm 5" makes it avian safe.

Rev. 1 - Changed to fiberglass crossarm.

Clark Public Utilities

CONSTRUCTION STANDARDS

3Ø SINGLE 10' CROSSARM W/ POLE TOP
0° TO 5° - FOR AVIAN RETROFIT
397 AAC MAX WIRE

REVISIONS			
R	DATE	ENGR	OPS
1	2/11/25	CM	GM

PAGE: 1 of 2

C7AVIAN

CAD FILE: C7AVIAN

APP: CM/DK
DATE: 12/4/17

SECTION 330

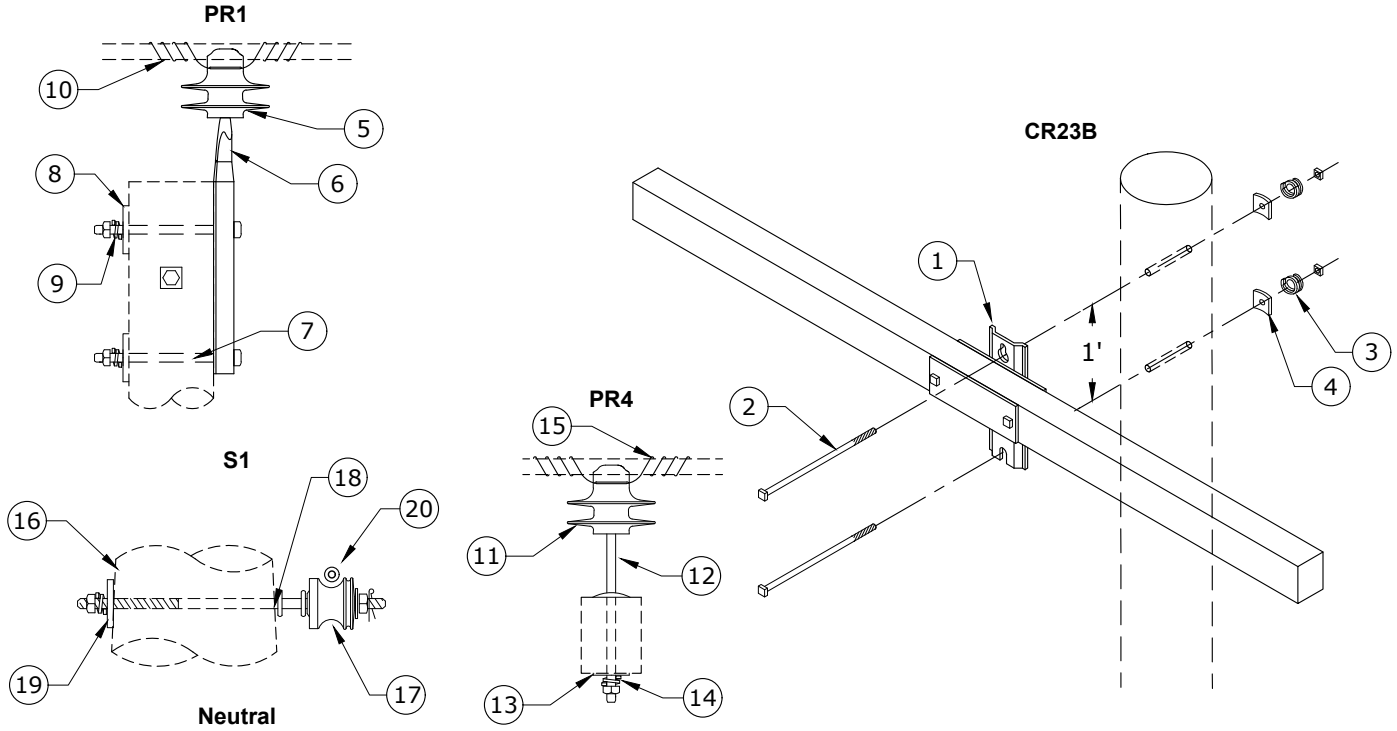

Rev. 1 - Changed to fiberglass crossarm.

ITEM NO	DESCRIPTION	C7Avian CR23B ✲ QTY	S/N
1	Crossarm, Distribution, Fiberglass, 10' Long x 3-5/8" Wide x 4-5/8" High	1	3031
2	Bolt, Machine, 5/8" x 14", Galv, 12,400 lb Ultimate Tensile	2	156
3	Washer, Lock, Spring, Double Coil, Galv, 5/8"	2	2217
4	Washer, Curved, Square, Cast, 3" x 3" x 3/8" Thick x 13/16" Hole	2	1392

ITEM NO	DESCRIPTION	PR1 QTY	S/N
5	Insulator, Pin, C Neck, Polymer	1	1968
6	Pin, Pole Top	1	962
7	Bolt, Machine, 5/8" x 12", Galv, 12,400 lb Ultimate Tensile	2	155
8	Washer, Curved, Square, Cast, 3" x 3" x 3/8" Thick x 13/16" Hole	2	1392
9	Washer, Lock, Spring, Double Coil, Galv, 5/8"	2	2217
10	Wire, Tie, AL Annealed #4 SD	10	1421

ITEM NO	DESCRIPTION	PR4 (2) QTY	S/N
11	Insulator, Pin, C Neck, Polymer	2	1968
12	Pin, Crossarm	2	961
13	Washer, Square, Flat, 5/8", 2 1/4" x 2 1/4"	2	1412
14	Washer, Lock, Spring, Double Coil, Galv, 5/8"	2	2217
15	Wire, Tie, AL Annealed #4 SD	20	1421

ITEM NO	DESCRIPTION	S1 QTY	S/N
16	Washer, Curved, Square, Cast, 3" x 3" x 3/8" Thick x 13/16" Hole	1	1392
17	Insulator, Spool Clevis, Small, ANSI 53-2 Class	1	773
18	Bolt, Double Upset, 5/8" x 14", Galv, 12,400 lb Ultimate Tensile	1	1580
19	Washer, Lock, Spring, Double Coil, Galv, 5/8"	1	2217
20	Wire, Tie, AL Annealed #4 SD	10	1421

Clark Public Utilities

CONSTRUCTION STANDARDS

3Ø SINGLE 10' CROSSARM W/ POLE TOP
0° TO 5° - FOR AVIAN RETROFIT
397 AAC MAX WIRE

REVISIONS

R	DATE	ENGR	OPS
1	2/11/25	CM	GM

PAGE: 2 of 2

C7AVIAN

CAD FILE: C7AVIAN

APP: CM/DK
DATE: 12/4/17

SECTION 330

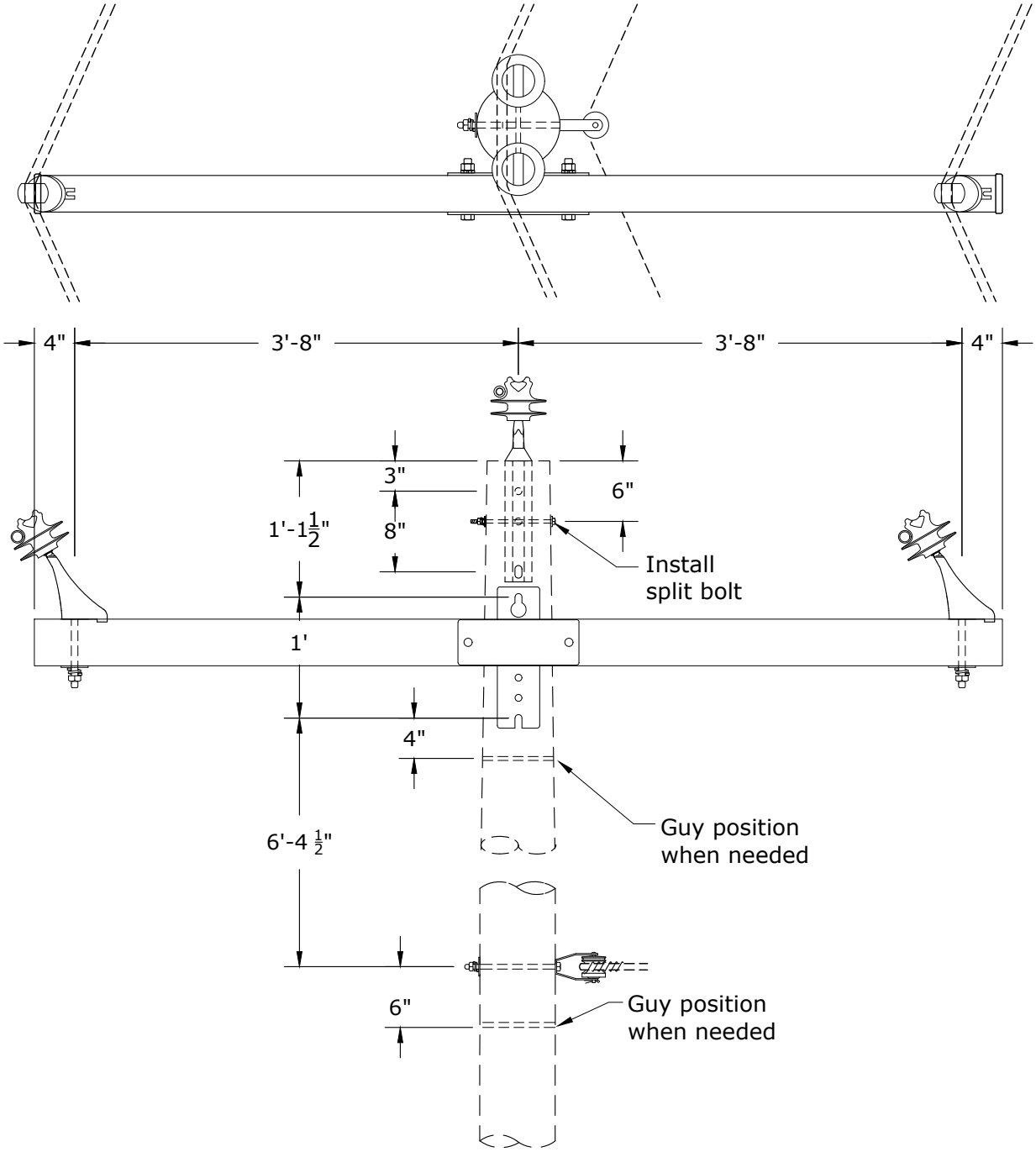

C8ATREE - Avian Safe

Notes:

1. Maximum line angle calculated for 3,000 lb MWT and 250-ft ruling span.
2. See Std AC - Avian Covers - Section 400 if needed. Covers only required on center phase.

Rev. 4 - Changed to single fiberglass crossarm with angle pin.

Clark Public Utilities

CONSTRUCTION STANDARDS

3Ø SINGLE 8' CROSSARM W/ POLE TOP
6° TO 15°
397 AAC MAX WIRE

REVISIONS

R	DATE	ENGR	OPS
1	3/02	REDRAWN	IN CAD
2	10/18/07	LB	AH
3	12/4/17	CM	DK
4	2/11/25	CM	GM

PAGE:		CAD FILE:	APP: ELM	SECTION
1 of 2	C8A,C8ATREE	C8A	DATE: 1/31/80	330

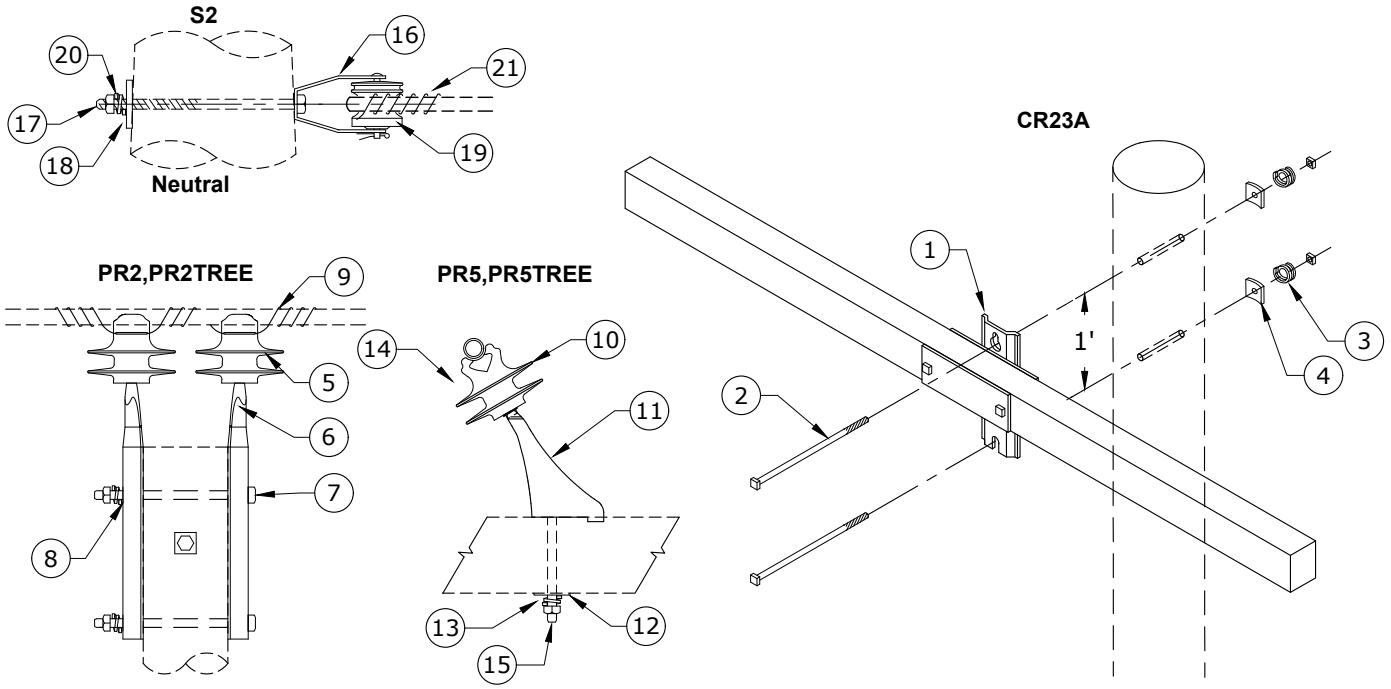

Rev. 4 - Changed to single fiberglass crossarm with angle pin.

ITEM NO	DESCRIPTION	C8ATREE CR23A ✲ QTY	C8ATREE CR23A ✲ S/N	C8A CR23A ✲ QTY	C8A CR23A ✲ S/N
1	Crossarm, Distribution, Fiberglass, 8' Long x 3-5/8" Wide x 4-5/8" High	1	3030	1	3030
2	Bolt, Machine, 5/8" x 14", Galv, 12,400 lb Ultimate Tensile	2	156	2	156
3	Washer, Lock, Spring, Double Coil, Galv, 5/8"	2	2217	2	2217
4	Washer, Curved, Square, Cast, 3" x 3" x 3/8" Thick x 13/16" Hole	2	1392	2	1392
ITEM NO	**DESCRIPTION**	**PR2TREE QTY**	**PR2TREE S/N**	**PR2 QTY**	**PR2 S/N**
5	Insulator, Pin, C Neck, Polymer	2	1968	2	1968 ✲
6	Pin, Pole Top	2	962	2	962
7	Bolt, Machine, 5/8" x 14", Galv, 12,400 lb Ultimate Tensile	2	156	2	156
8	Washer, Lock, Spring, Double Coil, Galv, 5/8"	2	2217	2	2217
9	Wire, Tie, AL Annealed #4 SD	22✲	3012	20	1421
ITEM NO	**DESCRIPTION**	**PR5TREE(2) QTY**	**PR5TREE(2) S/N**	**PR5 (2) QTY**	**PR5 (2) S/N**
10	Insulator, Pin, C Neck, Polymer	2	1968	2	1968
11	Pin, Angle, Crossarm	2	2658	2	2658
12	Washer, Square Flat, 5/8", 2 1/4" x 2 1/4"	2	1412	2	1412
13	Washer, Lock, Spring, Double Coil, Galv, 5/8"	2	2217	2	2217
14	Wire, Tie, AL Annealed #4 SD	22	3012	20	1421
15	Bolt, Machine, 5/8" x 7", Galv, 12,400 lb Ultimate Tensile	2	2606	2	2606
ITEM NO	**DESCRIPTION**	**S2 QTY**	**S2 S/N**	**S2 QTY**	**S2 S/N**
16	Clevis, D.E. Insulator 1340	1	335	1	335
17	Bolt, Machine, 5/8" x 14", Galv, 12,400 lb Ultimate Tensile	1	156	1	156
18	Washer, Curved, Square, Cast, 3" x 3" x 3/8" Thick x 13/16" Hole	1	1392	1	1392
19	Insulator, Spool Clevis, Small, ANSI 53-2 Class	1	773	1	773
20	Washer, Lock, Spring, Double Coil, Galv, 5/8"	1	2217	1	2217
21	Wire, Tie, AL Annealed #4 SD	10	1421	10	1421

Clark Public Utilities

CONSTRUCTION STANDARDS

3Ø SINGLE 8' CROSSARM W/ POLE TOP
6° TO 15°
397 AAC MAX WIRE

REVISIONS

R	DATE	ENGR	OPS
1	3/02	REDRAWN	IN CAD
2	10/18/07	LB	AH
3	12/4/17	CM	DK
4	2/11/25	CM	GM

PAGE: 2 of 2

C8A,C8ATREE

CAD FILE: C8A

APP: ELM
DATE: 1/31/80

SECTION 330

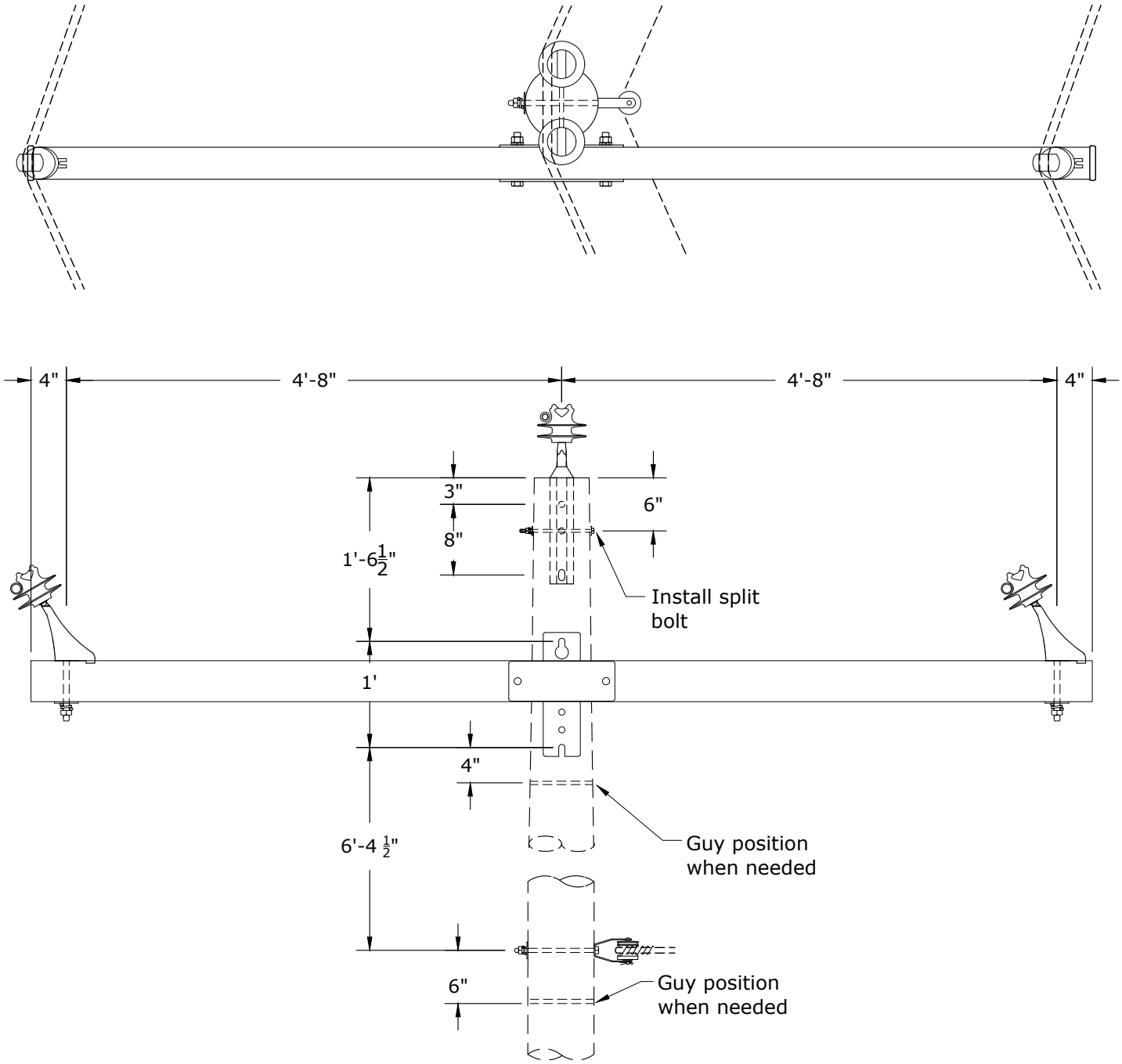

Avian Safe

Notes:

1. Maximum line angle calculated for 3,000 lb MWT and 250-ft ruling span.
2. Changing Std C8A to a 10' crossarm and lowering the crossarm 5" makes it avian safe.

Rev. 1 - Changed to single fiberglass crossarm with angle pin.

Clark Public Utilities

CONSTRUCTION STANDARDS

3Ø SINGLE 10' CROSSARM W/ POLE TOP
6° TO 15° - FOR AVIAN RETROFIT
397 AAC MAX WIRE

REVISIONS			
R	DATE	ENGR	OPS
1	2/11/25	CM	GM

PAGE: 1 of 2

C8AVIAN

CAD FILE: C8AVIAN

APP: CM/DK

DATE: 12/4/17

SECTION 330

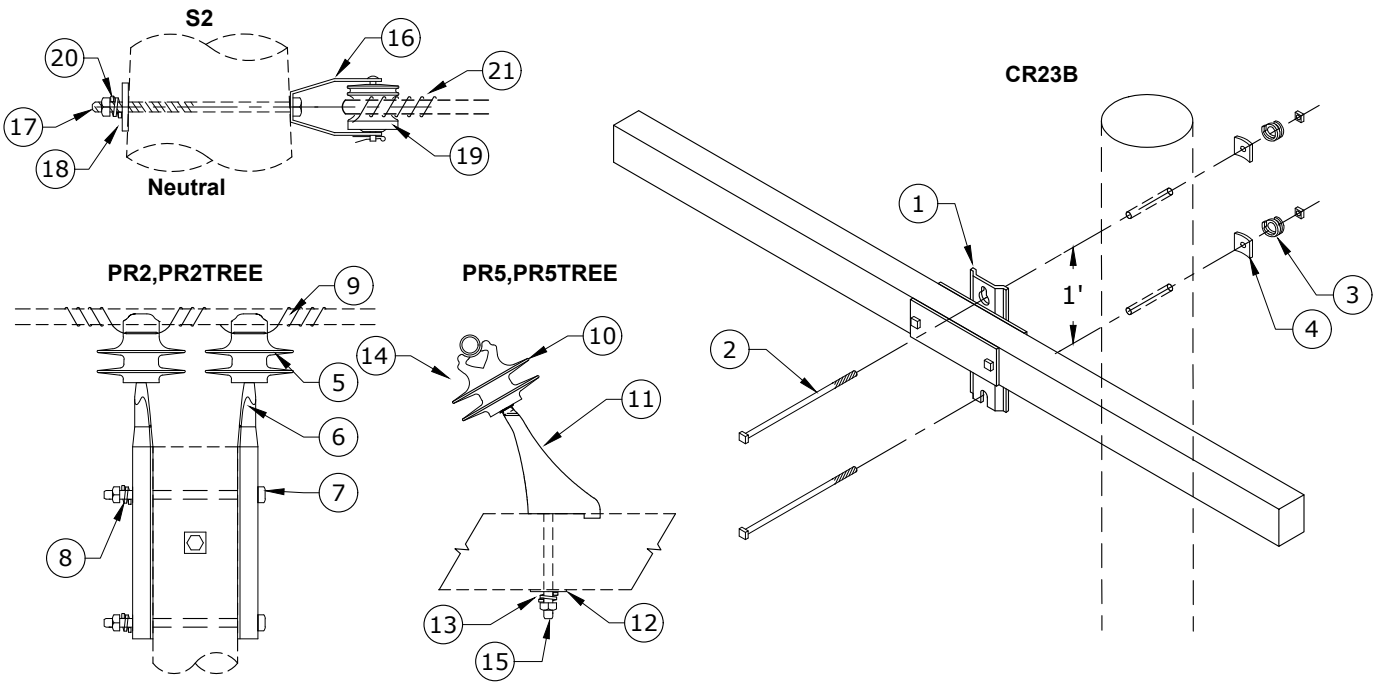

Rev. 1 - Changed to single fiberglass crossarm with angled pin.

ITEM NO	DESCRIPTION	C8Avian CR23B ✲ QTY	S/N
1	Crossarm, Distribution, Fiberglass, 10' Long x 3-5/8" Wide x 4-5/8" High	1	3031
2	Bolt, Machine, 5/8" x 14", Galv, 12,400 lb Ultimate Tensile	2	156
3	Washer, Lock, Spring, Double Coil, Galv, 5/8"	2	2217
4	Washer, Curved, Square, Cast, 3" x 3" x 3/8" Thick x 13/16" Hole	2	1392
ITEM NO	**DESCRIPTION**	**PR2 QTY**	**S/N**
5	Insulator, Pin, C Neck, Polymer	2	1968
6	Pin, Pole Top	2	962
7	Bolt, Machine, 5/8" x 14", Galv, 12,400 lb Ultimate Tensile	2	156
8	Washer, Lock, Spring, Double Coil, Galv, 5/8"	2	2217
9	Wire, Tie, AL Annealed #4 SD	20	1421
ITEM NO	**DESCRIPTION**	**PR5 (2) QTY**	**S/N**
10	Insulator, Pin, C Neck, Polymer	2	1968
11	Pin, Angle, Crossarm	2	2658
12	Washer, Square Flat, 5/8", 2 1/4" x 2 1/4"	2	1412
13	Washer, Lock, Spring, Double Coil, Galv, 5/8"	2	2217
14	Wire, Tie, AL Annealed #4 SD	20	1421
15	Bolt, Machine, 5/8" x 7", Galv, 12,400 lb Ultimate Tensile	2	2606
ITEM NO	**DESCRIPTION**	**S2 QTY**	**S/N**
16	Clevis, D.E. Insulator 1340	1	335
17	Bolt, Machine, 5/8" x 14", Galv, 12,400 lb Ultimate Tensile	1	156
18	Washer, Curved, Square, Cast, 3" x 3" x 3/8" Thick x 13/16" Hole	1	1392
19	Insulator, Spool Clevis, Small, ANSI 53-2 Class	1	773
20	Washer, Lock, Spring, Double Coil, Galv, 5/8"	1	2217
21	Wire, Tie, AL Annealed #4 SD	10	1421

Clark Public Utilities

CONSTRUCTION STANDARDS

3Ø SINGLE 10' CROSSARM W/ POLE TOP
6° TO 15° - FOR AVIAN RETROFIT
397 AAC MAX WIRE

REVISIONS

R	DATE	ENGR	OPS
1	2/11/25	CM	GM

PAGE: 2 of 2

C8AVIAN

CAD FILE: C8AVIAN

APP: CM/DK
DATE: 12/4/17

SECTION 330

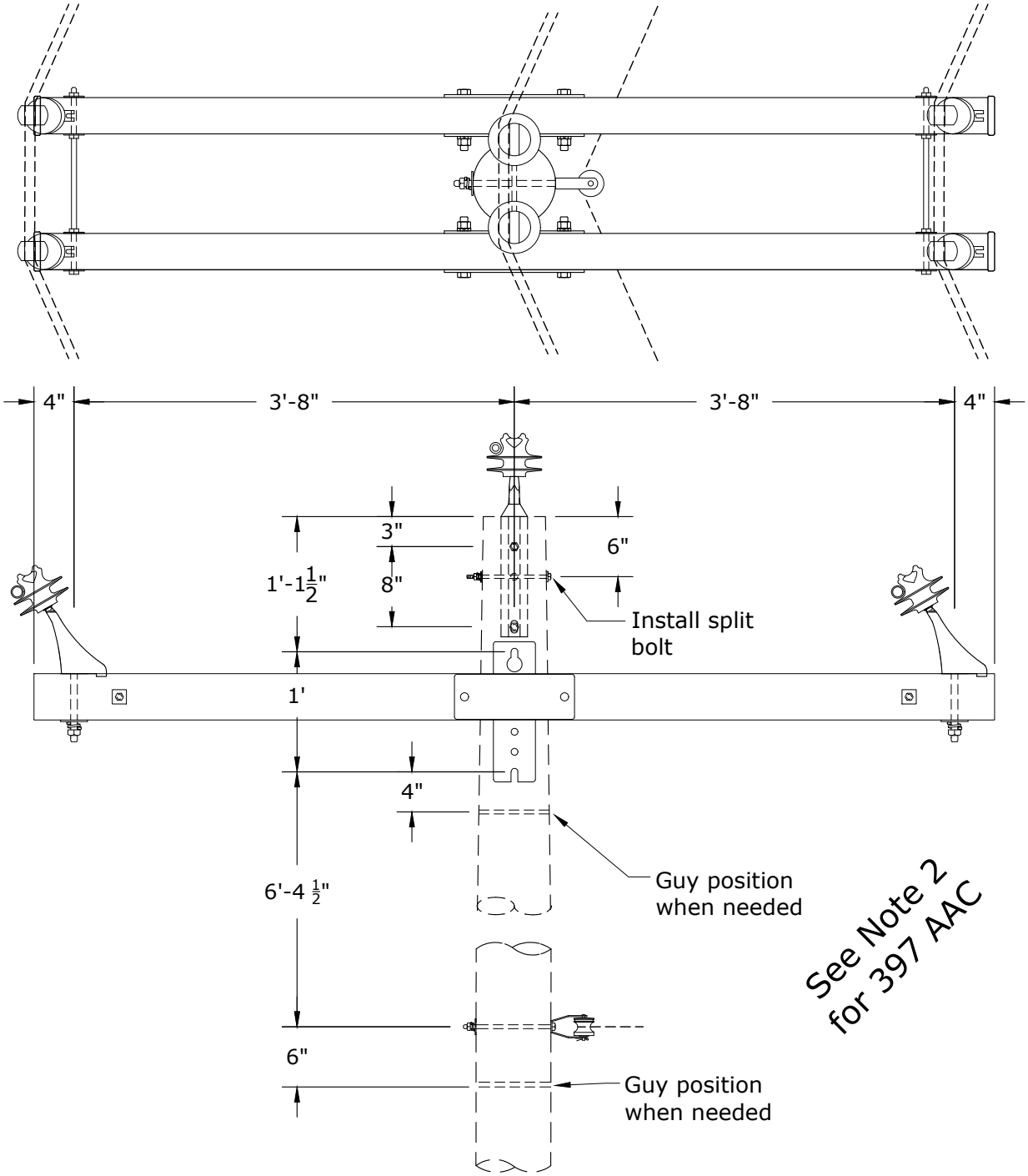

C9ATREE - Avian Safe

Notes:

1. Maximum line angle calculated for 2/0 at 2,000 lb MWT and 250-ft ruling span.
2. For 397 AAC at 16°-30° use Std C3B,C3BTREE.
3. See Std AC - Avian Covers - Section 400 if needed. Covers only required on center phase.

Rev. 2 - Changed to fiberglass crossarms.

Clark Public Utilities

CONSTRUCTION STANDARDS

3Ø DOUBLE 8' CROSSARM W/ DOUBLE POLE TOP - 16° TO 30° 397 AAC MAX WIRE

REVISIONS			
R	DATE	ENGR	OPS
1	12/4/17	CM	DK
2	2/11/25	CM	GM

PAGE:		CAD FILE:	APP: LB/AH	SECTION
1 of 2	C9A,C9ATREE	C9A	DATE: 10/18/07	330

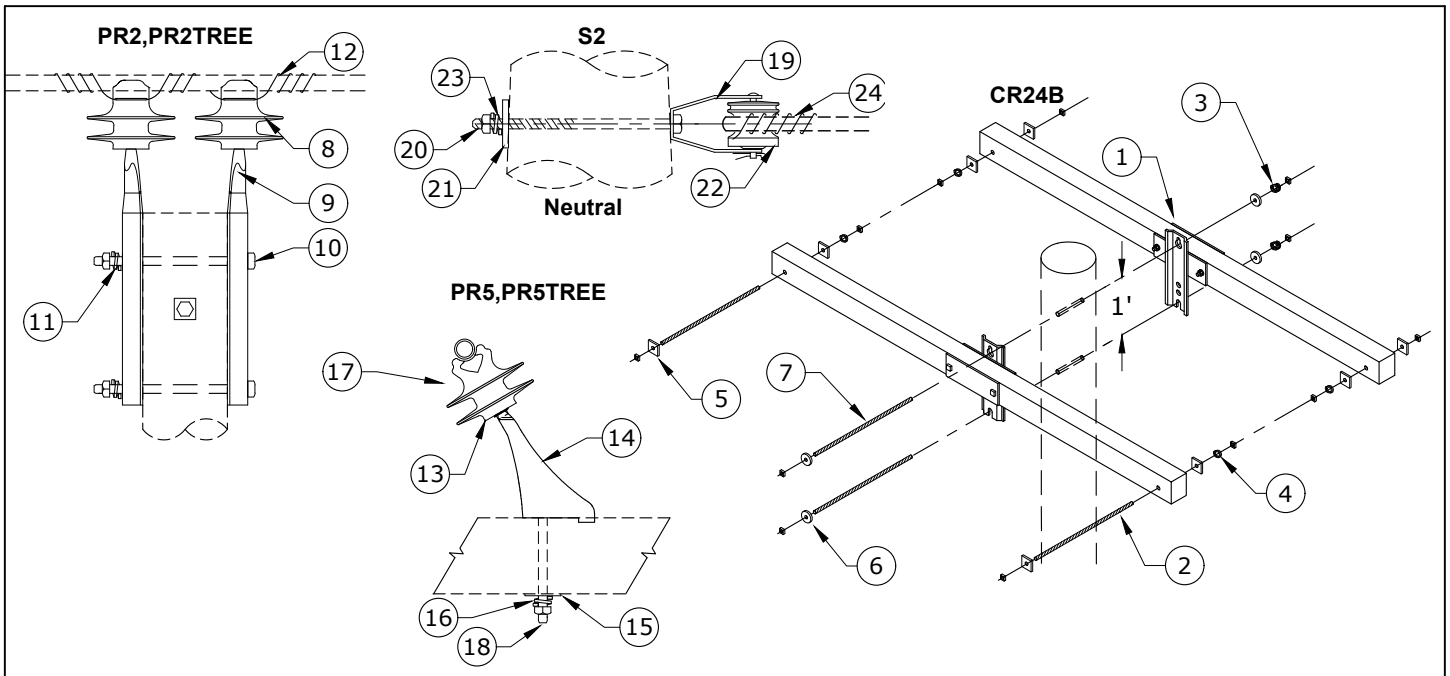

Rev. 2 - Changed to fiberglass crossarms.

ITEM NO	DESCRIPTION	C9ATREE CR24A ✲ QTY	C9ATREE CR24A ✲ S/N	C9A CR24A ✲ QTY	C9A CR24A ✲ S/N
1	Crossarm, Distribution, Fiberglass, 8' Long x 3-5/8" Wide x 4-5/8" High	2	3030	2	3030
2	Bolt, Double, Arm, 5/8" x 20", Galv, 12,400 lb Ultimate Tensile	2	83	2	83
3	Washer, Lock, Spring, Double Coil, Galv, 5/8"	2	2217	2	2217
4	Washer, Lock, Spring, Single Coil, Galv, 5/8"	4	1403	4	1403
5	Washer, Square, Flat 5/8", 2 1/4" x 2 1/4"	8	1412	8	1412
6	Washer, Round, Flat, Glav, 5/8"	4	1395	4	1395
7	Bolt, Double, Arm, 5/8" x 16", Galv, 12,400 lb Ultimate Tensile	2	81	2	81

ITEM NO	DESCRIPTION	PR2TREE QTY	PR2TREE S/N	PR2 QTY	PR2 S/N
8	Insulator, Pin, C Neck, Polymer	2	1968	2	1968
9	Pin, Pole Top	2	962	2	962
10	Bolt, Machine, 5/8" x 14", Galv, 12,400 lb Ultimate Tensile	2	156	2	156
11	Washer, Lock, Spring, Double Coil, Galv, 5/8"	2	2217	2	2217
12	Wire, Tie, AL Annealed #4 SD	22	3012	20	1421

ITEM NO	DESCRIPTION	PR5TREE(4) QTY	PR5TREE(4) S/N	PR5(4) QTY	PR5(4) S/N
13	Insulator, Pin, C Neck, Polymer	4	1968	4	1968
14	Pin, Angle, Crossarm	4	2658	4	2658
15	Washer, Square, Flat, 5/8", 2 1/4" x 2 1/4"	4	1412	4	1412
16	Washer, Lock, Spring, Double Coil, Galv, 5/8"	4	2217	4	2217
17	Wire, Tie, AL Annealed #4 SD	44	3012	40	1421
18	Bolt, Machine, 5/8" x 7", Galv, 12,400 lb Ultimate Tensile	4	2606	4	2606

ITEM NO	DESCRIPTION	S2 QTY	S2 S/N	S2 QTY	S2 S/N
19	Clevis, D.E. Insulator 1340	1	335	1	335
20	Bolt, Machine, 5/8" x 14", Galv, 12,400 lb Ultimate Tensile	1	156	1	156
21	Washer, Curved, Square, Cast, 3" x 3" x 3/8" Thick x 13/16" Hole	1	1392	1	1392
22	Insulator, Spool Clevis, Small, ANSI 53-2 Class	1	773	1	773
23	Washer, Lock, Spring, Double Coil, Galv, 5/8"	1	2217	1	2217
24	Wire, Tie, AL Annealed #4 SD	10	1421	10	1421

Clark Public Utilities

CONSTRUCTION STANDARDS

3Ø DOUBLE 8' CROSSARM W/ DOUBLE POLE TOP - 16° TO 30° 397 AAC MAX WIRE

REVISIONS

R	DATE	ENGR	OPS
1	12/4/17	CM	DK
2	2/11/25	CM	GM

PAGE: 2 of 2

C9A,C9ATREE

CAD FILE: C9A

APP: LB/AH

DATE: 10/18/07

SECTION 330

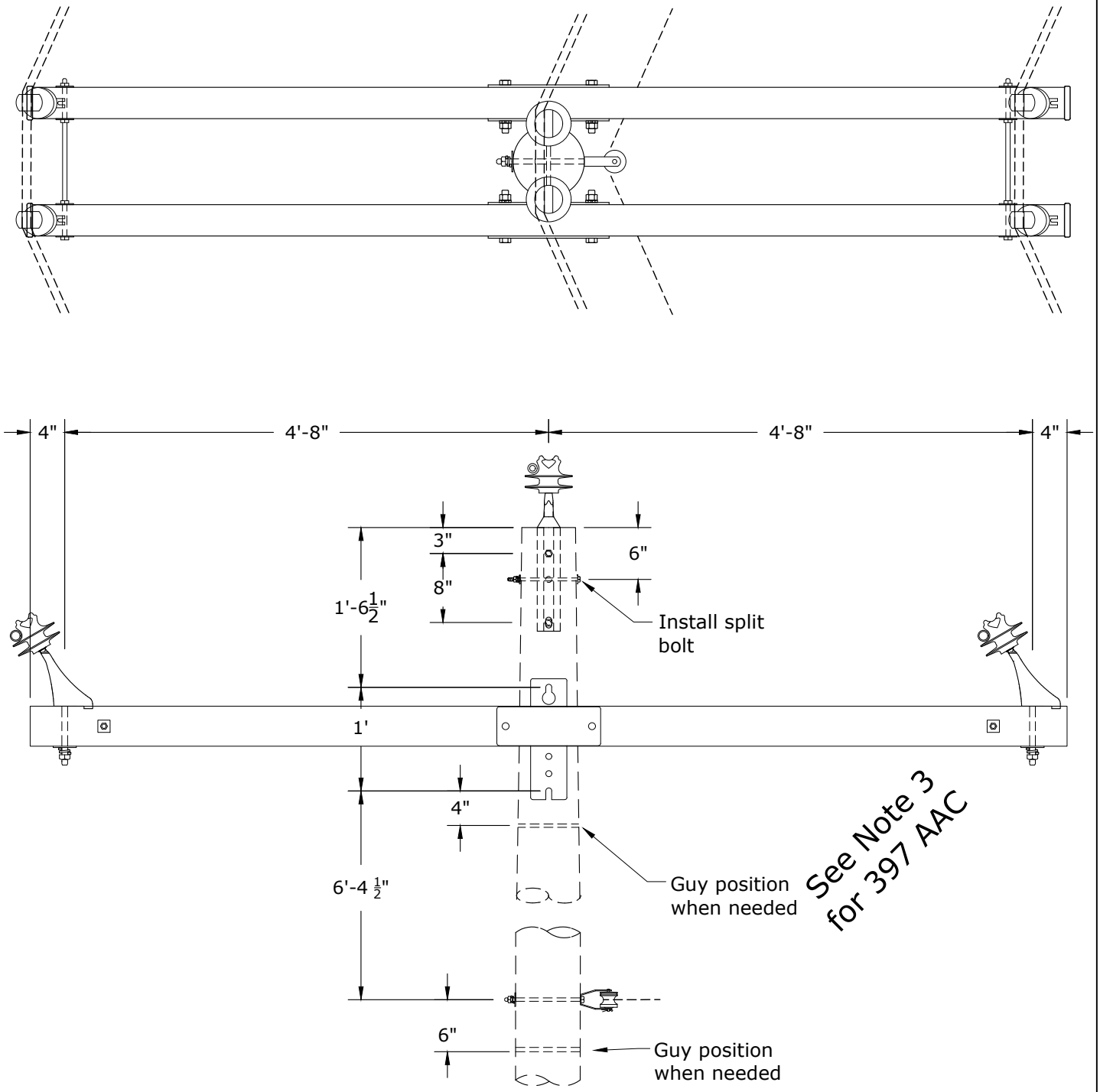

Avian Safe

Notes:

1. Maximum line angle calculated for 2,000 lb MWT and 250-ft ruling span.
2. Changing C9A to a 10' crossarm and lowering the crossarm 5" makes it avian safe.
3. This angle is too great for skypins with 397 AAC. Use buckarm with cover for 16°-30° in avian areas.

Rev. 1 - Changed to fiberglass crossarms.

Clark Public Utilities

CONSTRUCTION STANDARDS

3Ø DOUBLE 10' CROSSARM W/ DOUBLE POLE
TOP - 16° TO 30° - FOR AVIAN RETROFIT
397 AAC MAX WIRE

REVISIONS			
R	DATE	ENGR	OPS
1	2/11/25	CM	GM

PAGE:		CAD FILE:	APP: CM/DK	SECTION
1 of 2	C9AVIAN	C9AVIAN	DATE: 12/4/17	330

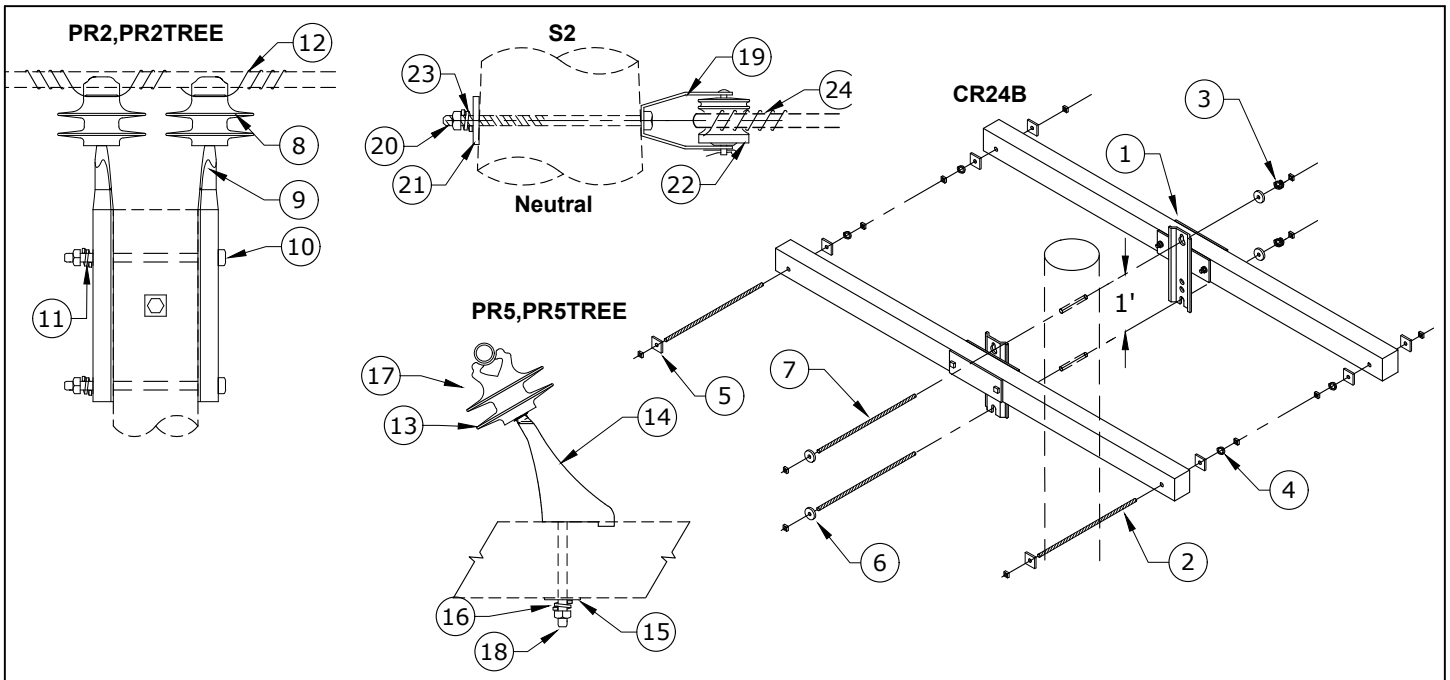

Rev. 1 - Changed to fiberglass crossarms.

ITEM NO	DESCRIPTION	C9Avian CR24B ✡ QTY	S/N
1	Crossarm, Distribution, Fiberglass, 10' Long x 3-5/8" Wide x 4-5/8" High	2	3031
2	Bolt, Double, Arm, 5/8" x 20", Galv, 12,400 lb Ultimate Tensile	2	83
3	Washer, Lock, Spring, Double Coil, Galv, 5/8"	2	2217
4	Washer, Lock, Spring, Single Coil, Galv, 5/8"	4	1403
5	Washer, Square, Flat 5/8", 2 1/4" x 2 1/4"	8	1412
6	Washer, Round, Flat, Glav, 5/8"	4	1395
7	Bolt, Double, Arm, 5/8" x 16", Galv, 12,400 lb Ultimate Tensile	2	81

ITEM NO	DESCRIPTION	PR2 QTY	S/N
8	Insulator, Pin, C Neck, Polymer	2	1968
9	Pin, Pole Top	2	962
10	Bolt, Machine, 5/8" x 14", Galv, 12,400 lb Ultimate Tensile	2	156
11	Washer, Lock, Spring, Double Coil, Galv, 5/8"	2	2217
12	Wire, Tie, AL Annealed #4 SD	20	1421

ITEM NO	DESCRIPTION	PR5(4) QTY	S/N
13	Insulator, Pin, C Neck, Polymer	4	1968
14	Pin, Angle, Crossarm	4	2658
15	Washer, Square, Flat, 5/8", 2 1/4" x 2 1/4"	4	1412
16	Washer, Lock, Spring, Double Coil, Galv, 5/8"	4	2217
17	Wire, Tie, AL Annealed #4 SD	40	1421
18	Bolt, Machine, 5/8" x 7", Galv, 12,400 lb Ultimate Tensile	4	2606

ITEM NO	DESCRIPTION	S2 QTY	S/N
19	Clevis, D.E. Insulator 1340	1	335
20	Bolt, Machine, 5/8" x 14", Galv, 12,400 lb Ultimate Tensile	1	156
21	Washer, Curved, Square, Cast, 3" x 3" x 3/8" Thick x 13/16" Hole	1	1392
22	Insulator, Spool Clevis, Small, ANSI 53-2 Class	1	773
23	Washer, Lock, Spring, Double Coil, Galv, 5/8"	1	2217
24	Wire, Tie, AL Annealed #4 SD	10	1421

Clark Public Utilities

CONSTRUCTION STANDARDS

3Ø DOUBLE 10' CROSSARM W/ DOUBLE TOP - 16° TO 30° - FOR AVIAN RETROFIT 397 AAC MAX WIRE

REVISIONS

R	DATE	ENGR	OPS
1	2/11/25	CM	GM

PAGE: 2 of 2

C9AVIAN

CAD FILE: C9AVIAN

APP: CM/DK

DATE: 12/4/17

SECTION 330

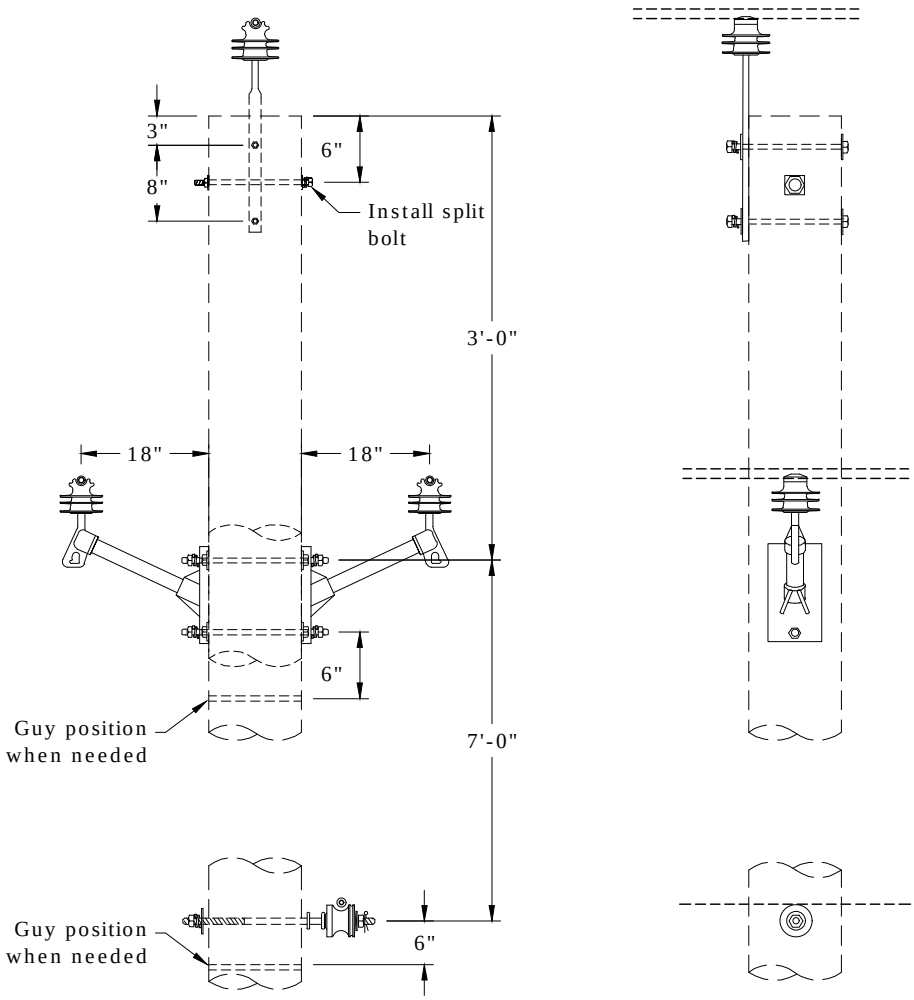

C10TREE - Avian Safe

Notes:

1. Maximum line angle calculated for 3,000 lbs. MWT and 250-ft ruling span.
2. See Std AC - Avian Covers - Section 400 if needed. Covers only required on center phase and one of the outside phases.

Rev. 3 - Eliminated porcelain pin insulators and added avian notes.

Clark Public Utilities

CONSTRUCTION STANDARDS

3Ø TWIGGY W/ POLE TOP
0° TO 5°
397 AAC MAX WIRE

REVISIONS

R	DATE	ENGR	OPS
1	3/02	REDRAWN	IN CAD
2	10/18/07	LB	AH
3	12/4/17	CM	DK

PAGE: 1 of 2

C10,C10TREE

CAD FILE: C10

APP: ELM
DATE: 1/31/80

SECTION 330

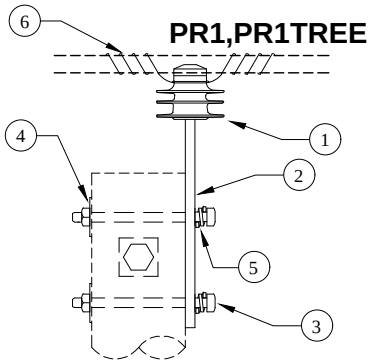

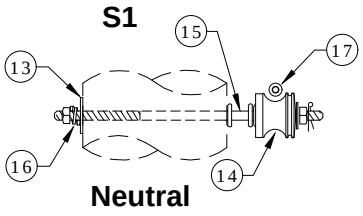

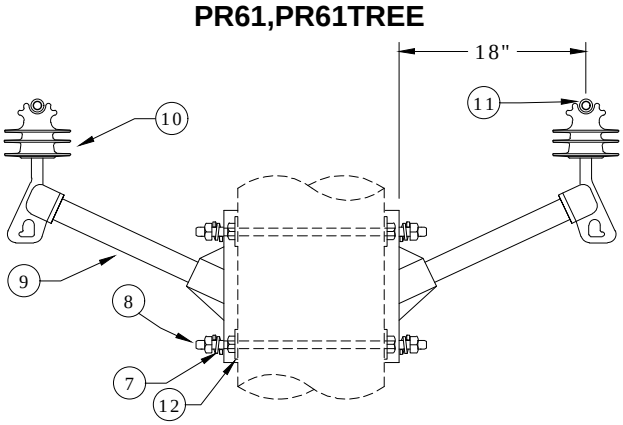

Rev. 3 - Eliminated porcelain pin insulators and added avian notes.

ITEM NO.	DESCRIPTION	C10TREE PR1TREE QTY.	C10TREE PR1TREE S/N	C10 PR1 QTY.	C10 PR1 S/N
1	Insulator, Pin, C Neck, Polymer	1	1968	1	1968 ✲
2	Pin, Pole Top	1	962	1	962
3	Bolt, Machine, 5/8" x 12", Galv., 12,400 lbs Ultimate Tensile	2	155	2	155
4	Washer, Curved, Square, Cast, 3" x 3" x 3/8" Thick x 13/16" Hole	2	1392	2	1392
5	Washer, Lock, Spring, Double Coil, Galv., 5/8"	2	2217	2	2217
6	Wire, Tie, AL Annealed #4 SD	11✲	3012	10	1421
ITEM NO.	**DESCRIPTION**	**PR61TREE QTY.**	**PR61TREE S/N**	**PR61 QTY.**	**PR61 S/N**
7	Washer, Lock, Spring, Double Coil, Galv., 5/8"	4✲	2217	4✲	2217
8	Bolt, Double Arm, 5/8" x 18", Galv., 12,400 lbs Ultimate Tensile	2✲	82✲	2✲	82✲
9	Arm, Epoxy 18" 2500 lbs	2	2504	2	2504
10	Insulator, Pin, C Neck, Polymer	2	1968	2	1968 ✲
11	Wire, Tie, AL Annealed #4 SD	22✲	3012	20	1421
12	Washer, Flat Round Galv., 5/8"	4 ✲	1395	4✲	1395
ITEM NO.	**DESCRIPTION**	**S1 QTY.**	**S1 S/N**	**S1 QTY.**	**S1 S/N**
13	Washer, Curved, Square, Cast, 3" x 3" x 3/8" Thick x 13/16" Hole	1	1392	1	1392
14	Insulator, Spool Clevis, Small, ANSI 53-2 Class	1	773	1	773
15	Bolt, Double Upset, 5/8" x 14", Galv., 12,400 lbs Ultimate Tensile	1	1580	1	1580
16	Washer, Lock, Spring, Double Coil, Galv., 5/8"	1	2217	1	2217
17	Wire, Tie, AL Annealed #4 SD	10	1421	10	1421

Clark Public Utilities

CONSTRUCTION STANDARDS

3Ø TWIGGY W/ POLE TOP
0° TO 5°
397 AAC MAX WIRE

REVISIONS

R	DATE	ENGR	OPS
1	3/02	REDRAWN	IN CAD
2	10/18/07	LB	AH
3	12/4/17	CM	DK

PAGE: 2 of 2

C10,C10TREE

CAD FILE: C10

APP: ELM
DATE: 1/31/80

SECTION 330

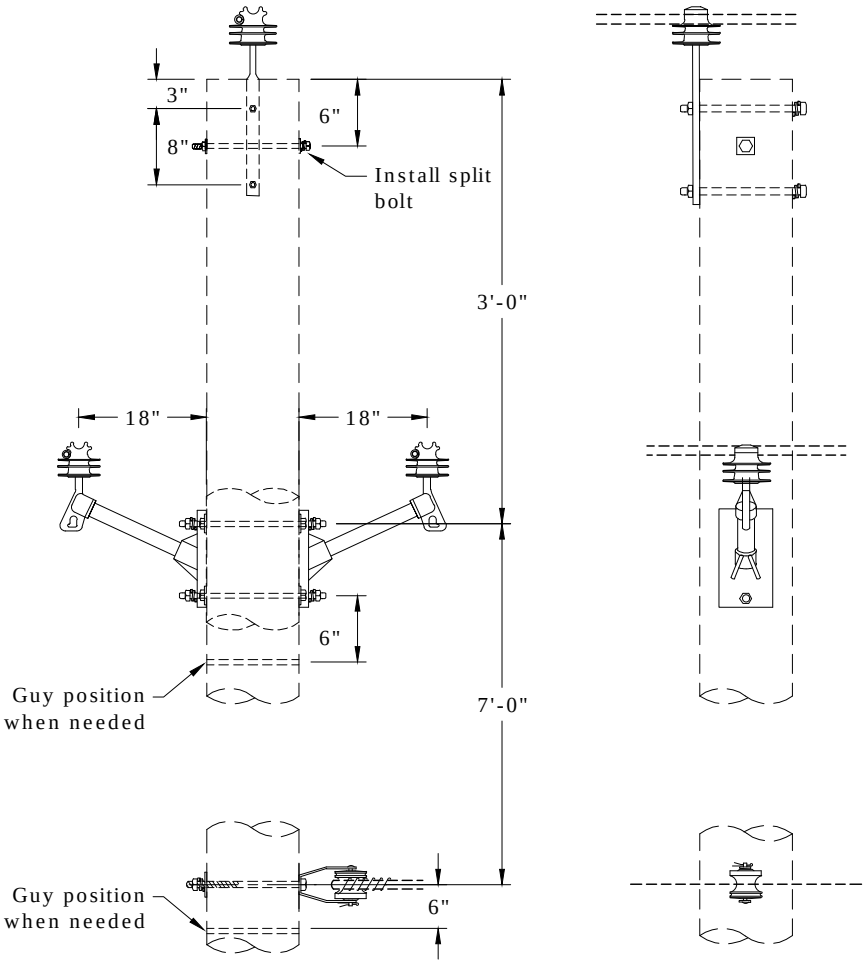

C11TREE - Avian Safe

Notes:

1. Maximum line angle calculated for 3,000 lbs. MWT and 250-ft ruling span.
2. See Std AC - Avian Covers - Section 400 if needed. Covers only required on center phase and one of the outside phases.

Rev. 1 - Eliminated porcelain pin insulators and added avian notes.

Clark Public Utilities

CONSTRUCTION STANDARDS

3Ø TWIGGY W/ POLE TOP
6° TO 15°
397 AAC MAX WIRE

REVISIONS

R	DATE	ENGR	OPS
1	12/4/17	CM	DK

PAGE: 1 of 2

C11,C11TREE

CAD FILE: C11

APP: LB/AH
DATE: 10/18/07

SECTION 330

PR1,PR1TREE

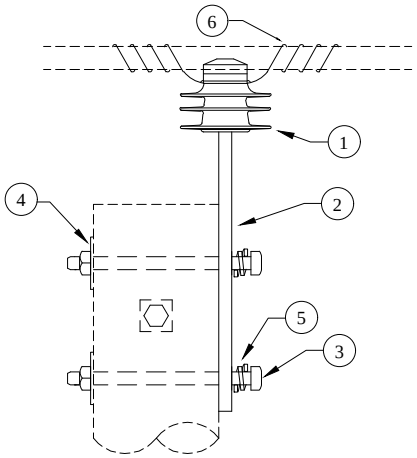

PR61,PR61TREE

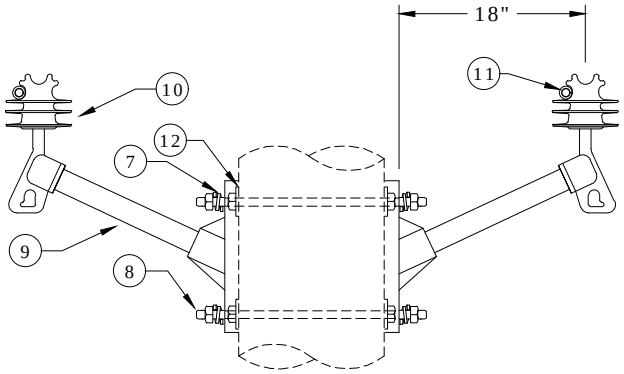

S2

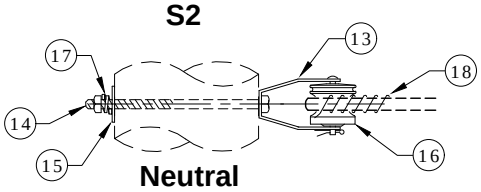

Rev. 1 - Eliminated porcelain pin insulators and added avian notes.

ITEM NO.	DESCRIPTION	C11TREE PR1TREE QTY.	C11TREE PR1TREE S/N	C11 PR1 QTY.	C11 PR1 S/N
1	Insulator, Pin, C Neck, Polymer	1	1968	1	1968 ✲
2	Pin, Pole Top	1	962	1	962
3	Bolt, Machine, 5/8" x 12", Galv., 12,400 lbs Ultimate Tensile	2	155 ✲	2	155✲
4	Washer, Curved, Square, Cast, 3" x 3" x 3/8" Thick x 13/16" Hole	2	1392 ✲	2	1392 ✲
5	Washer, Lock, Spring, Double Coil, Galv., 5/8"	2	2217	2	2217
6	Wire, Tie, AL Annealed #4 SD	11✲	3012	10	1421

ITEM NO.	DESCRIPTION	PR61TREE QTY.	PR61TREE S/N	PR61 QTY.	PR61 S/N
7	Washer, Lock, Spring, Double Coil, Galv., 5/8"	4✲	2217	4✲	2217
8	Bolt, Double Arm, 5/8" x 18", Galv., 12,400 lbs Ultimate Tensile	2✲	82✲	2✲	82✲
9	Arm, Epoxy 18" 2500 lbs	2	2504	2	2504
10	Insulator, Pin, C Neck, Polymer	2	1968	2	1968 ✲
11	Wire, Tie, AL Annealed #4 SD	22✲	3012	20	1421
12	Washer, Flat Round Galv., 5/8"	4 ✲	1395	4✲	1395

ITEM NO.	DESCRIPTION	S2 QTY.	S2 S/N	S2 QTY.	S2 S/N
13	Clevis, D.E. Insulator 1340	1	335	1	335
14	Bolt, Machine, 5/8" x 14", Galv., 12,400 lbs Ultimate Tensile	1	156	1	156
15	Washer, Curved, Square, Cast, 3" x 3" x 3/8" Thick x 13/16" Hole	1	1392	1	1392
16	Insulator, Spool Clevis, Small, ANSI 53-2 Class	1	773	1	773
17	Washer, Lock, Spring, Double Coil, Galv., 5/8"	1	2217	1	2217
18	Wire, Tie, AL Annealed #4 SD	10	1421	10	1421

Clark Public Utilities

CONSTRUCTION STANDARDS

3Ø TWIGGY W/ POLE TOP
6° TO 15°
397 AAC MAX WIRE

REVISIONS

R	DATE	ENGR	OPS
1	12/4/17	CM	DK

PAGE: 2 of 2

C11,C11TREE

CAD FILE: C11

APP: LB/AH
DATE: 10/18/07

SECTION 330

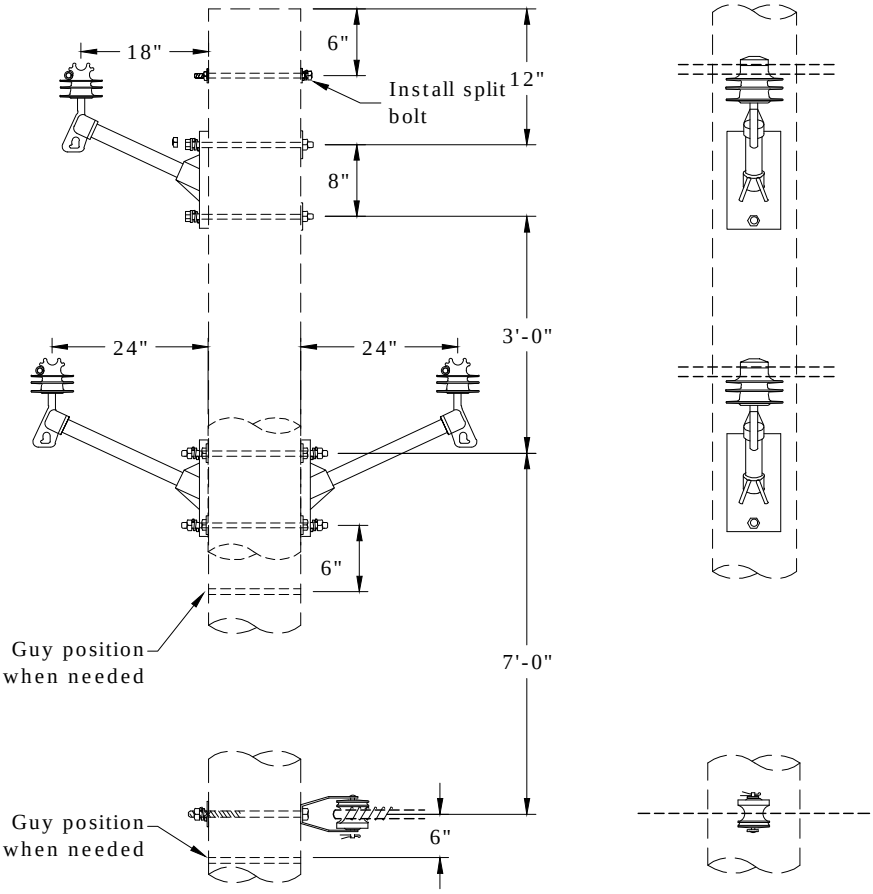

C12TREE - Avian Safe

Notes:

1. Maximum line angle calculated for 3,000 lbs. MWT and 250-ft ruling span.
2. See Std AC - Avian Covers - Section 400 if needed. Covers only required on top phase and one of the bottom phases.

Rev. 1 - Eliminated porcelain pin insulators, added avian notes, and changed double pole top to twiggy for angle.

Clark Public Utilities

CONSTRUCTION STANDARDS

3Ø TWIGGY
16° TO 30°
397 AAC MAX WIRE

REVISIONS

R	DATE	ENGR	OPS
1	12/4/17	CM	DK

PAGE: 1 of 2

C12,C12TREE

CAD FILE: C12

APP: LB/AH
DATE: 10/18/07

SECTION 330

PR60,PR60TREE

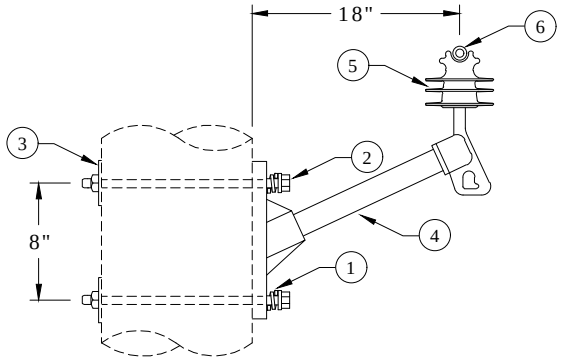

PR63,PR63TREE

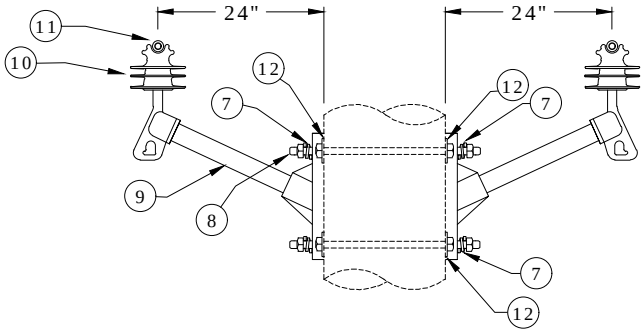

S2

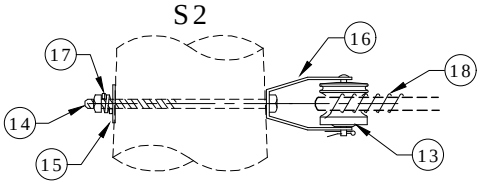

Neutral

Rev. 1 - Eliminated porcelain pin insulators, added avian notes, and changed double pole top to twiggy for angle.

ITEM NO.	DESCRIPTION	C12TREE PR60TREE QTY.	C12TREE PR60TREE S/N	C12 PR60 QTY.	C12 PR60 S/N
1	Washer, Lock, Spring, Double Coil, Galv., 5/8"	2	2217	2	2217
2	Bolt, Machine, 5/8" x 16", Galv., 12,400 lbs Ultimate Tensile	2	157	2	157
3	Washer, Curved, Square, Cast, 3" x 3" x 3/8" Thick x 13/16" Hole	2	1392	2	1392
4	Arm, Epoxy 18" 2500 lbs	1	2504	1	2504
5	Insulator, Pin C Neck, Polymer	1	1968	1	1968 ✲
6	Wire, Tie, AL Annealed #4 SD	11✲	3012	10	1421
ITEM NO.	**DESCRIPTION**	**PR63TREE QTY.**	**PR63TREE S/N**	**PR63 QTY.**	**PR63 S/N**
7	Washer, Lock, Spring, Double Coil, Galv., 5/8"	4 ✲	2217	4 ✲	2217
8	Bolt, Double Arm, 5/8" x 18", Galv., 12,400 lbs Ultimate Tensile	2 ✲	82 ✲	2 ✲	82 ✲
9	Arm, Epoxy 24" 2500 lbs	2	2605	2	2605
10	Insulator, Pin, C Neck, Polymer	2	1968	2	1968 ✲
11	Wire, Tie, AL Annealed #4 SD	22 ✲	3012	20	1421
12	Washer, Flat Round Galv., 5/8"	4 ✲	1395	4 ✲	1395
ITEM NO.	**DESCRIPTION**	**S2 QTY.**	**S2 S/N**	**S2 QTY.**	**S2 S/N**
13	Clevis, D.E. Insulator 1340	1	335	1	335
14	Bolt, Machine, 5/8" x 14", Galv., 12,400 lbs Ultimate Tensile	1	156	1	156
15	Washer, Curved, Square, Cast, 3" x 3" x 3/8" Thick x 13/16" Hole	1	1392	1	1392
16	Insulator, Spool Clevis, Small, ANSI 53-2 Class	1	773	1	773
17	Washer, Lock, Spring, Double Coil, Galv., 5/8"	1	2217	1	2217
18	Wire, Tie, AL Annealed #4 SD	10	1421	10	1421

Clark Public Utilities

CONSTRUCTION STANDARDS

3Ø TWIGGY
16° TO 30°
397 AAC MAX WIRE

REVISIONS

R	DATE	ENGR	OPS
1	12/4/17	CM	DK

PAGE: 2 of 2

C12,C12TREE

CAD FILE: C12

APP: LB/AH
DATE: 10/18/07

SECTION 330

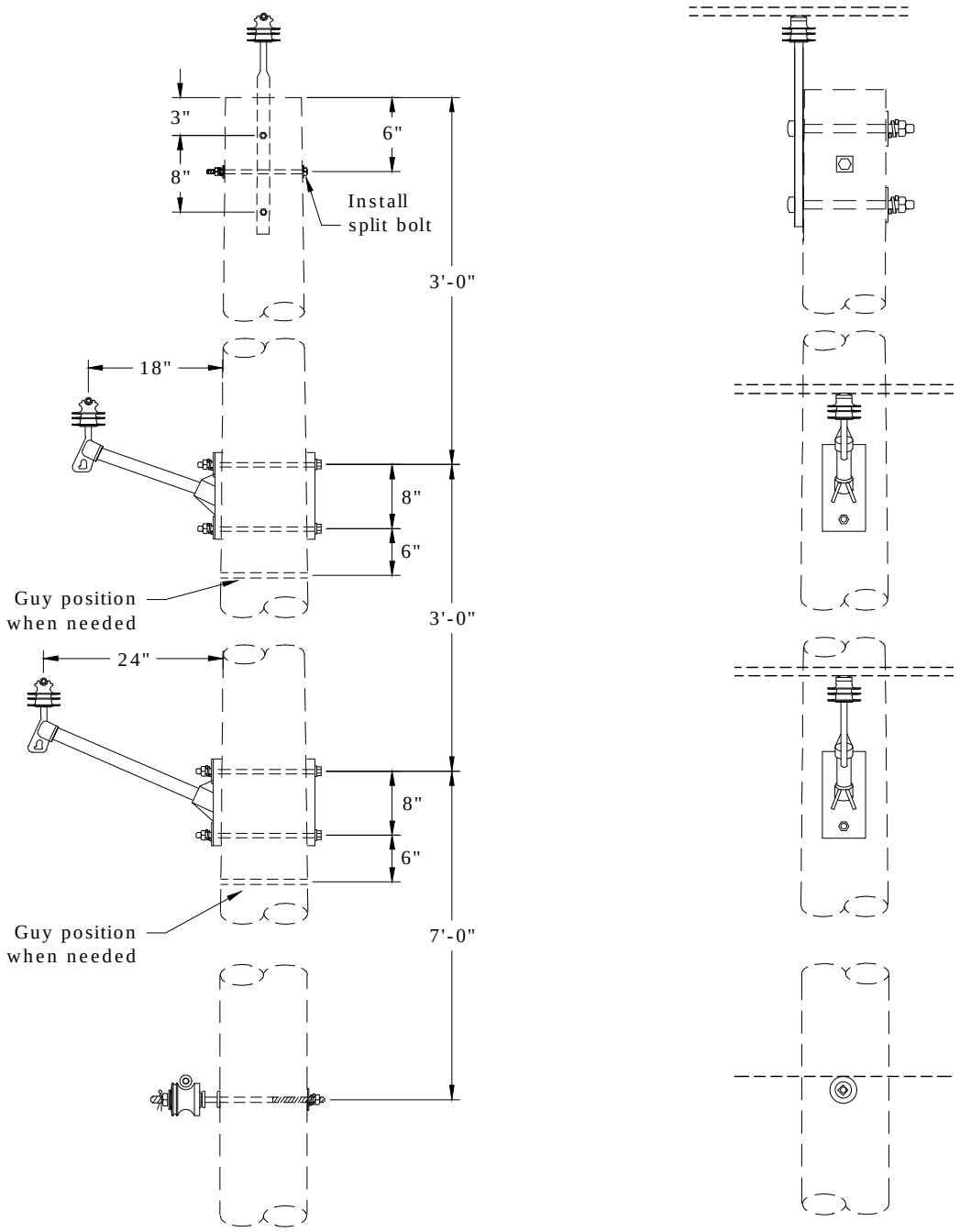

C13TREE - Avian Safe

Notes:

1. Maximum line angle calculated for 3,000 lbs. MWT and 250-ft ruling span.
2. See Std AC - Avian Covers - Section 400 if needed. Covers only required on center phase.

Rev. 1 - Eliminated porcelain pin insulators and added avian notes.

Clark Public Utilities

CONSTRUCTION STANDARDS

3Ø VERTICAL W/ POLE TOP
0° TO 5°
397 AAC MAX WIRE

REVISIONS

R	DATE	ENGR	OPS
1	12/4/17	CM	DK

PAGE: 1 of 2

C13,C13TREE

CAD FILE: C13

APP: LB/AH
DATE: 9/06

SECTION 330

PR1,PR1TREE

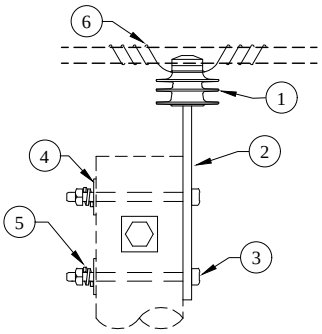

PR60,PR60TREE

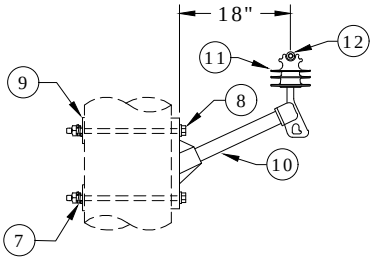

PR62,PR62TREE

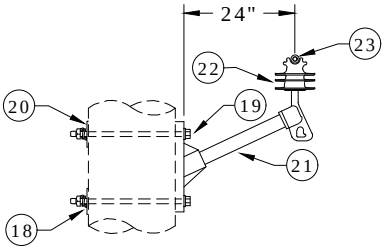

S1

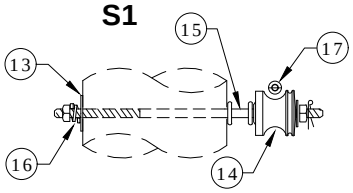

Neutral

Rev. 1 - Eliminated porcelain pin insulators and added avian notes.

ITEM NO.	DESCRIPTION	C13TREE PR1TREE ✲ QTY.	C13TREE PR1TREE ✲ S/N	C13 PR1 QTY.	C13 PR1 S/N
1	Insulator, Pin, C Neck, Polymer	1	1968	1	1968✲
2	Pin, Pole Top	1	962	1	962
3	Bolt, Machine, 5/8" x 12", Galv., 12,400 lbs Ultimate Tensile	2	155	2	155
4	Washer, Curved, Square, Cast, 3" x 3" x 3/8" Thick x 13/16" Hole	2	1392	2	1392
5	Washer, Lock, Spring, Double Coil, Galv., 5/8"	2	2217	2	2217
6	Wire, Tie, AL Annealed #4 SD	11✲	3012	10	1421

ITEM NO.	DESCRIPTION	PR60TREE QTY.	PR60TREE S/N	PR60 QTY.	PR60 S/N
7	Washer, Lock, Spring, Double Coil, Galv., 5/8"	2	2217	2	2217
8	Bolt, Machine, 5/8" x 16", Galv., 12,400 lbs Ultimate Tensile	2	157	2	157
9	Washer, Curved, Square, Cast, 3" x 3" x 3/8" Thick x 13/16" Hole	2	1392	2	1392
10	Arm, Epoxy 18" 2500 lbs	1	2504	1	2504
11	Insulator, Pin, C Neck, Polymer	1	1968	1	1968✲
12	Wire, Tie, AL Annealed #4 SD	11✲	3012	10	1421

ITEM NO.	DESCRIPTION	S1 QTY.	S1 S/N	S1 QTY.	S1 S/N
13	Washer, Curved, Square, Cast, 3" x 3" x 3/8" Thick x 13/16" Hole	1	1392	1	1392
14	Insulator, Spool Clevis, Small, ANSI 53-2 Class	1	773	1	773
15	Bolt, Double Upset, 5/8" x 14", Galv., 12,400 lbs Ultimate Tensile	1	1580	1	1580
16	Washer, Lock, Spring, Double Coil, Galv., 5/8"	1	2217	1	2217
17	Wire, Tie, AL Annealed #4 SD	10	1421	10	1421

ITEM NO.	DESCRIPTION	PR62TREE QTY.	PR62TREE S/N	PR62 QTY.	PR62 S/N
18	Washer, Lock, Spring, Double Coil, Galv., 5/8"	2	2217	2	2217
19	Bolt, Machine, 5/8" x 16", Galv., 12,400 lbs Ultimate Tensile	2	157	2	157
20	Washer, Curved, Square, Cast, 3" x 3" x 3/8" Thick x 13/16" Hole	2	1392	2	1392
21	Arm, Epoxy 24" 2500 lbs	1	2605	1	2605
22	Insulator, Pin, C Neck, Polymer	1	1968	1	1968✲
23	Wire, Tie, AL Annealed #4 SD	11✲	3012	10	1421

Clark Public Utilities

CONSTRUCTION STANDARDS

3Ø VERTICAL W/ POLE TOP
0° TO 5°
397 AAC MAX WIRE

REVISIONS

R	DATE	ENGR	OPS
1	12/4/17	CM	DK

PAGE: 2 of 2

C13,C13TREE

CAD FILE: C13

APP: LB/AH
DATE: 9/06

SECTION 330

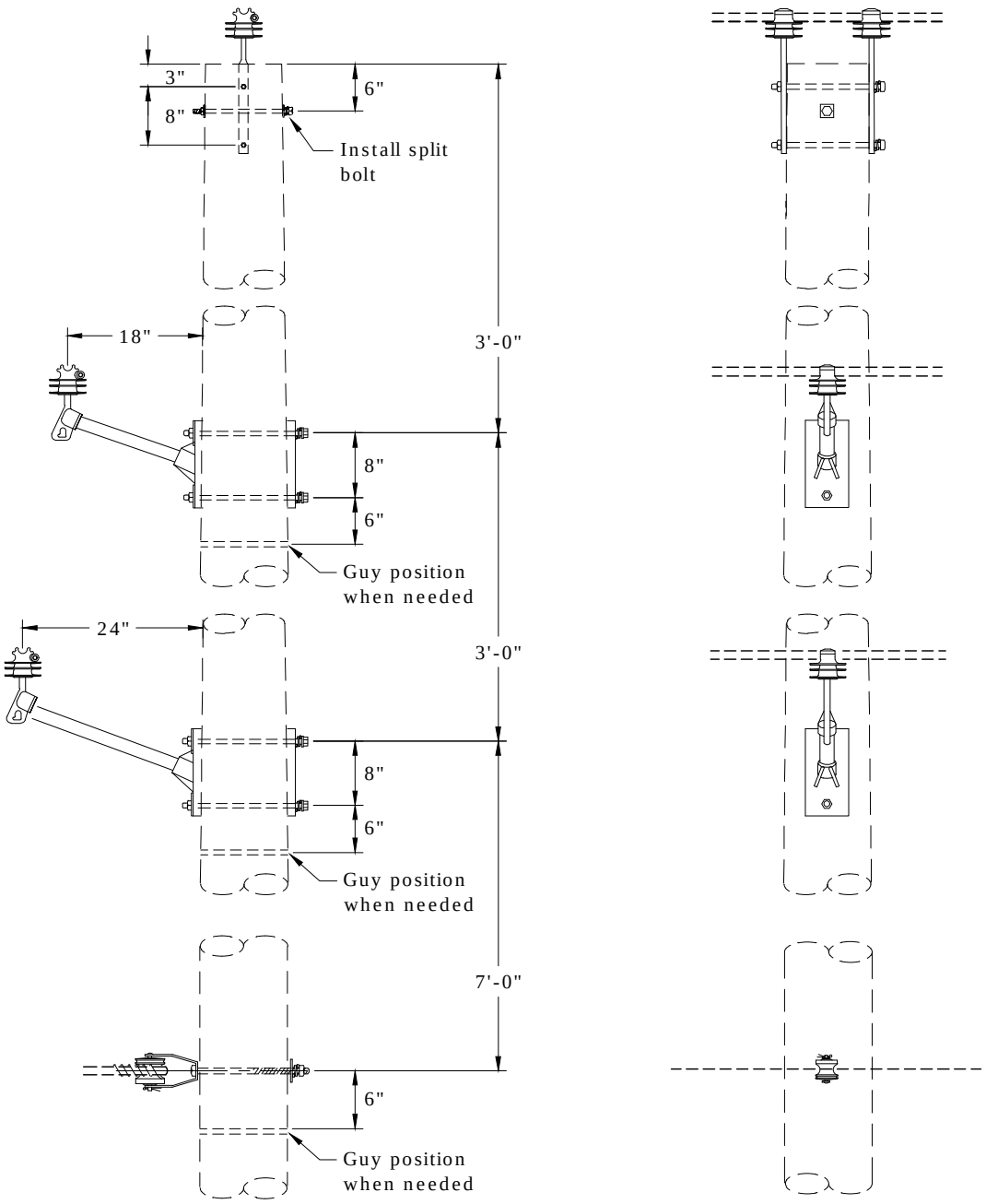

C14TREE - Avian Safe

Notes:

1. Maximum line angle calculated for 3,000 lbs. MWT and 250-ft ruling span.
2. See Std AC - Avian Covers - Section 400 if needed. Covers only required on center phase.

Rev. 1 - Eliminated porcelain pin insulators, added avian notes, and changed single top to double.

Clark Public Utilities

CONSTRUCTION STANDARDS

3Ø VERTICAL W/ DOUBLE POLE TOP
6° TO 15°
397 AAC MAX WIRE

REVISIONS			
R	DATE	ENGR	OPS
1	12/4/17	CM	DK

PAGE:		CAD FILE:	APP: LB/AH	SECTION
1 of 2	C14,C14TREE	C14	DATE: 12/19/07	330

PR2,PR2TREE

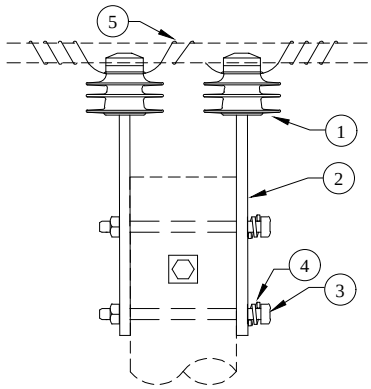

PR60,PR60TREE

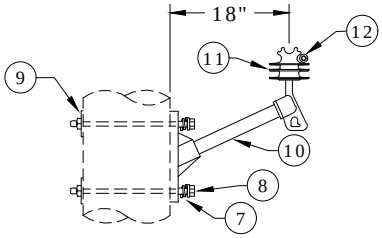

PR62,PR62TREE

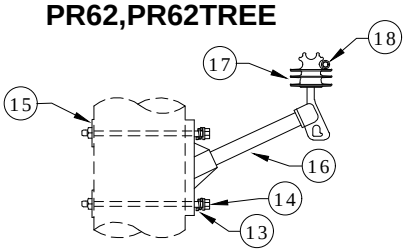

S2

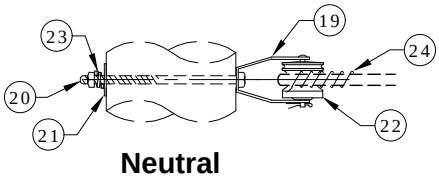

Neutral

Rev. 1 - Eliminated porcelain pin insulators, added avian notes, and changed single top to double.

ITEM NO.	DESCRIPTION	C14TREE PR2TREE QTY.	C14TREE PR2TREE S/N	C14 PR2 QTY.	C14 PR2 S/N
1	Insulator, Pin, C Neck, Polymer	2	1968	2	1968 ✲
2	Pin, Pole Top	2	962	2	962
3	Bolt, Machine, 5/8" x 14", Galv., 12,400 lbs Ultimate Tensile	2	156	2	156
4	Washer, Lock, Spring, Double Coil, Galv., 5/8"	2	2217	2	2217
5	Wire, Tie, AL Annealed #4 SD	22✲	3012	20	1421

ITEM NO.	DESCRIPTION	PR60TREE QTY.	PR60TREE S/N	PR60 QTY.	PR60 S/N
7	Washer, Lock, Spring, Double Coil, Galv., 5/8"	2	2217	2	2217
8	Bolt, Machine, 5/8" x 16", Galv., 12,400 lbs Ultimate Tensile	2	157	2	157
9	Washer, Curved, Square, Cast, 3" x 3" x 3/8" Thick x 13/16" Hole	2	1392	2	1392
10	Arm, Epoxy 18" 2500 lbs	1	2504	1	2504
11	Insulator, Pin, C Neck, Polymer	1	1968	1	1968✲
12	Wire, Tie, AL Annealed #4 SD	11✲	3012	10	1421

ITEM NO.	DESCRIPTION	PR62TREE QTY.	PR62TREE S/N	PR62 QTY.	PR62 S/N
13	Washer, Lock, Spring, Double Coil, Galv., 5/8"	2	2217	2	2217
14	Bolt, Machine, 5/8" x 16", Galv., 12,400 lbs Ultimate Tensile	2	157	2	157
15	Washer, Curved, Square, Cast, 3" x 3" x 3/8" Thick x 13/16" Hole	2	1392	2	1392
16	Arm, Epoxy 24" 2500 lbs	1	2605	1	2605
17	Insulator, Pin, C Neck, Polymer	1	1968	1	1968✲
18	Wire, Tie, AL Annealed #4 SD	11✲	3012	10	1421

ITEM NO.	DESCRIPTION	S2 QTY.	S2 S/N	S2 QTY.	S2 S/N
19	Clevis, D.E. Insulator 1340	1	335	1	335
20	Bolt, Machine, 5/8" x 14", Galv., 12,400 lbs Ultimate Tensile	1	156	1	156
21	Washer, Curved, Square, Cast, 3" x 3" x 3/8" Thick x 13/16" Hole	1	1392	1	1392
22	Insulator, Spool Clevis, Small, ANSI 53-2 Class	1	773	1	773
23	Washer, Lock, Spring, Double Coil, Galv., 5/8"	1	2217	1	2217
24	Wire, Tie, Bare, AL Annealed #4 SD	10	1421	10	1421

Clark Public Utilities

CONSTRUCTION STANDARDS

3Ø VERTICAL W/ DOUBLE POLE TOP
6° TO 15°
397 AAC MAX WIRE

REVISIONS

R	DATE	ENGR	OPS
1	12/4/17	CM	DK

PAGE: 2 of 2

C14,C14TREE

CAD FILE: C14

APP: LB/AH
DATE: 12/19/07

SECTION 330

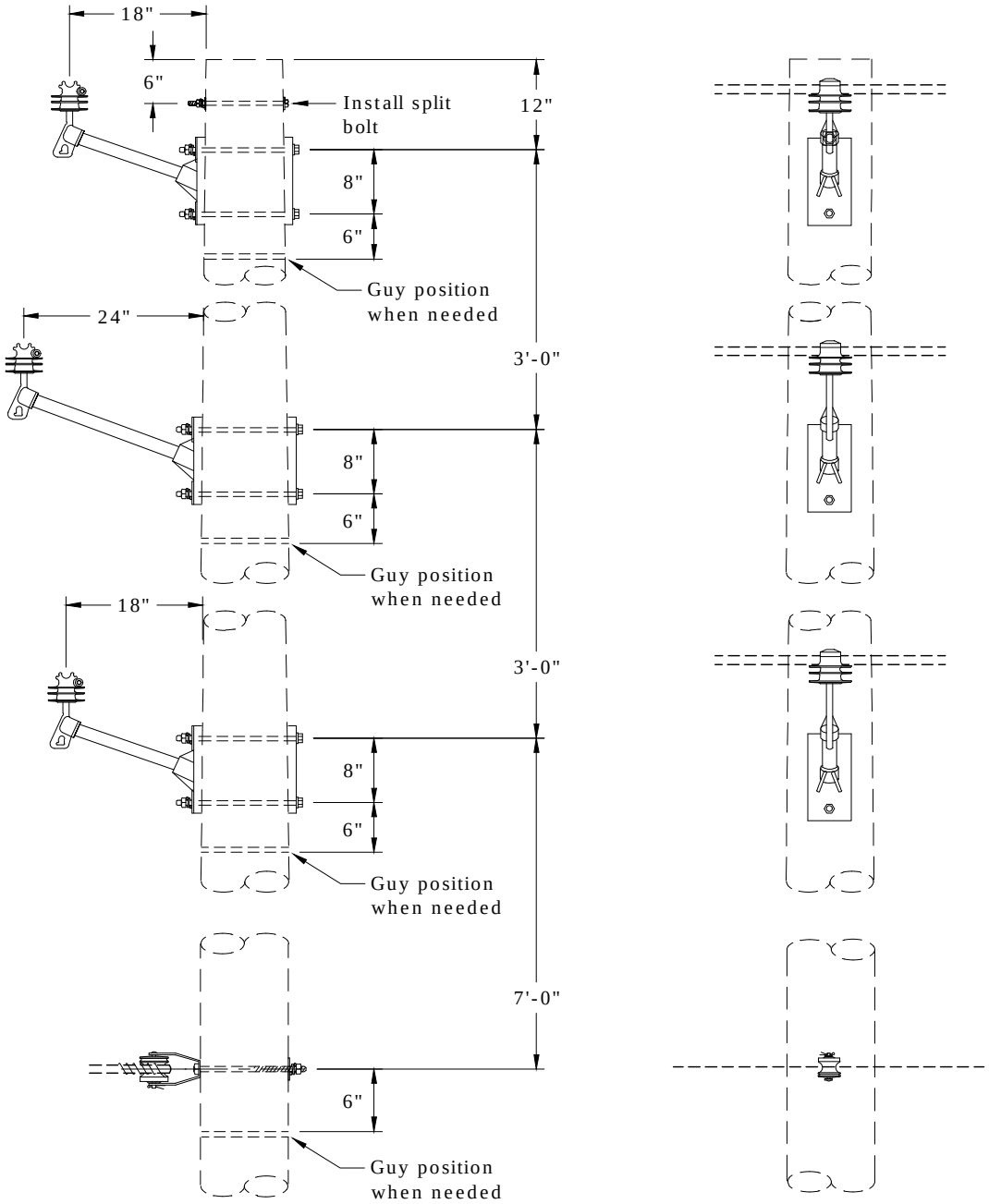

C15TREE - Avian Safe

Notes:

1. Maximum line angle calculated for 3,000 lbs. MWT and 250-ft ruling span.
2. See Std AC - Avian Covers - Section 400 if needed. Covers only required on center phase.

Rev. 1 - Eliminated porcelain pin insulators, added avian notes, and changed double pole top to twiggy for angle.

Clark Public Utilities

CONSTRUCTION STANDARDS

3Ø VERTICAL
16° TO 30°
397 AAC MAX WIRE

REVISIONS

R	DATE	ENGR	OPS
1	12/4/17	CM	DK

PAGE: 1 of 2

C15,C15TREE

CAD FILE: C15

APP: LB/AH
DATE: 12/19/07

SECTION 330

PR60,PR60TREE

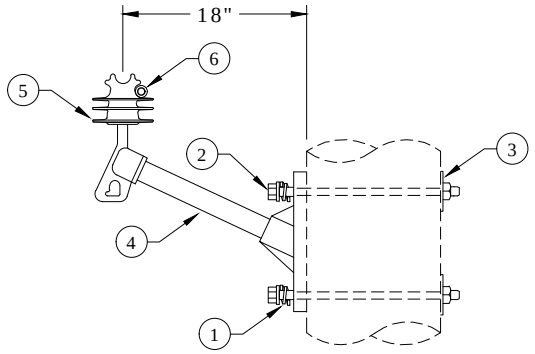

PR62,PR62TREE

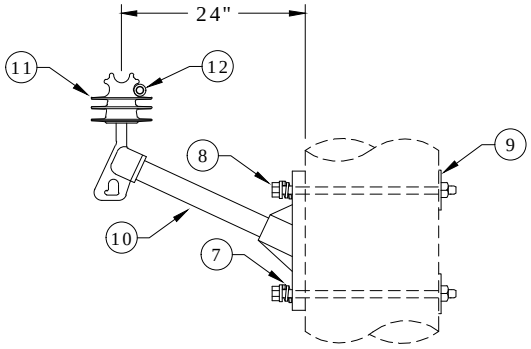

S2

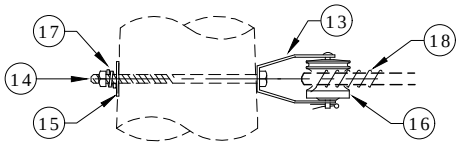

Neutral

Rev. 1 - Eliminated porcelain pin insulators, added avian notes, and changed double pole top to twiggy for angle.

ITEM NO.	DESCRIPTION	C15TREE PR60TREE(2) QTY.	C15TREE PR60TREE(2) S/N	C15 PR60 (2) QTY.	C15 PR60 (2) S/N
1	Washer, Lock, Spring, Double Coil, Galv., 5/8"	4	2217	4	2217
2	Bolt, Machine, 5/8" x 16", Galv., 12,400 lbs Ultimate Tensile	4	157	4	157
3	Washer, Curved, Square, Cast, 3" x 3" x 3/8" Thick x 13/16" Hole	4	1392	4	1392
4	Arm, Epoxy 18" 2500 lbs	2	2504	2	2504
5	Insulator, Pin, C Neck, Polymer	2	1968	2	1968✲
6	Wire, Tie, AL Annealed #4 SD	22✲	3012	20	1421

ITEM NO.	DESCRIPTION	PR62TREE QTY.	PR62TREE S/N	PR62 QTY.	PR62 S/N
7	Washer, Lock, Spring, Double Coil, Galv., 5/8"	2	2217	2	2217
8	Bolt, Machine, 5/8" x 16", Galv., 12,400 lbs Ultimate Tensile	2	157	2	157
9	Washer, Curved, Square, Cast, 3" x 3" x 3/8" Thick x 13/16" Hole	2	1392	2	1392
10	Arm, Epoxy 24" 2500 lbs	1	2605	1	2605
11	Insulator, Pin, C Neck, Polymer	1	1968	1	1968 ✲
12	Wire, Tie, AL Annealed #4 SD	11✲	3012	10	1421

ITEM NO.	DESCRIPTION	S2 QTY.	S2 S/N	S2 QTY.	S2 S/N
13	Clevis, D.E. Insulator 1340	1	335	1	335
14	Bolt, Machine, 5/8" x 14", Galv., 12,400 lbs Ultimate Tensile	1	156	1	156
15	Washer, Curved, Square, Cast, 3" x 3" x 3/8" Thick x 13/16" Hole	1	1392	1	1392
16	Insulator, Spool Clevis, Small, ANSI 53-2 Class	1	773	1	773
17	Washer, Lock, Spring, Double Coil, Galv., 5/8"	1	2217	1	2217
18	Wire, Tie, Bare, AL Annealed #4 SD	10	1421	10	1421

Clark Public Utilities

CONSTRUCTION STANDARDS

3Ø VERTICAL
16° TO 30°
397 AAC MAX WIRE

REVISIONS

R	DATE	ENGR	OPS
1	12/4/17	CM	DK

PAGE: 2 of 2

C15,C15TREE

CAD FILE: C15

APP: LB/AH
DATE: 12/19/07

SECTION 330

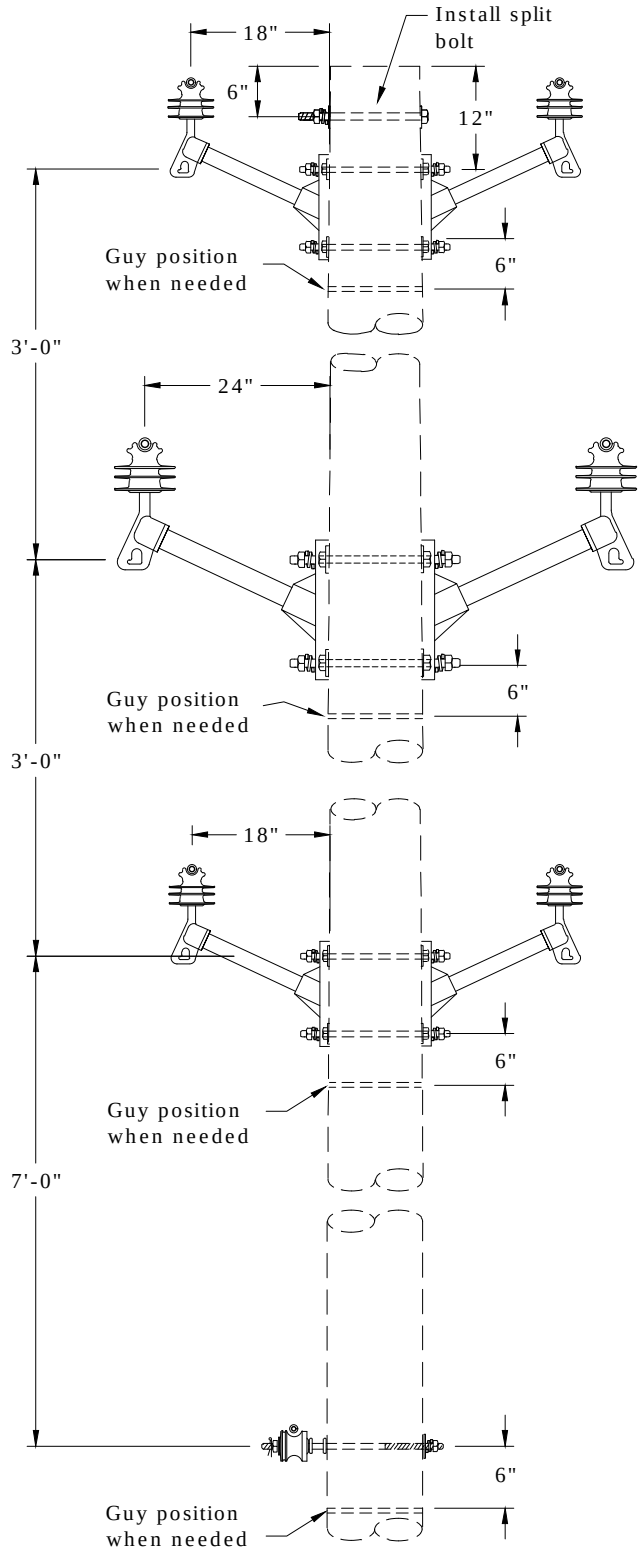

C16TREE - Avian Safe

Notes:

1. Maximum line angle calculated for 3,000 lbs. MWT and 250-ft ruling span.
2. See Std AC - Avian Covers - Section 400 if needed. Covers required on all three phases on one side of pole and center phase on opposite side.

Rev. 1 - Eliminated porcelain pin insulators and added avian notes.

Clark Public Utilities

CONSTRUCTION STANDARDS

3Ø DOUBLE TWIGGY CIRCUIT
0° TO 5°
397 AAC MAX WIRE

REVISIONS

R	DATE	ENGR	OPS
1	12/4/17	CM	DK

PAGE: 1 of 2

C16,C16TREE

CAD FILE: C16

APP: LB/AH
DATE: 12/19/07

SECTION 330

PR61, PR61TREE

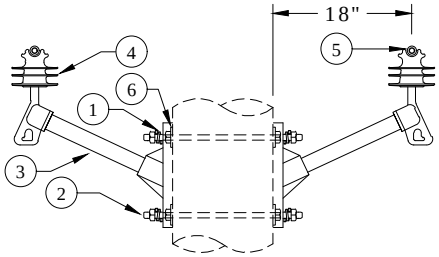

PR63, PR63TREE

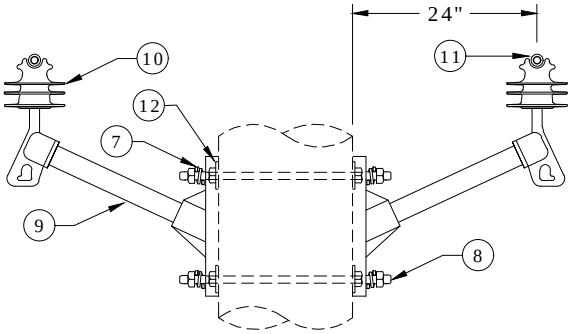

S1

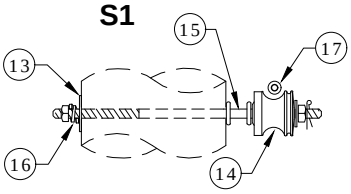

Neutral

Rev. 1 - Eliminated porcelain pin insulators and added avian notes.

ITEM NO.	DESCRIPTION	C16TREE PR61TREE (2) QTY.	C16TREE PR61TREE (2) S/N	C16 PR61(2) QTY.	C16 PR61(2) S/N
1	Washer, Lock, Spring Double Coil, Galv., 5/8"	8 ✲	2217	8 ✲	2217
2	Bolt, Double Arm, 5/8" x 18", Galv., 12,400 lbs Ultimate Tensile	4 ✲	82 ✲	4 ✲	82 ✲
3	Arm, Epoxy 18" 2500 lbs	4	2504	4	2504
4	Insulator, Pin, C Neck, Polymer	4	1968	4	1968 ✲
5	Wire, Tie, AL Annealed #4 SD	44 ✲	3012	40	1421
6	Washer, Flat Round Galv., 5/8"	8 ✲	1395	8 ✲	1395
	DESCRIPTION	PR63TREE QTY.	PR63TREE S/N	PR63 QTY.	PR63 S/N
7	Washer, Lock, Spring Double Coil, Galv., 5/8"	4 ✲	2217	4 ✲	2217
8	Bolt, Double Arm, 5/8" x 18", Galv., 12,400 lbs Ultimate Tensile	2 ✲	82 ✲	2 ✲	82 ✲
9	Arm, Epoxy 24" 2500 lbs	2	2605	2	2605
10	Insulator, Pin, C Neck, Polymer	2	1968	2	1968 ✲
11	Wire, Tie, AL Annealed #4 SD	22✲	3012	20	1421
12	Washer, Flat Round Galv., 5/8"	4 ✲	1395	4 ✲	1395
ITEM NO.	DESCRIPTION	S1 QTY.	S1 S/N	S1 QTY.	S1 S/N
13	Washer, Curved, Square, Cast, 3" x 3" x 3/8" Thick x 13/16" Hole	1	1392	1	1392
14	Insulator, Spool Clevis, Small, ANSI 53-2 Class	1	773	1	773
15	Bolt, Double Upset, 5/8" x 14", Galv., 12,400 lbs Ultimate Tensile✲	1	1580	1	1580
16	Washer, Lock, Spring Double Coil, Galv., 5/8" ✲	1	2217	1	2217
17	Wire, Tie, AL Annealed #4 SD	10	1421	10	1421

Clark Public Utilities

CONSTRUCTION STANDARDS

3Ø DOUBLE TWIGGY CIRCUIT
0° TO 5°
397 AAC MAX WIRE

REVISIONS

R	DATE	ENGR	OPS
1	12/4/17	CM	DK

PAGE: 2 of 2

C16,C16TREE

CAD FILE: C16

APP: LB/AH
DATE: 12/19/07

SECTION 330

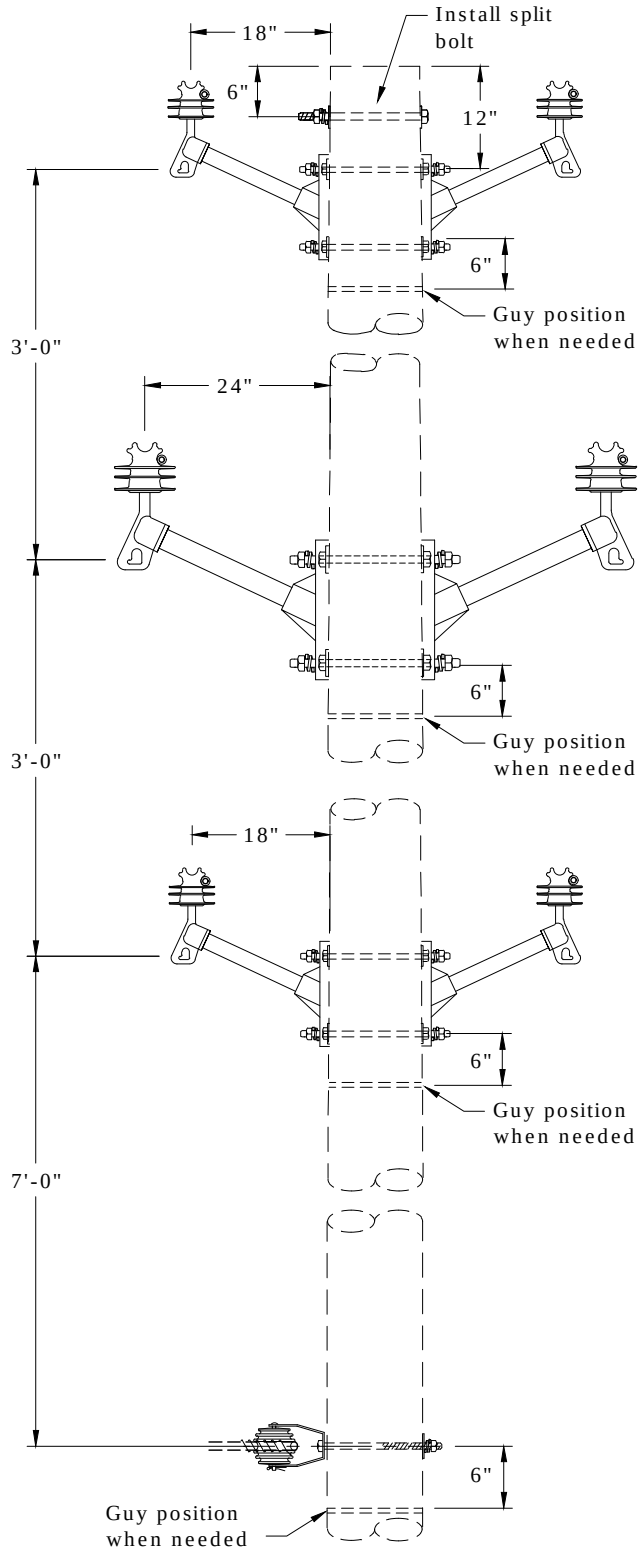

C17TREE - Avian Safe

Notes:

1. Maximum line angle calculated for 3,000 lbs. MWT and 250-ft ruling span.
2. See Std AC - Avian Covers - Section 400 if needed. Covers required on all three phases on one side of pole and center phase on opposite side.

Rev. 1 - Eliminated porcelain pin insulators and added avian notes.

Clark Public Utilities

CONSTRUCTION STANDARDS

3Ø DOUBLE TWIGGY CIRCUIT
6° TO 30°
397 AAC MAX WIRE

REVISIONS

R	DATE	ENGR	OPS
1	12/4/17	CM	DK

PAGE: 1 of 2

C17,C17TREE

CAD FILE: C17

APP: LB/AH
DATE: 12/19/07

SECTION 330

PR61,PR61TREE

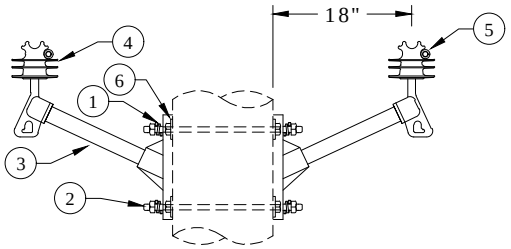

PR63,PR63TREE

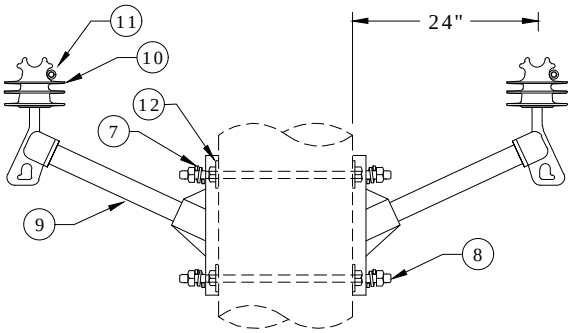

S3

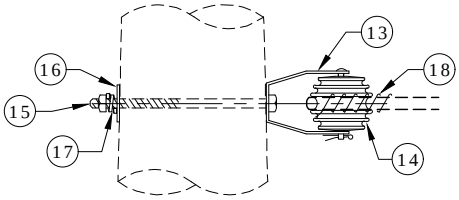

Neutral

Rev. 1 - Eliminated porcelain pin insulators and added avian notes.

ITEM NO.	DESCRIPTION	C17TREE PR61TREE(2) QTY.	C17TREE PR61TREE(2) S/N	C17 PR61(2) QTY.	C17 PR61(2) S/N
1	Washer, Lock, Spring, Double Coil, Galv., 5/8"	8 ✲	2217	8 ✲	2217
2	Bolt, Double Arm, 5/8" x 18", Galv., 12,400 lbs Ultimate Tensile	4 ✲	82 ✲	4 ✲	82 ✲
3	Arm, Epoxy 18" 2500 lbs	4	2504	4	2504
4	Insulator, Pin, C Neck, Polymer	4	1968	4	1968 ✲
5	Wire, Tie, AL Annealed #4 SD	44 ✲	3012	40	1421
6	Washer, Flat Round Galv., 5/8"	8 ✲	1395	8 ✲	1395

ITEM NO.	DESCRIPTION	PR63TREE QTY.	PR63TREE S/N	PR63 QTY.	PR63 S/N
7	Washer, Lock, Spring Double Coil, Galv., 5/8"	4 ✲	2217	4 ✲	2217
8	Bolt, Double Arm, 5/8" x 18", Galv., 12,400 lbs Ultimate Tensile	2 ✲	82 ✲	2 ✲	82 ✲
9	Arm, Epoxy 24" 2500 lbs	2	2605	2	2605
10	Insulator, Pin, C Neck, Polymer	2	1968	2	1968 ✲
11	Wire, Tie, AL Annealed #4 SD	22 ✲	3012	20	1421
12	Washer, Flat Round Galv., 5/8"	4 ✲	1395	4 ✲	1395

ITEM NO.	DESCRIPTION	S3 QTY.	S3 S/N	S3 QTY.	S3 S/N
13	Clevis, D.E. Insulator 1344	1	336 ✲	1	336 ✲
14	Insulator, Spool Clevis, Large, ANSI 53-5 Class	1	774 ✲	1	774 ✲
15	Bolt, Machine, 5/8" x 14", Galv., 12,400 lbs Ultimate Tensile	1	156	1	156
16	Washer, Curved, Square, Cast, 3" x 3" x 3/8" Thick x 13/16" Hole	1	1392	1	1392
17	Washer, Lock, Spring Double Coil, Galv., 5/8"	1	2217	1	2217
18	Wire, Tie, AL Annealed #4 SD	10	1421	10	1421

Clark Public Utilities

CONSTRUCTION STANDARDS

3Ø DOUBLE TWIGGY CIRCUIT
6° TO 30°
397 AAC MAX WIRE

REVISIONS

R	DATE	ENGR	OPS
1	12/4/17	CM	DK

PAGE: 2 of 2

C17,C17TREE

CAD FILE: C17

APP: LB/AH
DATE: 12/19/07

SECTION 330

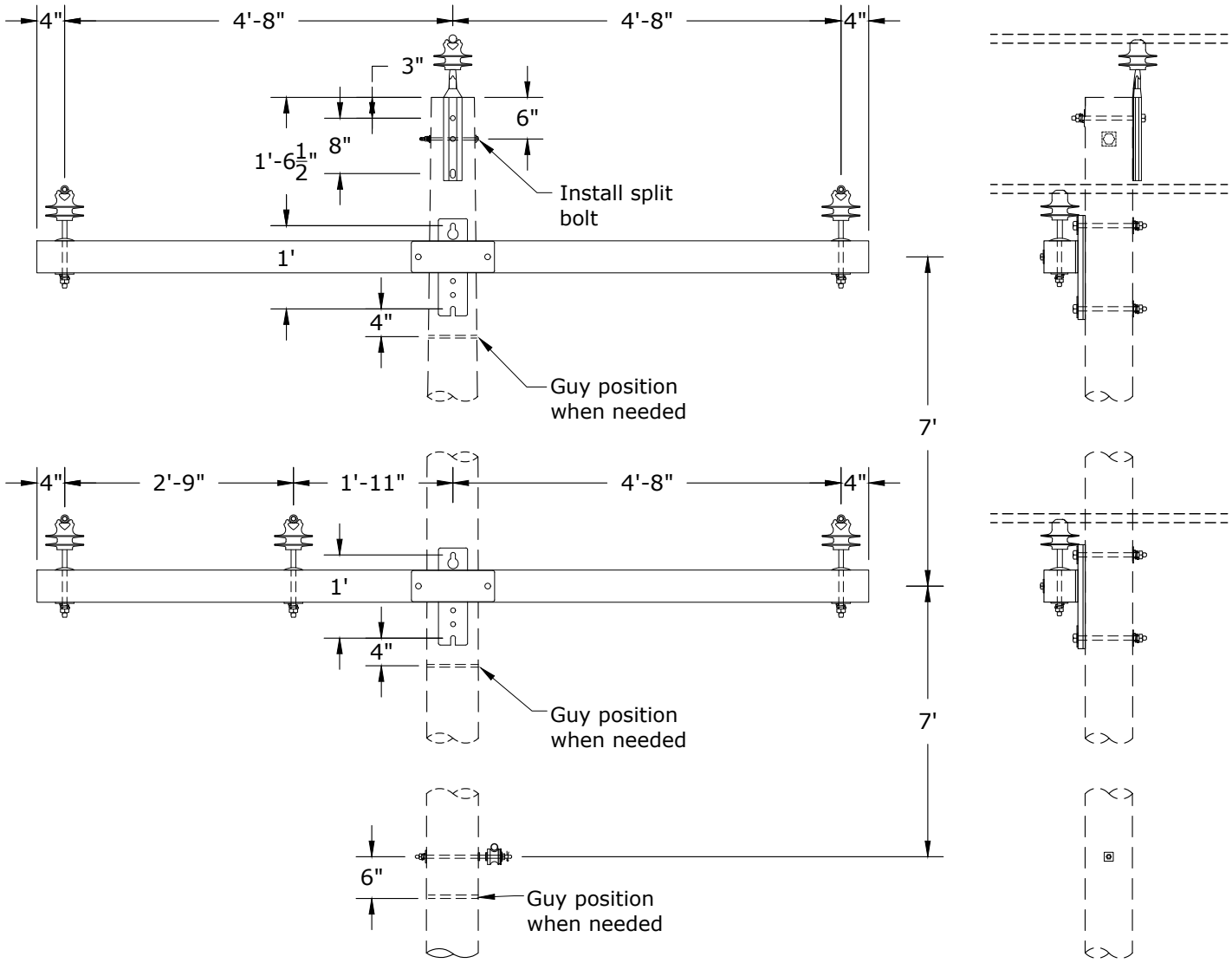

C19BTREE - Avian Safe

Notes:

1. Maximum line angle calculated for 3,000 lb MWT and 250-ft ruling span.
2. See Std AC - Avian Covers - Section 400 if needed. Covers only required on center phases.

Rev. 2 - Changed to fiberglass crossarms.

Clark Public Utilities

CONSTRUCTION STANDARDS

3Ø SINGLE 10' CROSSARM
DOUBLE CIRCUIT - 0° TO 5°
397 AAC MAX WIRE

REVISIONS

R	DATE	ENGR	OPS
1	12/4/17	CM	DK
2	2/11/25	CM	GM

PAGE: 1 of 2

C19B,C19BTREE

CAD FILE: C19B

APP: LB/AH
DATE: 12/19/07

SECTION 330

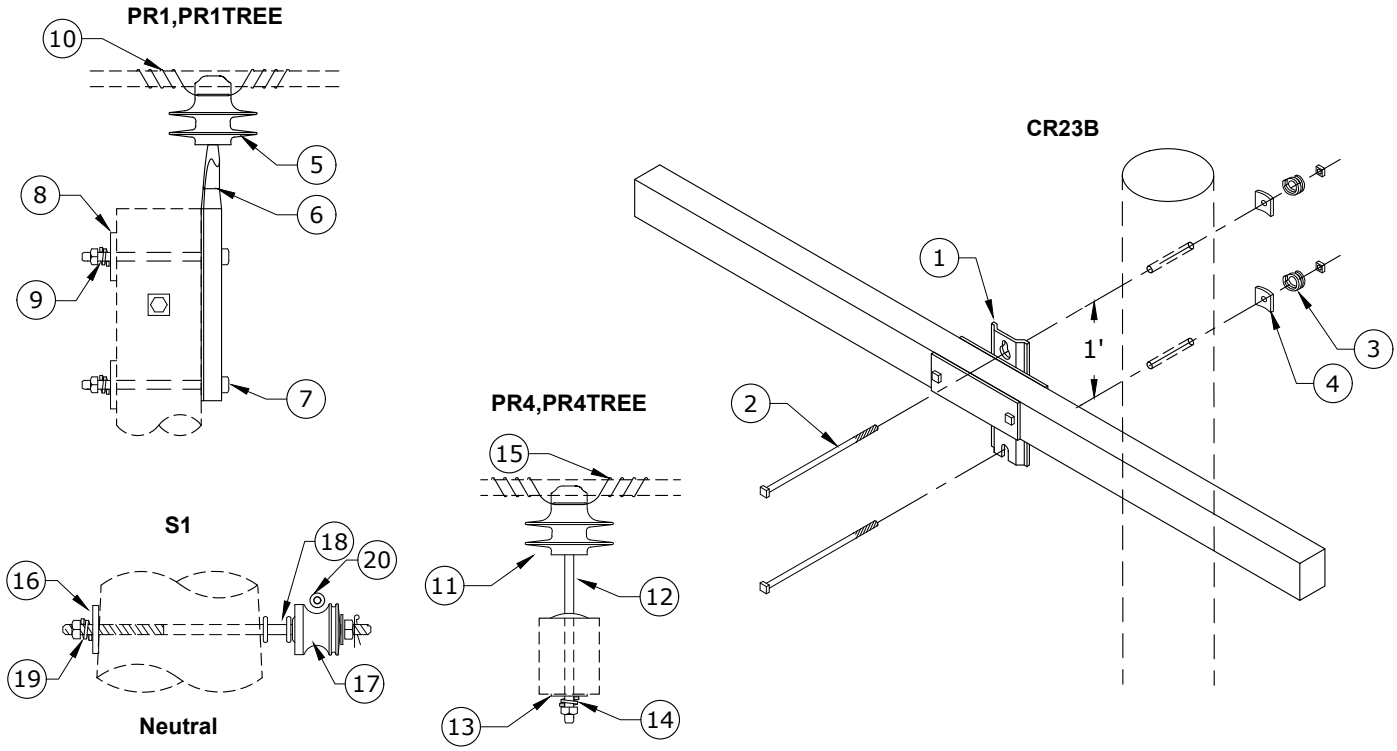

Rev. 2 - Changed to fiberglass crossarms.

ITEM NO	DESCRIPTION	C19BTREE		C19B	
		CR23B (2) ✲		CR23B (2) ✲	
		QTY	S/N	QTY	S/N
1	Crossarm, Distribution, Fiberglass, 10' Long x 3-5/8" Wide x 4-5/8" High	2	3031	2	3031
2	Bolt, Machine, 5/8" x 14", Galv, 12,400 lb Ultimate Tensile	4	156	4	156
3	Washer, Lock, Spring, Double Coil, Galv, 5/8"	4	2217	4	2217
4	Washer, Curved, Square, Cast, 3" x 3" x 3/8" Thick x 13/16" Hole	4	1392	4	1392
ITEM NO	DESCRIPTION	PR1TREE		PR1	
		QTY	S/N	QTY	S/N
5	Insulator, Pin, C Neck, Polymer	1	1968	1	1968
6	Pin, Pole Top	1	962	1	962
7	Bolt, Machine, 5/8" x 12", Galv, 12,400 lb Ultimate Tensile	2	155	2	155
8	Washer, Curved, Square, Cast, 3" x 3" x 3/8" Thick x 13/16" Hole	2	1392	2	1392
9	Washer, Lock, Spring, Double Coil, Galv, 5/8"	2	2217	2	2217
10	Wire, Tie, AL Annealed #4 SD	11	3012	10	1421
ITEM NO	DESCRIPTION	PR4TREE (5)		PR4 (5)	
		QTY	S/N	QTY	S/N
11	Insulator, Pin, C Neck, Polymer	5	1968	5	1968 ✲
12	Pin, Crossarm	5	961	5	961
13	Washer, Square, Flat, 5/8", 2 1/4" x 2 1/4"	5	1412	5	1412
14	Washer, Lock, Spring, Double Coil, Galv, 5/8"	5	2217	5	2217
15	Wire, Tie, AL Annealed #4 SD	55	3012	50	1421
ITEM NO	DESCRIPTION	S1		S1	
		QTY	S/N	QTY	S/N
16	Washer, Curved, Square, Cast, 3" x 3" x 3/8" Thick x 13/16" Hole	1	1392	1	1392
17	Insulator, Spool Clevis, Small, ANSI 53-2 Class	1	773	1	773
18	Bolt, Double Upset, 5/8" x 14", Galv, 12,400 lb Ultimate Tensile	1	1580	1	1580
19	Washer, Lock, Spring, Double Coil, Galv, 5/8"	1	2217	1	2217
20	Wire, Tie, AL Annealed #4 SD	10	1421	10	1421

Clark Public Utilities

CONSTRUCTION STANDARDS

3Ø SINGLE 10' CROSSARM
DOUBLE CIRCUIT - 0° TO 5°
397 AAC MAX WIRE

REVISIONS

R	DATE	ENGR	OPS
1	12/4/17	CM	DK
2	2/11/25	CM	GM

PAGE: 2 of 2

C19B,C19BTREE

CAD FILE: C19B

APP: LB/AH
DATE: 12/19/07

SECTION 330

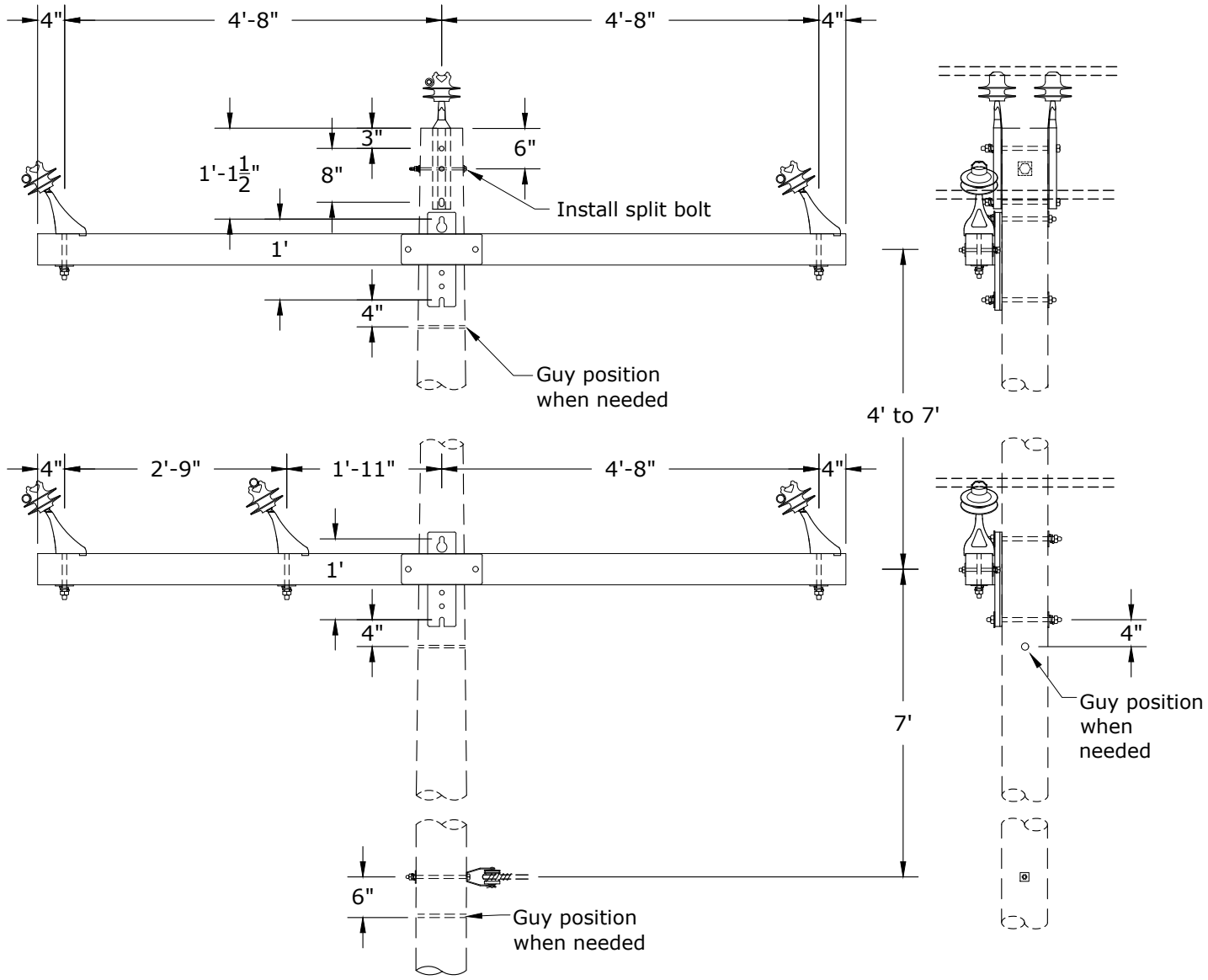

C20BTREE - Avian Safe

Notes:

1. Maximum line angle calculated for 3,000 lb MWT and 250-ft ruling span.
2. See Std AC - Avian Covers - Section 400 if needed. Covers only required on center phases.

Rev. 2 - Changed to single fiberglass crossarm with angle pin.

Clark Public Utilities

CONSTRUCTION STANDARDS

3Ø SINGLE 10' CROSSARM
DOUBLE CIRCUIT- 6° TO 15°
397 AAC MAX WIRE

REVISIONS			
R	DATE	ENGR	OPS
1	12/4/17	CM	DK
2	2/11/25	CM	GM

PAGE: 1 of 2

C20B,C20BTREE

CAD FILE: C20B

APP: LB/AH
DATE: 12/19/07

SECTION 330

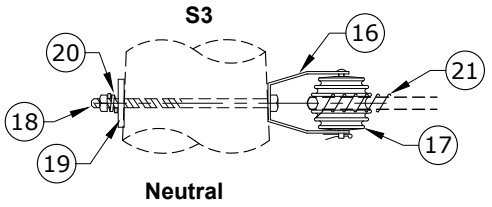

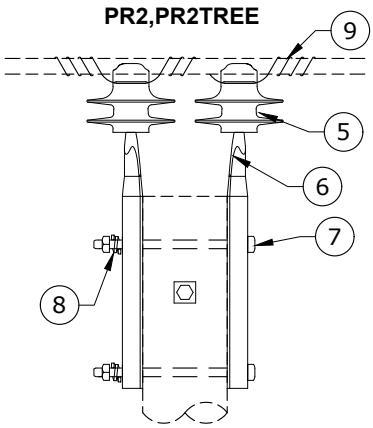

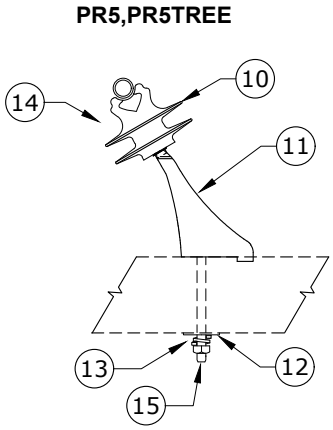

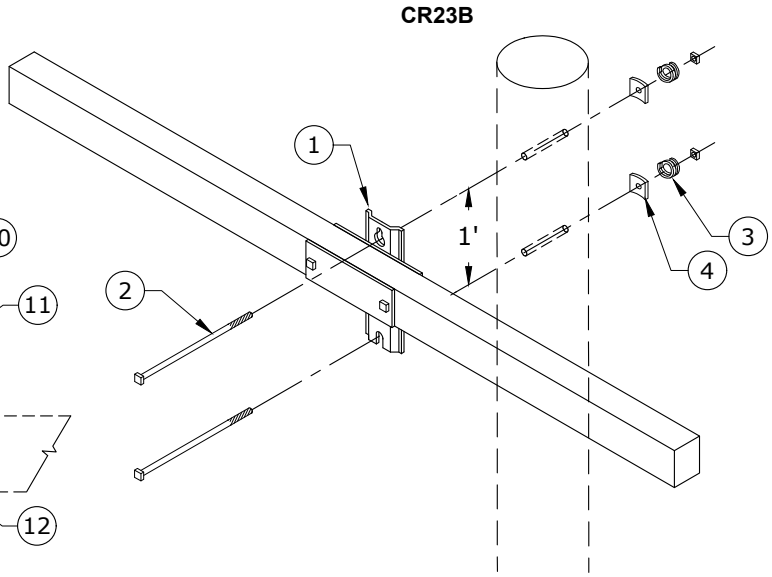

Rev. 2 - Changed to single fiberglass crossarm with angle pin.

ITEM NO	DESCRIPTION	C20BTREE CR23B (2) ✲ QTY	C20BTREE CR23B (2) ✲ S/N	C20B CR23B (2) ✲ QTY	C20B CR23B (2) ✲ S/N
1	Crossarm, Distribution, Fiberglass, 10' Long x 3-5/8" Wide x 4-5/8" High	2	3031	2	3031
2	Bolt, Machine, 5/8" x 14", Galv, 12,400 lb Ultimate Tensile	4	156	4	156
3	Washer, Lock, Spring, Double Coil, Galv, 5/8"	4	2217	4	2217
4	Washer, Curved, Square, Cast, 3" x 3" x 3/8" Thick x 13/16" Hole	4	1392	4	1392

ITEM NO	DESCRIPTION	PR2TREE QTY	PR2TREE S/N	PR2 QTY	PR2 S/N
5	Insulator, Pin, C Neck, Polymer	2	1968	2	1968
6	Pin, Pole Top	2	962	2	962
7	Bolt, Machine, 5/8" x 14", Galv, 12,400 lb Ultimate Tensile	2	156	2	156
8	Washer, Lock, Spring, Double Coil, Galv, 5/8"	2	2217	2	2217
9	Wire, Tie, AL Annealed #4 SD	22	3012	20	1421

ITEM NO	DESCRIPTION	PR5TREE (5) QTY	PR5TREE (5) S/N	PR5 (5) QTY	PR5 (5) S/N
10	Insulator, Pin, C Neck, Polymer	5	1968	5	1968
11	Pin, Angle, Crossarm	5	2658	5	2658
12	Washer, Square Flat, 5/8", 2 1/4" x 2 1/4"	5	1412	5	1412
13	Washer, Lock, Spring, Double Coil, Galv, 5/8"	5	2217	5	2217
14	Wire, Tie, AL Annealed #4 SD	55	3012	50	1421
15	Bolt, Machine, 5/8" x 7", Galv, 12,400 lb Ultimate Tensile	5	2606	5	2606

ITEM NO	DESCRIPTION	S3 QTY	S3 S/N	S3 QTY	S3 S/N
16	Clevis, D.E. Insulator 1344	1	336	1	336
17	Insulator, Spool Clevis, Large, ANSI 53-5 Class	1	774	1	774✲
18	Bolt, Machine, 5/8" x 14", Galv, 12,400 lb Ultimate Tensile	1	156	1	156
19	Washer, Curved, Square, Cast, 3" x 3" x 3/8" Thick x 13/16" Hole	1	1392	1	1392
20	Washer, Lock, Spring, Double Coil, Galv, 5/8"	1	2217	1	2217
21	Wire, Tie, AL Annealed #4 SD	10	1421	10	1421

Clark Public Utilities

CONSTRUCTION STANDARDS

3Ø SINGLE 10' CROSSARM
DOUBLE CIRCUIT- 6° TO 15°
397 AAC MAX WIRE

REVISIONS

R	DATE	ENGR	OPS
1	12/4/17	CM	DK
2	2/11/25	CM	GM

PAGE: 2 of 2

C20B,C20BTREE

CAD FILE: C20B

APP: LB/AH
DATE: 12/19/07

SECTION 330

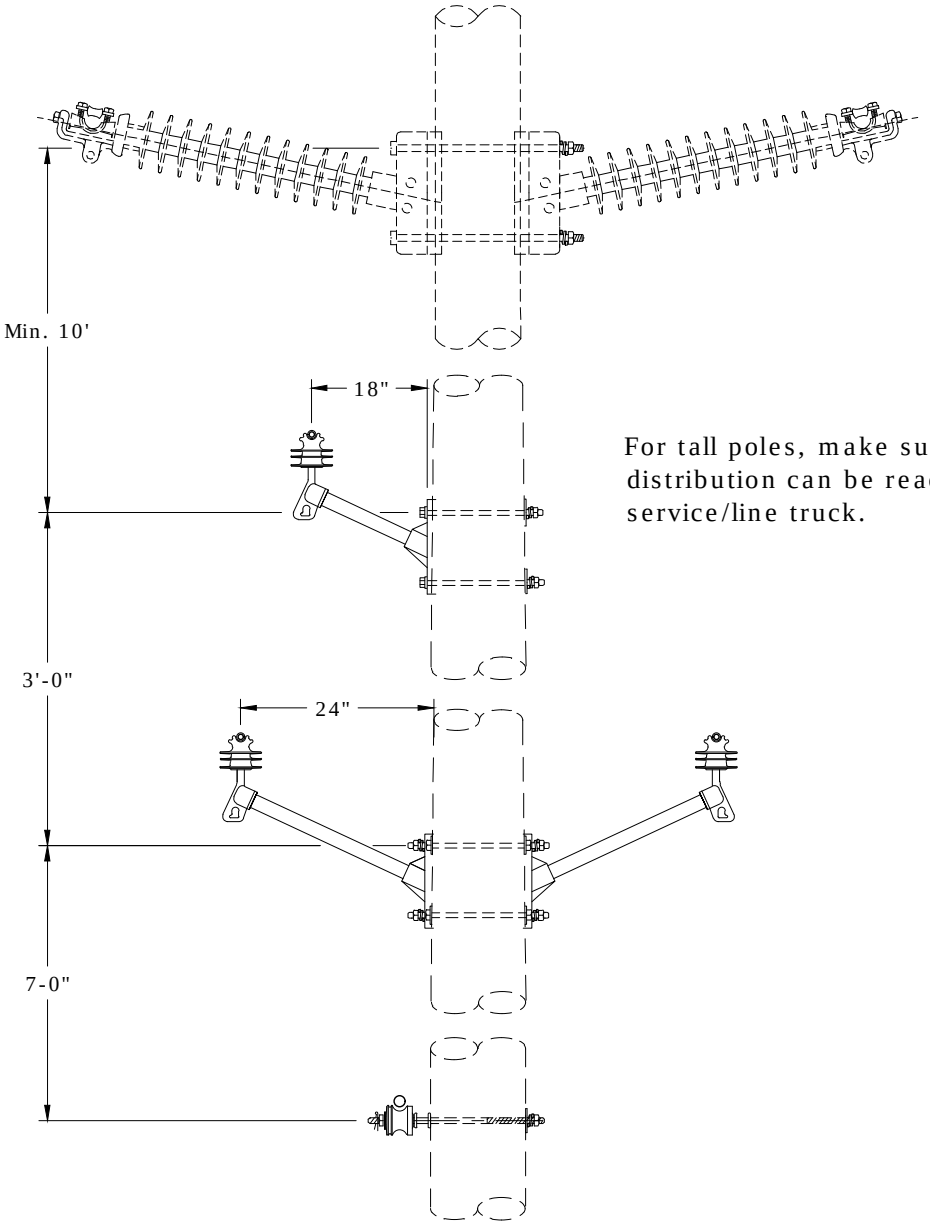

For tall poles, make sure the distribution can be reached by a service/line truck.

Notes:

1. Maximum line angle calculated for 3,000 lbs. MWT and 250-ft ruling span.
2. See Std AC - Avian Covers - Section 400 if needed. Covers only required on top phase and one of the bottom phases of the distribution.

Clark Public Utilities

CONSTRUCTION STANDARDS

3Ø TWIGGY TRANSMISSION UNDERBUILD
0° TO 5°
397 AAC MAX WIRE

REVISIONS			
R	DATE	ENGR	OPS

PAGE:		CAD FILE:	APP: CM/AH	SECTION
1 of 2	C22,C22TREE	C22	DATE: 12/4/17	330

PR60,PR60TREE

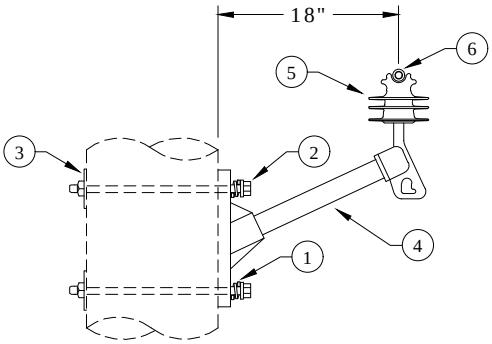

S1

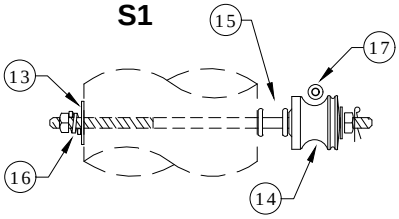

PR63,PR63TREE

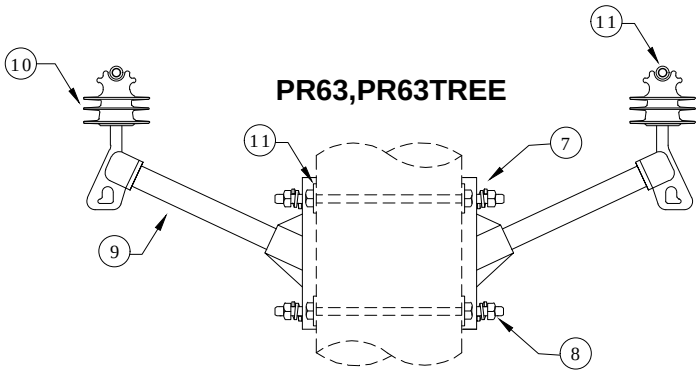

ITEM NO.	DESCRIPTION	C22TREE PR60TREE QTY.	C22TREE PR60TREE S/N	C22 PR60 QTY.	C22 PR60 S/N
1	Washer, Lock, Spring, Double Coil, Galv., 5/8"	2	2217	2	2217
2	Bolt, Machine, 5/8" x 16", Galv., 12,400 lbs. Ultimate Tensile	2	157	2	157
3	Washer, Curved, Square, Cast, 3" x 3" x 3/8" Thick x 13/16" Hole	2	1392	2	1392
4	Arm, Epoxy 18" 2500 lbs	1	2504	1	2504
5	Insulator, Pin, C Neck, Polymer	1	1968	1	1968
6	Wire, Tie, AL Annealed #4 SD	11✲	3012	10	1421
ITEM NO.	**DESCRIPTION**	**PR63TREE QTY.**	**PR63TREE S/N**	**PR63 QTY.**	**PR63 S/N**
7	Washer, Lock, Spring, Double Coil, Galv., 5/8"	4✲	2217	4✲	2217
8	Bolt, Double Arm, 5/8" x 18", Galv., 12,400 lbs Ultimate Tensile	2✲	82 ✲	2✲	82 ✲
9	Arm, Epoxy 24" 2500 lbs	2	2605	2	2605
10	Insulator, Pin, C Neck, Polymer	2	1968	2	1968 ✲
11	Wire, Tie, AL Annealed #4 SD	22✲	3012	20	1421
12	Washer, Flat, Round, Galv., 5/8"	4✲	1395	4✲	1395
ITEM NO.	**DESCRIPTION**	**S1 QTY.**	**S1 S/N**	**S1 QTY.**	**S1 S/N**
13	Washer, Curved, Square, Cast, 3" x 3" x 3/8" Thick x 13/16" Hole	1	1392	1	1392
14	Insulator, Spool, Clevis, Small, ANSI 53-2 Class	1	773	1	773
15	Bolt, Double Upset, 5/8" x 14", Galv., 12,400 lbs. Ultimate Tensile	1	1580	1	1580
16	Washer, Lock, Spring, Double Coil, Galv., 5/8"	1	2217	1	2217
17	Wire, Tie, AL Annealed #4 SD	10	1421	10	1421

Clark Public Utilities

CONSTRUCTION STANDARDS

3Ø TWIGGY TRANSMISSION UNDERBUILD
0° TO 5°
397 AAC MAX WIRE

REVISIONS

R	DATE	ENGR	OPS

PAGE: 2 of 2

C22,C22TREE

CAD FILE: C22

APP: CM/AH
DATE: 12/4/17

SECTION 330

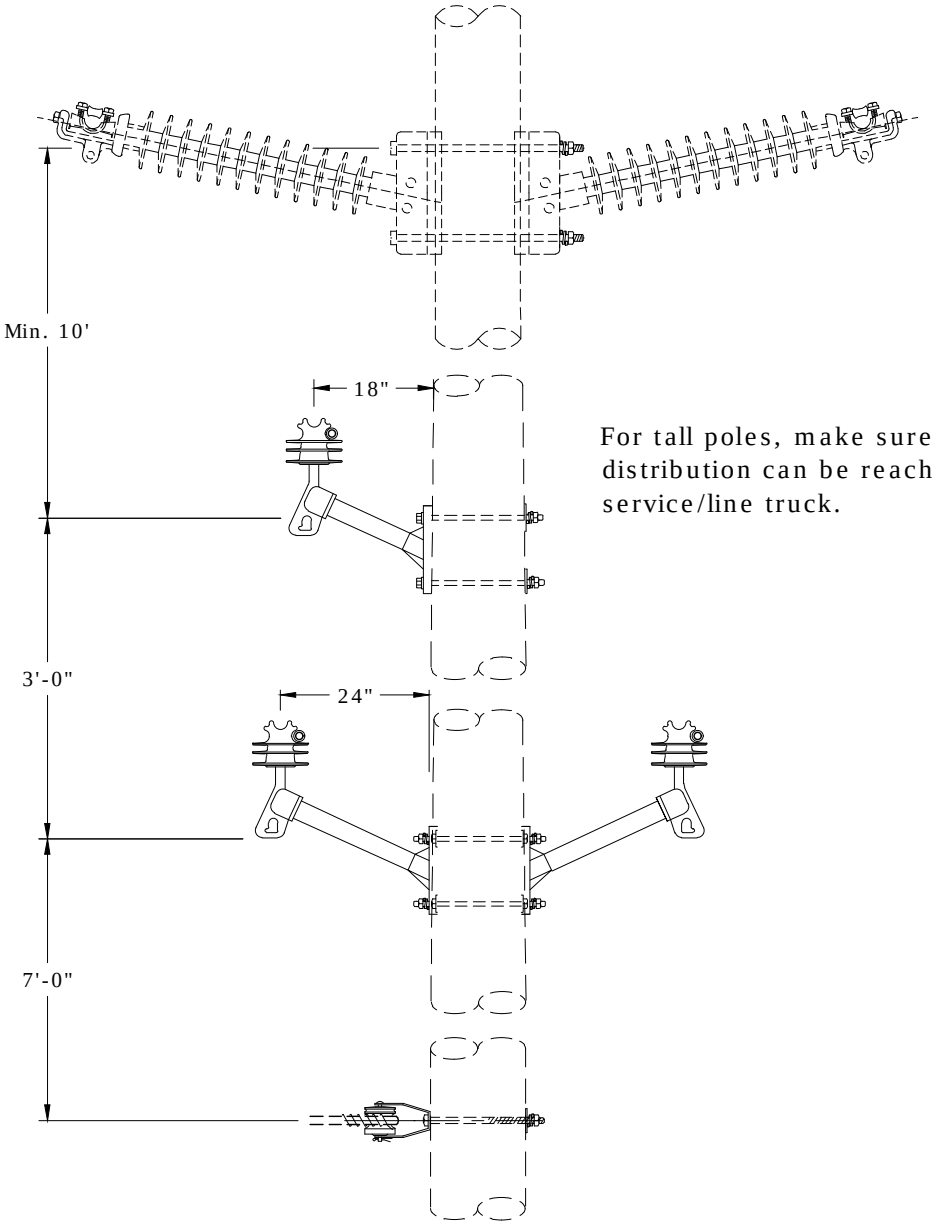

For tall poles, make sure the distribution can be reached by a service/line truck.

Notes:

1. Maximum line angle calculated for 3,000 lbs. MWT and 250-ft ruling span.
2. See Std AC - Avian Covers - Section 400 if needed. Covers only required on top phase and one of the bottom phases of the distribution.

Clark Public Utilities

CONSTRUCTION STANDARDS

3Ø TWIGGY TRANSMISSION UNDERBUILD
6° TO 30°
397 AAC MAX WIRE

REVISIONS			
R	DATE	ENGR	OPS

PAGE:	CAD FILE:	APP: CM/AH	SECTION
1 of 2	C23	DATE: 12/4/17	330

C23,C23TREE

PR60,PR60TREE

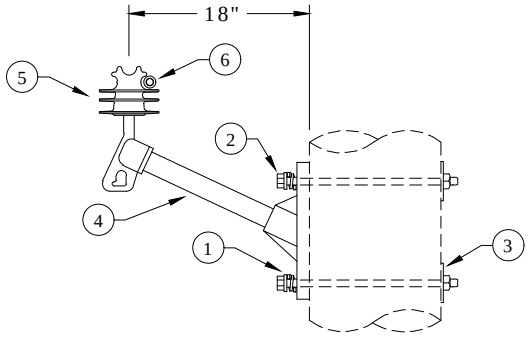

S2

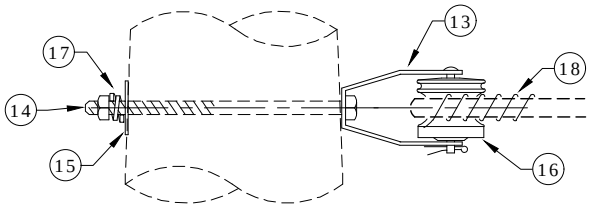

PR63,PR63TREE

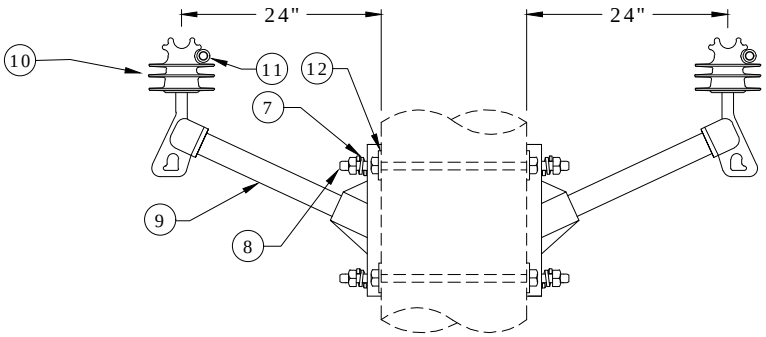

ITEM NO.	DESCRIPTION	C23TREE PR60TREE QTY.	C23TREE PR60TREE S/N	C23 PR60 QTY.	C23 PR60 S/N
1	Washer, Lock, Spring, Double Coil, Galv., 5/8"	2	2217	2	2217
2	Bolt, Machine, 5/8" x 16", Galv., 12,400 lbs. Ultimate Tensile	2	157	2	157
3	Washer, Curved, Square, Cast, 3" x 3" x 3/8" Thick x 13/16" Hole	2	1392	2	1392
4	Arm, Epoxy 18" 2500 lbs	1	2504	1	2504
5	Insulator, Pin, C Neck, Polymer	1	1968	1	1968
6	Wire, Tie, AL Annealed #4 SD	11✲	3012	10	1421

ITEM NO.	DESCRIPTION	PR63TREE QTY.	PR63TREE S/N	PR63 QTY.	PR63 S/N
7	Washer, Lock, Spring, Double Coil, Galv., 5/8"	4✲	2217	4✲	2217
8	Bolt, Double Arm, 5/8" x 18" Galv., 12,400 lbs Ultimate Tensile	2✲	82✲	2✲	82✲
9	Arm, Epoxy 24" 2500 lbs	2	2605	2	2605
10	Insulator, Pin, C Neck, Polymer	2	1968	2	1968✲
11	Wire, Tie, AL Annealed #4 SD	22✲	3012	20	1421
12	Washer, Flat, Round Galv., 5/8"	4✲	1395	4✲	1395

ITEM NO.	DESCRIPTION	S2 QTY.	S2 S/N	S2 QTY.	S2 S/N
13	Clevis, D.E. Insulator 1340	1	335	1	335
14	Bolt, Machine, 5/8" x 14", Galv., 12,400 lbs. Ultimate Tensile	1	156	1	156
15	Washer, Curved, Square, Cast, 3" x 3" x 3/8" Thick x 13/16" Hole	1	1392	1	1392
16	Insulator, Spool, Clevis, Small, ANSI 53-2 Class	1	773	1	773
17	Washer, Lock, Spring, Double Coil Galv., 5/8"	1	2217	1	2217
18	Wire, Tie, AL Annealed #4 SD	10	1421	10	1421

Clark Public Utilities

CONSTRUCTION STANDARDS

3Ø TWIGGY TRANSMISSION UNDERBUILD
6° TO 30°
397 AAC MAX WIRE

REVISIONS

R	DATE	ENGR	OPS

PAGE: 2 of 2

C23,C23TREE

CAD FILE: C23

APP: CM/AH
DATE: 12/4/17

SECTION 330

FRONT VIEW

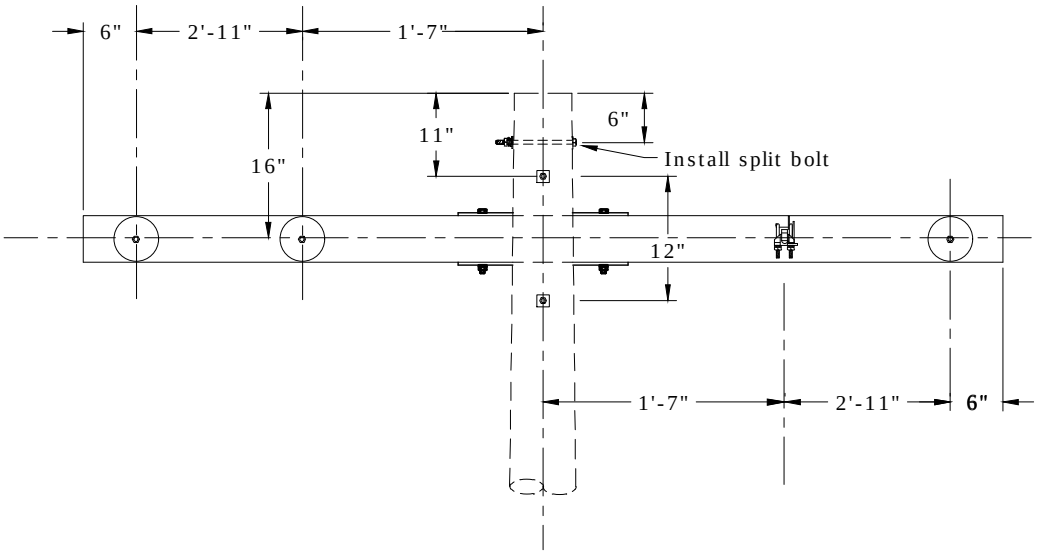

TOP VIEW

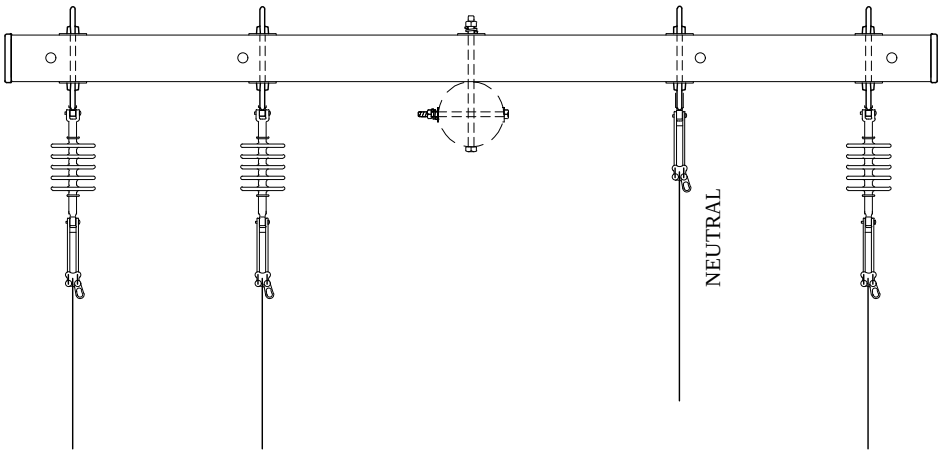

Notes:

1. This framing is for clearance limited situations only.
2. See Std AC - Avian Covers - Section 400 if needed. Covers only required on center phase and phase on neutral side.

Rev. 1 - Added avian note.

Clark Public Utilities

CONSTRUCTION STANDARDS

10' PRE-ASSEMBLED DEADEND
HIGH NEUTRAL
397 AAC MAX WIRE

REVISIONS

R	DATE	ENGR	OPS
1	12/4/17	CM	DK

PAGE: 1 of 2

C48B

CAD FILE: C48B

APP: LB/AH
DATE: 12/19/07

SECTION 330

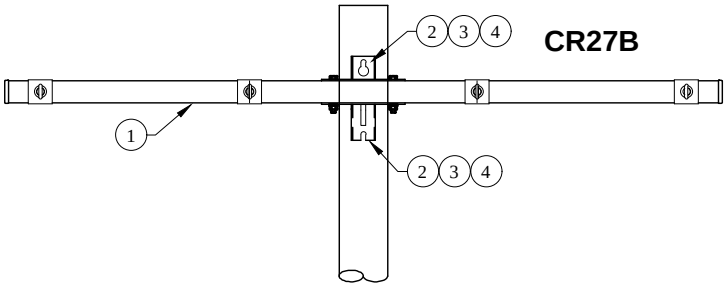

Back View

PR24

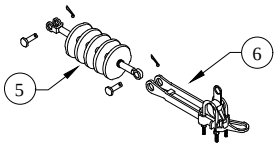

Phases

S/N 302

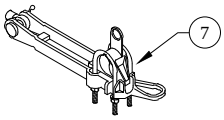

Neutral

Rev. 1 - Added avian note.

ITEM NO.	DESCRIPTION	C48B CR27B QTY.	S/N
1	Arm, Deadend Assembly, 10', 4-position, 397 Max	1	2555
2	Bolt, Machine, 3/4" x 14", Galv., 18,350 lbs Ultimate Tensile	2	174
3	Washer, Lock, Spring, Double Coil, Galv., 3/4"	2	2218
4	Washer, Curved, Square, Cast, 3" x 3" x 3/8" Thick x 13/16" Hole	2	1392
ITEM NO.	**DESCRIPTION**	**PR24 (3) QTY.**	**S/N**
5	Insulator, Suspension, 15 kV Clevis-Tongue, Polymer Type	3	1967
6	Clamp, Strain, Distribution, #2 to 397.5	3	302
ITEM NO.	**DESCRIPTION**	**Additional Material QTY.**	**S/N**
7	Clamp, Strain, Distribution, #2 - 397.5	1	302

Clark Public Utilities

CONSTRUCTION STANDARDS

10' PRE-ASSEMBLED DEADEND
HIGH NEUTRAL
397 AAC MAX WIRE

REVISIONS

R	DATE	ENGR	OPS
1	12/4/17	CM	DK

PAGE: 2 of 2

C48B

CAD FILE: C48B

APP: LB/AH
DATE: 12/19/07

SECTION 330

FRONT VIEW

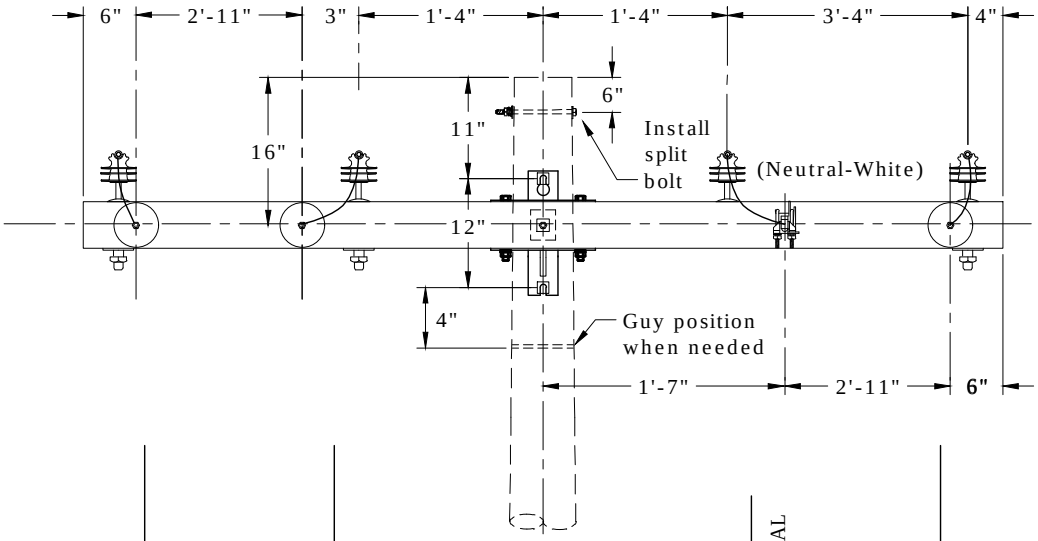

TOP VIEW

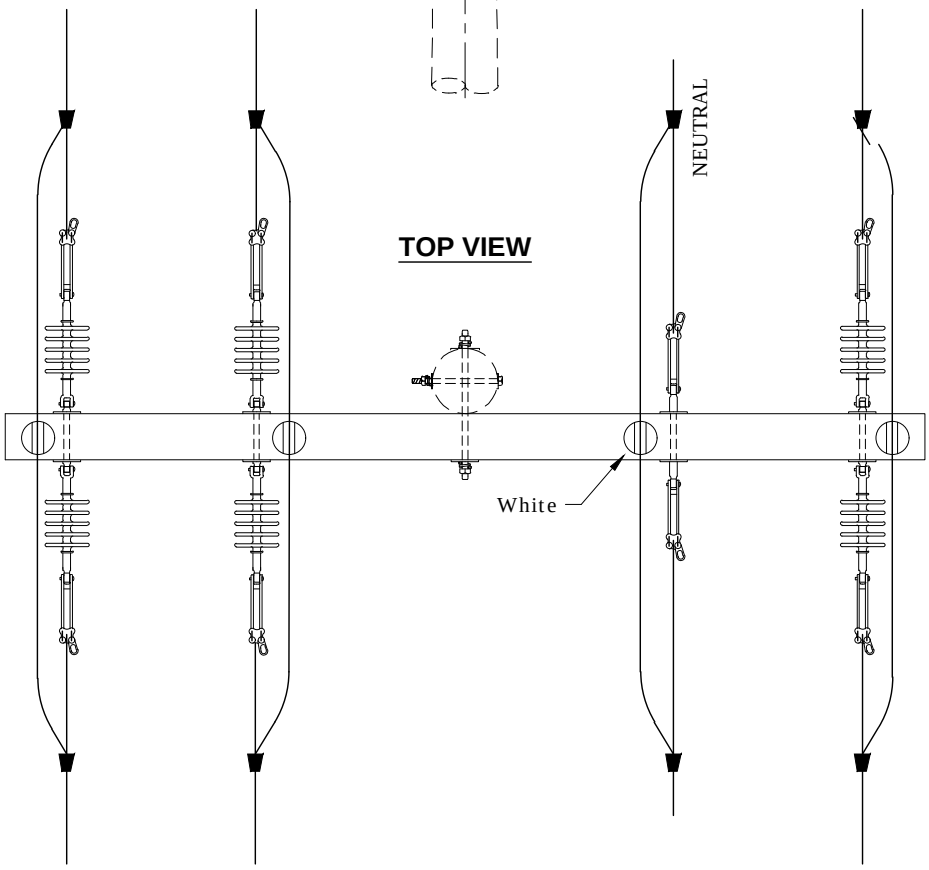

Notes:

1. This framing is for clearance limited situations only.
2. See Std AC - Avian Covers - Section 400 if needed. Covers and tree wire jumpers only required on center phase and phase on neutral side.

Rev. 5 - Eliminated porcelain pin insulators and added avian notes.

Clark Public Utilities

CONSTRUCTION STANDARDS

10' PRE-ASSEMBLED DOUBLE DEADEND
HIGH NEUTRAL
397 AAC MAX WIRE

REVISIONS

R	DATE	ENGR	OPS
2	3/02	REDRAWN	IN CAD
3	12/19/07	LB	AH
4	7/23/10	KJP	
5	12/4/17	CM	DK

PAGE: 1 of 3

C49B,C49BTREE

CAD FILE: C49B

APP: ELM

DATE: 1/31/80

SECTION 330

DEADEND FOR ANGLED SPANS

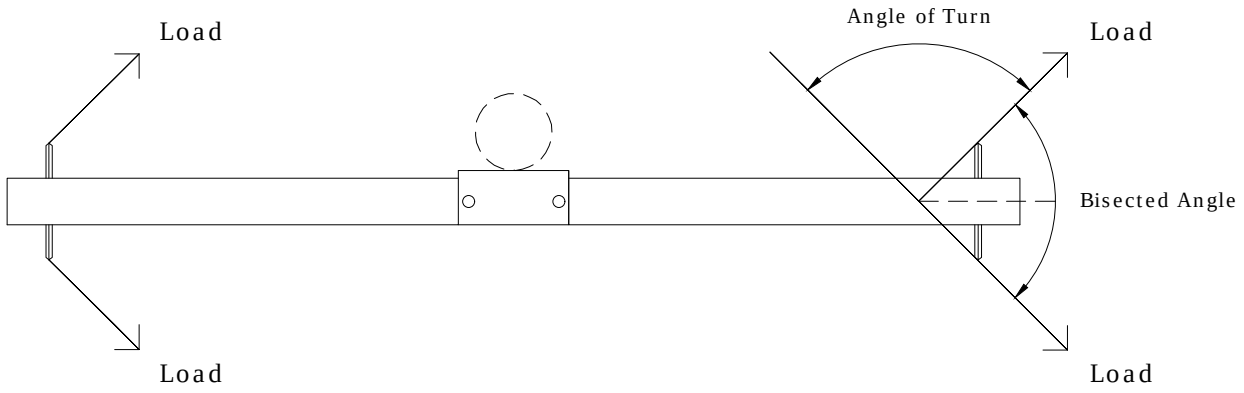

Notes:

1. Maximum angle with 397 is 60º, limited by the 3/4" machine bolt.
2. Angle must be bisected so that each eye-nut has half the angle.

Rev. 5 - Eliminated porcelain pin insulators and added avian notes.

Clark Public Utilities

CONSTRUCTION STANDARDS

10' PRE-ASSEMBLED DOUBLE DEADEND
HIGH NEUTRAL
397 AAC MAX WIRE

REVISIONS

R	DATE	ENGR	OPS
2	3/02	REDRAWN	IN CAD
3	12/19/07	LB	AH
4	7/23/10	KJP	
5	12/4/17	CM	DK

PAGE: 2 of 3

C49B,C49BTREE

CAD FILE: C49B

APP: ELM

DATE: 1/31/80

SECTION 330

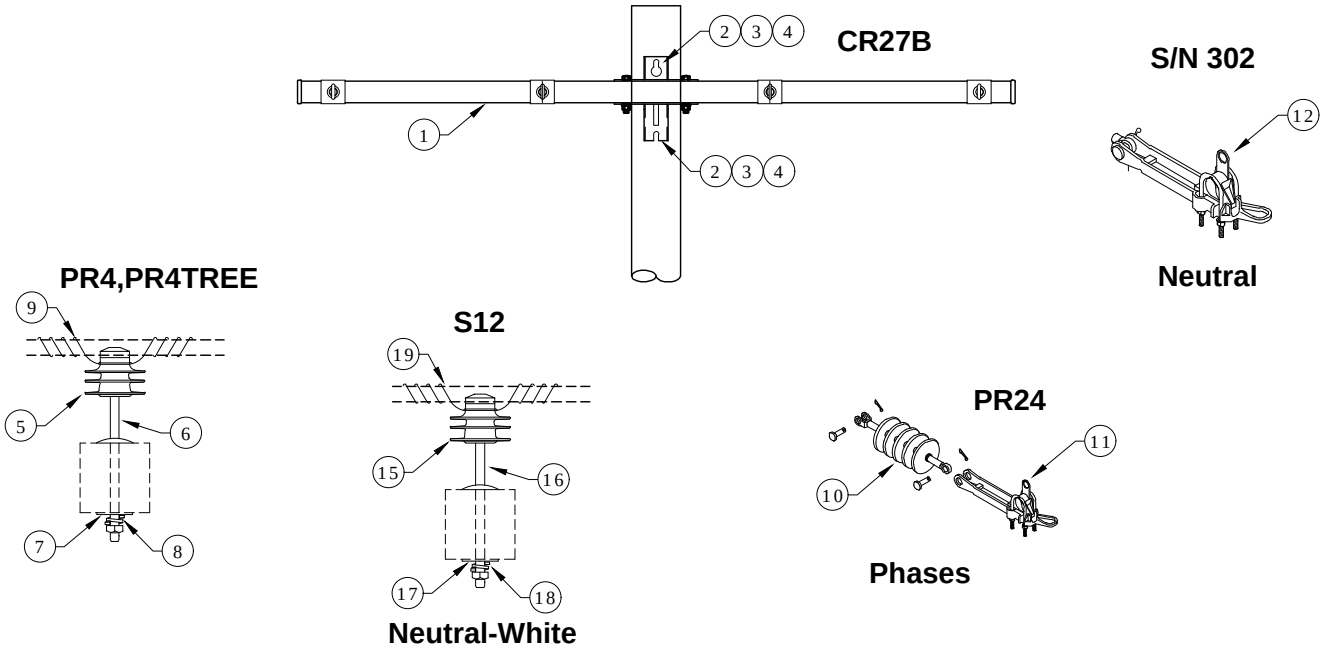

Rev. 5 - Eliminated porcelain pin insulators and added avian notes.

ITEM NO.	DESCRIPTION	C49BTREE CR27B ✲ QTY.	C49BTREE CR27B ✲ S/N	C49B CR27B ✲ QTY.	C49B CR27B ✲ S/N
1	Arm, Deadend Assembly, 10', 4-position, 397 Max	1	2555	1	2555
2	Bolt, Machine, 3/4" x 14", Galv., 18,350 lbs Ultimate Tensile	2	174	2	174
3	Washer, Lock, Spring, Double Coil, Galv., 3/4"	2	2218	2	2218
4	Washer, Curved, Square, Cast, 3" x 3" x 3/8" Thick x 13/16" Hole	2	1392	2	1392
ITEM NO.	**DESCRIPTION**	**PR4TREE (3) QTY.**	**PR4TREE (3) S/N**	**PR4 (3) QTY.**	**PR4 (3) S/N**
5	Insulator, Pin, C Neck, Polymer	3	1968	3	1968 ✲
6	Pin, Crossarm	3	961	3	961
7	Washer, Square, Flat, 5/8", 2 1/4" x 2 1/4"	3	1412	3	1412
8	Washer, Lock, Spring, Double Coil, Galv., 5/8"	3	2217	3	2217
9	Wire, Tie, AL Annealed #4 SD	33✲	3012	30	1421
ITEM NO.	**DESCRIPTION**	**PR24 (6) QTY.**	**PR24 (6) S/N**	**PR24 (6) QTY.**	**PR24 (6) S/N**
10	Insulator, Suspension, 15 kV Clevis-Tongue, Polymer Type	6	1967	6	1967
11	Clamp, Strain, Distribution, #2 to 397.5	6	302	6	302
ITEM NO.	**DESCRIPTION**	**Additional Material QTY.**	**Additional Material S/N**	**Additional Material QTY.**	**Additional Material S/N**
12	Clamp, Strain, Distribution, #2 - 397.5	2	302	2	302
13	Connector, Tap, Wedge, 397 to 397	6	2501	6	2501
14	Connector, Tap, Wedge, 2/0 to 2/0	2	2559	2	2559
ITEM NO.	**DESCRIPTION**	**S12 QTY.**	**S12 S/N**	**S12 QTY.**	**S12 S/N**
15	Insulator, Pin, C Neck, White, Polymer	1	2656	1	2656
16	Pin, Crossarm	1	961	1	961
17	Washer, Square Flat, 5/8", 2 1/4" x 2 1/4"	1	1412	1	1412
18	Washer, Lock, Spring, Double Coil, Galv., 5/8"	1	2217	1	2217
19	Wire, Tie, AL Annealed #4 SD	10	1421	10	1421

Clark Public Utilities

CONSTRUCTION STANDARDS

10' PRE-ASSEMBLED DOUBLE DEADEND
HIGH NEUTRAL
397 AAC MAX WIRE

REVISIONS

R	DATE	ENGR	OPS
2	3/02	REDRAWN	IN CAD
3	12/19/07	LB	AH
3	7/23/10	KJP	
5	12/4/17	CM	DK

PAGE: 3 of 3

C49B,C49BTREE

CAD FILE: C49B

APP: ELM
DATE: 1/31/80

SECTION 330

FRONT VIEW

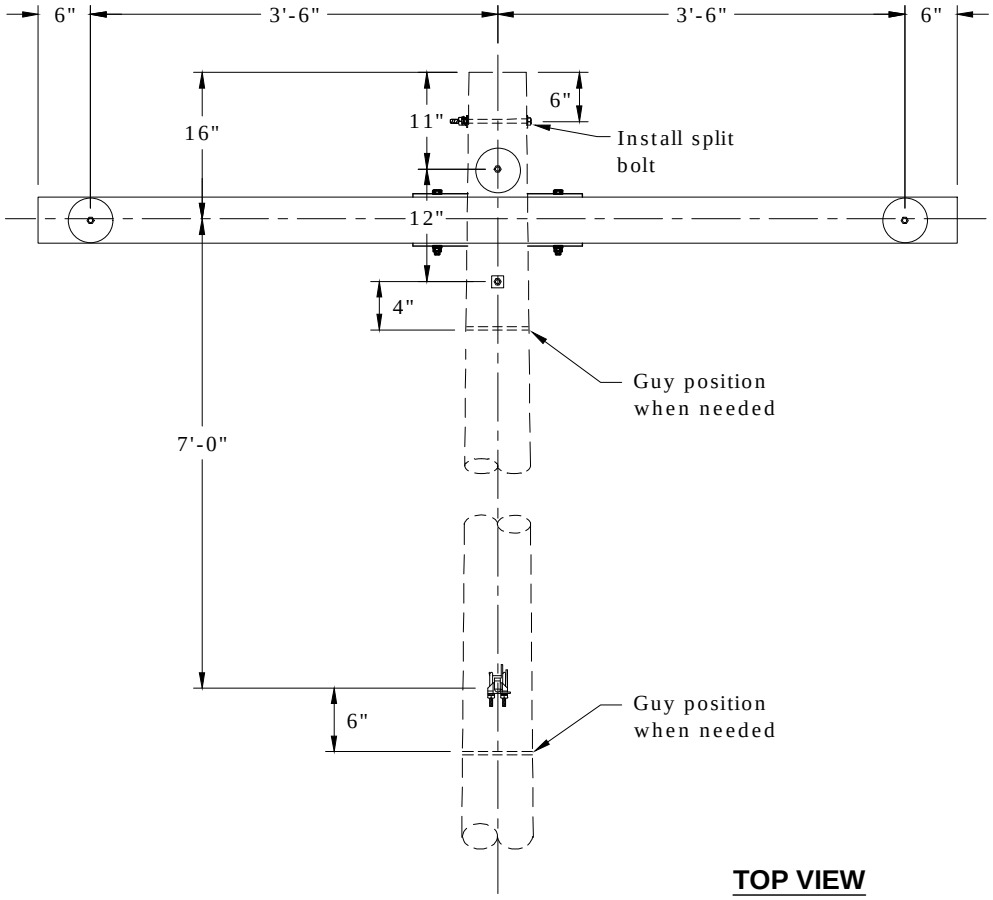

TOP VIEW

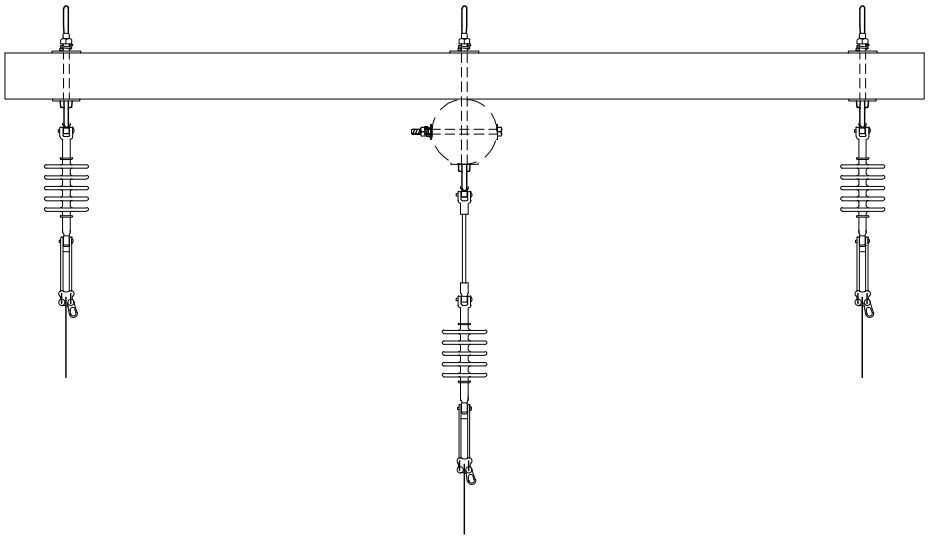

Avian Safe

Rev. 4 - Added avian note.

Clark Public Utilities

CONSTRUCTION STANDARDS

8' PRE-ASSEMBLED DEADEND
397 AAC MAX WIRE

REVISIONS

R	DATE	ENGR	OPS
1	2/11/81	GGW	
2	3/02	REDRAWN	IN CAD
3	12/19/07	LB	AH
4	12/4/17	CM	DK

PAGE:		CAD FILE:	APP: ELM	SECTION
1 of 2	C50A	C50A	DATE: 1/31/80	330

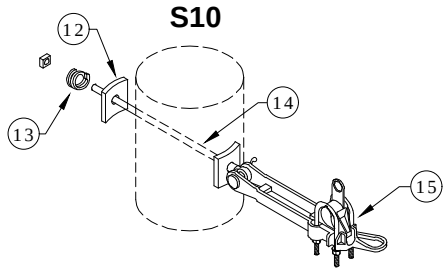

Neutral

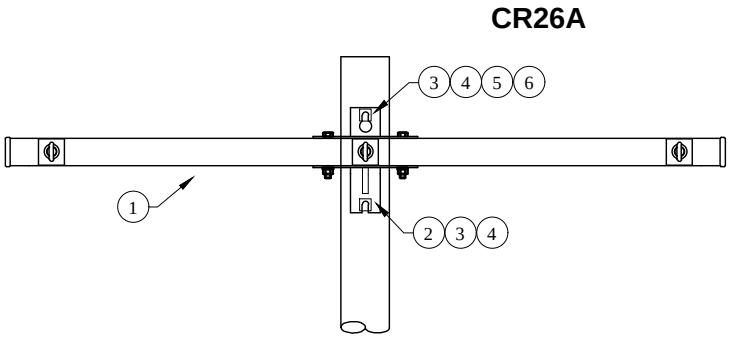

Back View

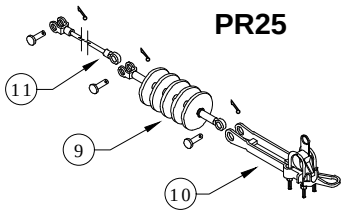

Center Phase

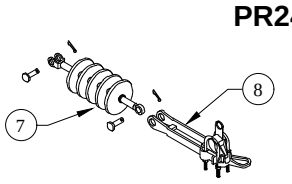

Road & Field Phases

Rev. 4 - Added avian note.

ITEM NO.	DESCRIPTION	C50A CR26A QTY.	S/N
1	Arm, Deadend Assembly, 8', 3-position, 397 Max	1	2508
2	Bolt, Machine, 3/4" x 14", Galv., 18,350 lbs Ultimate Tensile	1	174
3	Washer, Lock, Spring, Double Coil, Galv., 3/4"	2	2218
4	Washer, Curved, Square, Cast, 3" x 3" x 3/8" Thick x 13/16" Hole	2	1392
5	Nut, Eye Oval 3/4", Galv.	1	914
6	Bolt, Machine, 3/4" x 16", Galv., 18,350 lbs Ultimate Tensile	1	175
ITEM NO.	DESCRIPTION	PR24 (2) QTY.	S/N
7	Insulator, Suspension, 15 kV Clevis-Tongue, Polymer Type	2	1967
8	Clamp, Strain, Distribution, #2 to 397.5	2	302
ITEM NO.	DESCRIPTION	PR25 QTY.	S/N
9	Insulator, Suspension, 15 kV Clevis-Tongue, Polymer Type	1	1967
10	Clamp, Strain, Distribution, #2 to 397.5	1	302
11	Insulator, Guy Strain, Fiberglass, 20"	1	2909
ITEM NO.	DESCRIPTION	S10 QTY.	S/N
12	Washer, Curved, Square, Cast, 3" x 3" x 3/8" Thick x 13/16" Hole	2	1392
13	Washer, Lock, Spring, Double Coil, Galv., 5/8"	1	2217
14	Bolt, Eye, 5/8" x 14", Galv., 12,400 lbs Ultimate Tensile	1	108
15	Clamp, Strain, Distribution, #2 - 397.5	1	302

Clark Public Utilities

CONSTRUCTION STANDARDS

8' PRE-ASSEMBLED DEADEND
397 AAC MAX WIRE

REVISIONS

R	DATE	ENGR	OPS
1	2/11/81	GGW	
2	3/02	REDRAWN	IN CAD
3	12/19/07	LB	AH
4	12/4/17	CM	DK

PAGE: 2 of 2

C50A

CAD FILE: C50A

APP: ELM

DATE: 1/31/80

SECTION 330

FRONT VIEW

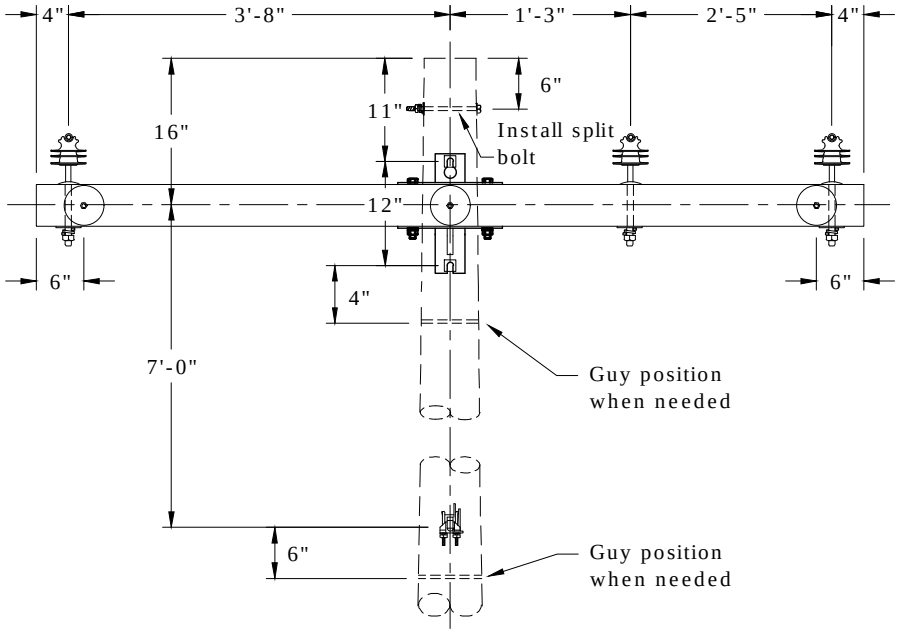

SIDE VIEW

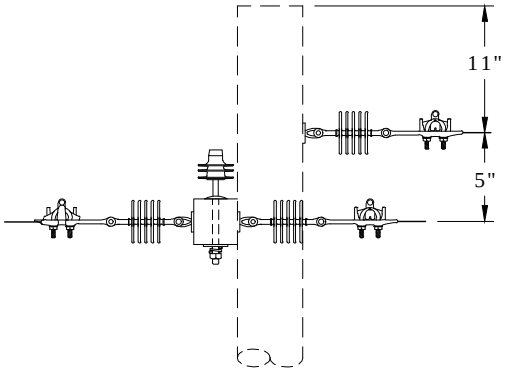

Note: See Std AC - Avian Covers - Section 400 if needed. Covers and tree wire jumper only required on center phase.

Rev. 4 - Eliminated porcelain pin insulators and added avian notes.

Clark Public Utilities

CONSTRUCTION STANDARDS

8' PRE-ASSEMBLED DOUBLE DEADEND
397 AAC MAX WIRE

REVISIONS

R	DATE	ENGR	OPS
1	2/11/81	GGW	
2	3/02	REDRAWN	IN CAD
3	12/19/07	LB	AH
4	12/4/17	CM	DK

PAGE: 1 of 4

C51A,C51ATREE

CAD FILE: C51A

APP: ELM

DATE: 1/31/80

SECTION 330

DEADEND FOR ANGLED SPANS

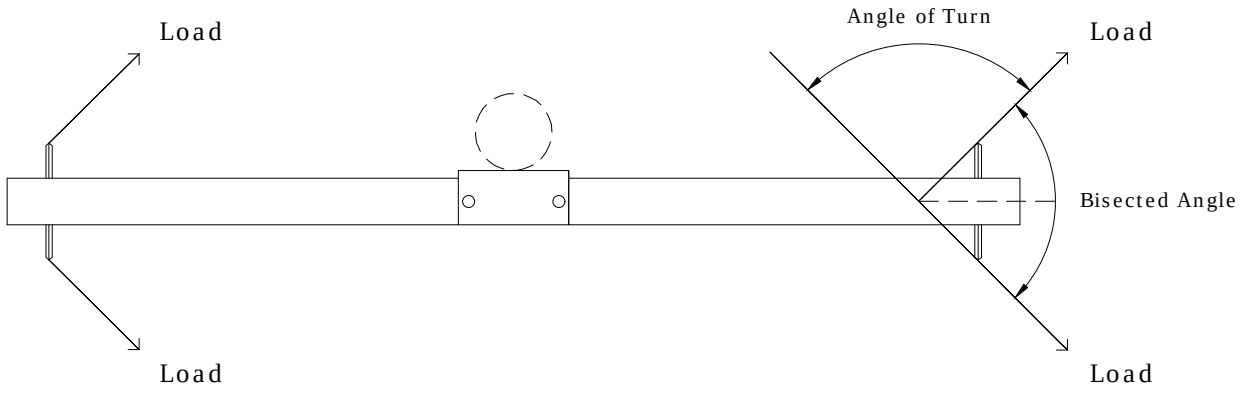

Notes:

1. Maximum angle with 397 is 60º, limited by the 3/4" machine bolt.
2. Angle must be bisected so that each eye-nut has half the angle.

Rev. 4 - Eliminated porcelain pin insulators and added avian notes.

Clark Public Utilities

CONSTRUCTION STANDARDS

8' PRE-ASSEMBLED DOUBLE DEADEND
397 AAC MAX WIRE

REVISIONS

R	DATE	ENGR	OPS
1	2/11/81	GGW	
2	3/02	REDRAWN	IN CAD
3	12/19/07	LB	AH
4	12/4/17	CM	DK

PAGE: 2 of 4

C51A,C51ATREE

CAD FILE: C51A

APP: ELM

DATE: 1/31/80

SECTION 330

TOP VIEW

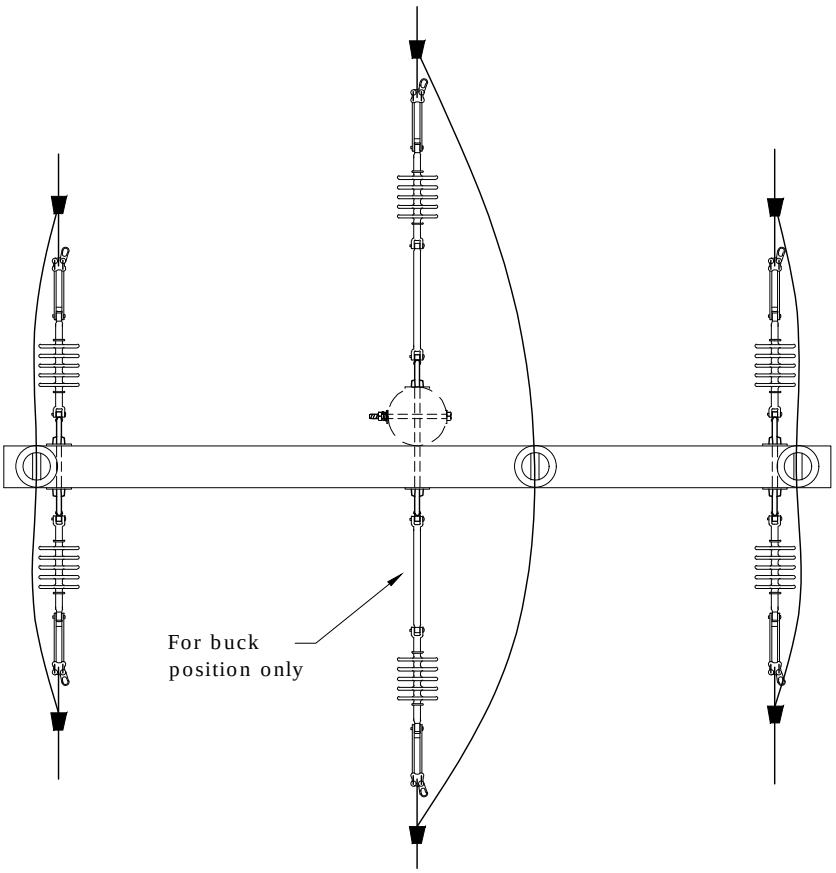

PR25

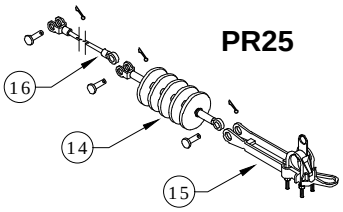

Center Phase

PR24

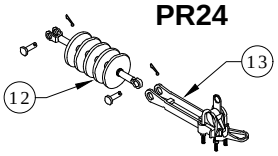

Road & Field Phases

S10

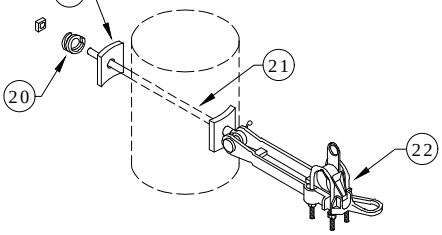

Neutral

S11

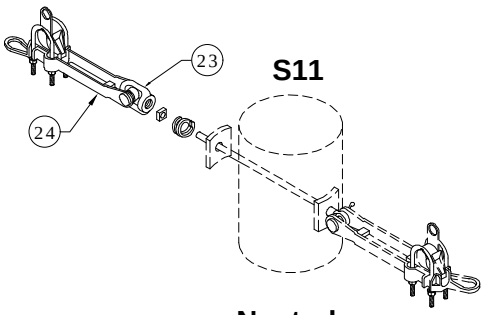

Neutral

Rev. 4 - Eliminated porcelain pin insulators and added avian notes.

Clark Public Utilities

CONSTRUCTION STANDARDS

8' PRE-ASSEMBLED DOUBLE DEADEND
397 AAC MAX WIRE

REVISIONS

R	DATE	ENGR	OPS
1	2/11/81	GGW	
2	3/02	REDRAWN	IN CAD
3	12/19/07	LB	AH
4	12/4/17	CM	DK

PAGE:		CAD FILE:	APP: ELM	SECTION
3 of 4	C51A,C51ATREE	C51A	DATE: 1/31/80	330

PR4,PR4TREE

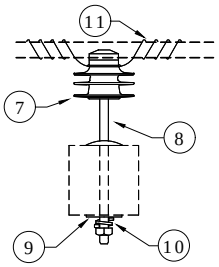

CR26A

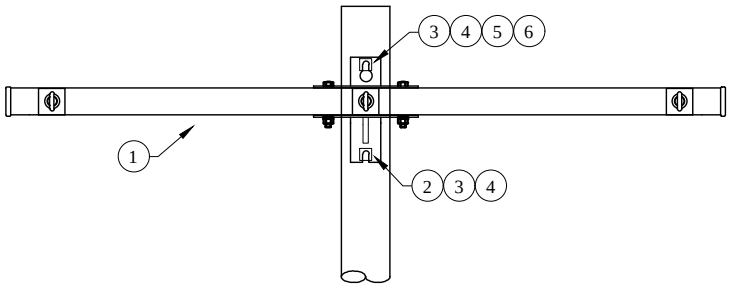

Front View

Rev. 4 - Eliminated porcelain pin insulators and added avian notes.

ITEM NO.	DESCRIPTION	C51ATREE CR26A QTY.	C51ATREE CR26A S/N	C51A CR26A QTY.	C51A CR26A S/N
1	Arm, Deadend Assembly, 8', 3-position, 397 Max	1	2508	1	2508
2	Bolt, Machine, 3/4" x 14", Galv., 18,350 lbs Ultimate Tensile	1	174	1	174
3	Washer, Lock, Spring, Double Coil, Galv., 3/4"	2	2218	2	2218
4	Washer, Curved, Square, Cast, 3" x 3" x 3/8" Thick x 13/16" Hole	2	1392	2	1392
5	Nut, Eye Oval 3/4"	1	914	1	914
6	Bolt, Machine, 3/4" x 16", Galv., 18,350 lbs Ultimate Tensile	1	175	1	175
ITEM NO.	DESCRIPTION	PR4TREE (3) QTY.	PR4TREE (3) S/N	PR4 (3) QTY.	PR4 (3) S/N
7	Insulator, Pin, C Neck, Polymer	3	1968	3	1968 ✲
8	Pin, Crossarm	3	961	3	961
9	Washer, Square, Flat, 5/8", 2 1/4" x 2 1/4"	3	1412	3	1412
10	Washer, Lock, Spring, Double Coil, Galv., 5/8"	3	2217	3	2217
11	Wire, Tie, AL Annealed #4 SD	33✲	3012	30	1421
ITEM NO.	DESCRIPTION	PR24 (4) QTY.	PR24 (4) S/N	PR24 (4) QTY.	PR24 (4) S/N
12	Insulator, Suspension, 15 kV Clevis-Tongue, Polymer Type	4	1967	4	1967
13	Clamp, Strain, Distribution, #2 to 397.5	4	302	4	302
ITEM NO.	DESCRIPTION	PR25 (2) QTY.	PR25 (2) S/N	PR25 (2) QTY.	PR25 (2) S/N
14	Insulator, Suspension, 15 kV Clevis-Tongue, Polymer Type	2	1967	2	1967
15	Clamp, Strain, Distribution, #2 to 397.5	2	302	2	302
16	Insulator, Guy Strain, Fiberglass 20"	2	2909	2	2909
ITEM NO.	DESCRIPTION	Additional Material QTY.	Additional Material S/N	Additional Material QTY.	Additional Material S/N
17	Connector, Tap, Wedge, 397 to 397	6	2501	6	2501
18	Connector, Tap, Wedge, 2/0 to 2/0	2	2559	2	2559
ITEM NO.	DESCRIPTION	S10 QTY.	S10 S/N	S10 QTY.	S10 S/N
19	Washer, Curved, Square, Cast, 3" x 3" x 3/8" Thick x 13/16" Hole	2	1392	2	1392
20	Washer, Lock, Spring, Double Coil, Galv., 5/8"	1	2217	1	2217
21	Bolt, Eye, 5/8" x 14", Galv., 12,400 lbs Ultimate Tensile	1	108	1	108
22	Clamp, Strain, Distribution, #2 - 397.5	1	302	1	302
ITEM NO.	DESCRIPTION	S11 QTY.	S11 S/N	S11 QTY.	S11 S/N
23	Nut, Eye Oval 5/8"	1	913	1	913
24	Clamp, Strain, Distribution, #2 - 397.5	1	302	1	302

Clark Public Utilities

CONSTRUCTION STANDARDS

8' PRE-ASSEMBLED DOUBLE DEADEND
397 AAC MAX WIRE

REVISIONS

R	DATE	ENGR	OPS
1	2/11/81	GGW	
2	3/02	REDRAWN	IN CAD
3	12/19/07	LB	AH
4	12/4/17	CM	DK

PAGE: 4 of 4

C51A,C51ATREE

CAD FILE: C51A

APP: ELM

DATE: 1/31/80

SECTION 330

FRONT VIEW

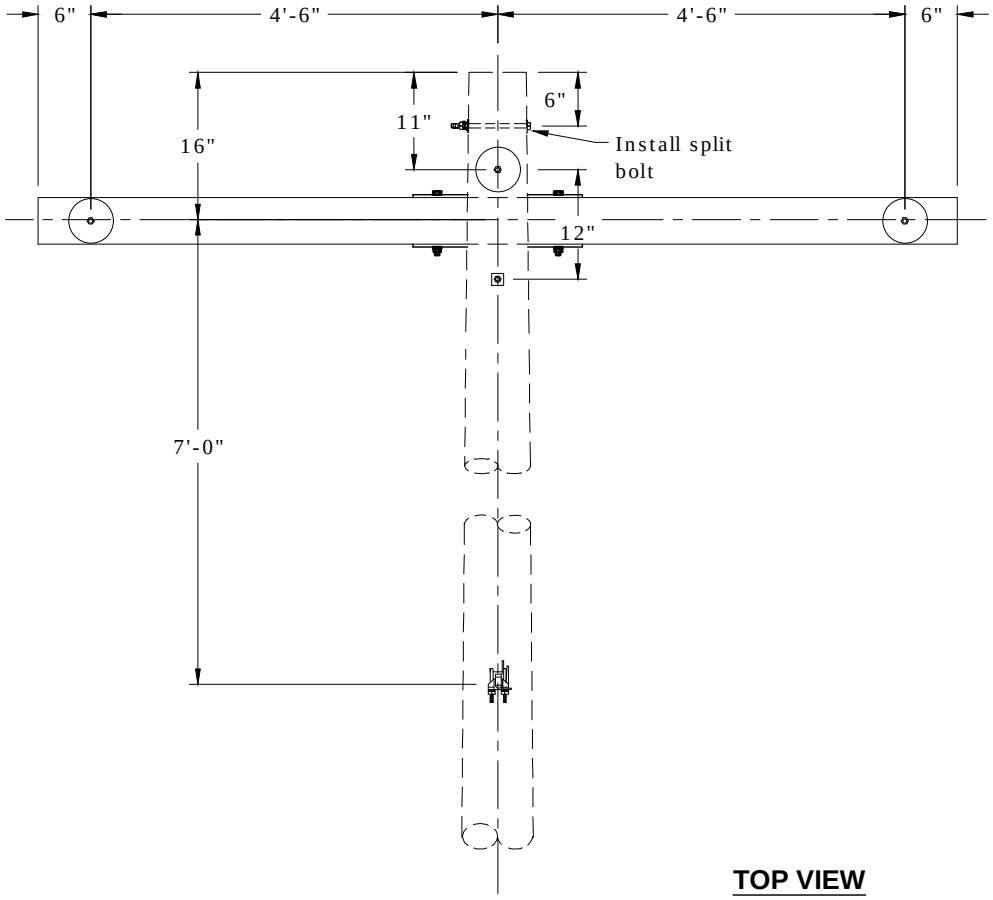

TOP VIEW

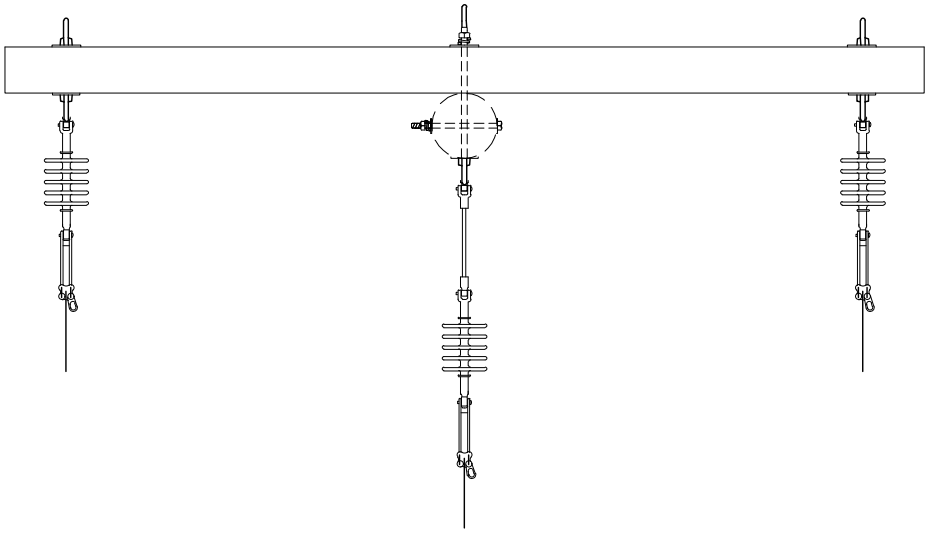

Avian Safe

Rev. 4 - Added avian note.

Clark Public Utilities

CONSTRUCTION STANDARDS

10' PRE-ASSEMBLED DEADEND
397 AAC MAX WIRE

REVISIONS

R	DATE	ENGR	OPS
1	2/11/81	GGW	
2	3/02	REDRAWN	IN CAD
3	12/19/07	LB	AH
4	12/4/17	CM	DK

PAGE:		CAD FILE:	APP: ELM	SECTION
1 of 2	C52B	C52B	DATE: 1/31/80	330

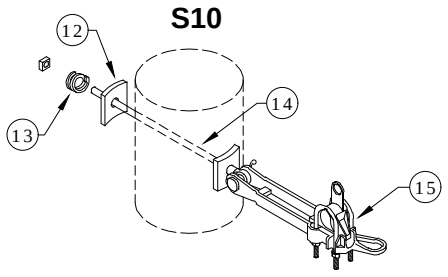

Neutral

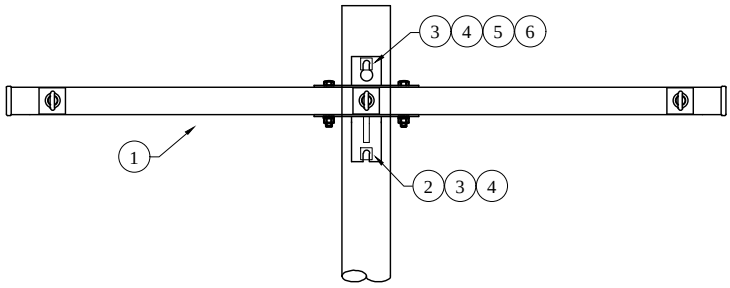

Back View

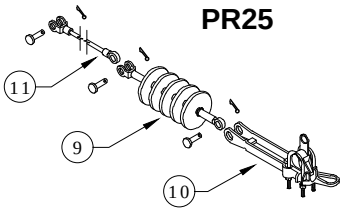

Center Phase

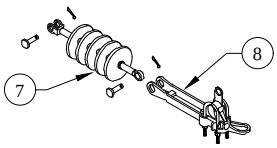

Road & Field Phases

Rev. 4 - Added avian note.

ITEM NO.	DESCRIPTION	C52B CR26B QTY.	S/N
1	Arm, Deadend Assembly, 3-position, 397 Max	1	2680
2	Bolt, Machine, 3/4" x 14", Galv., 18,350 lbs Ultimate Tensile	1	174
3	Washer, Lock, Spring, Double Coil, Galv., 3/4"	2	2218
4	Washer, Curved, Square, Cast, 3" x 3" x 3/8" Thick x 13/16" Hole	2	1392
5	Nut, Eye Oval 3/4"	1	914
6	Bolt, Machine, 3/4" x 16", Galv., 18,350 lbs Ultimate Tensile	1	175
ITEM NO.	DESCRIPTION	PR24 (2) QTY.	S/N
7	Insulator, Suspension, 15 KV Clevis-Tongue, Polymer Type	2	1967
8	Clamp, Strain, Distribution, #2 - 397.5	2	302
ITEM NO.	DESCRIPTION	PR25 QTY.	S/N
9	Insulator, Suspension, 15 kV Clevis-Tongue, Polymer Type	1	1967
10	Clamp, Strain, Distribution, #2 to 397.5 MCM	1	302
11	Insulator, Guy Strain, Fiberglass, 20"	1	2909
ITEM NO.	DESCRIPTION	S10 QTY.	S/N
12	Washer, Curved, Square, Cast, 3" x 3" x 3/8" Thick x 13/16" Hole	2	1392
13	Washer, Lock, Spring, Double Coil, Galv., 5/8"	1	2217
14	Bolt, Eye, 5/8" x 14", Galv., 12,400 lbs Ultimate Tensile	1	108
15	Clamp, Strain, Distribution, #2 - 397.5 KCM	1	302

Clark Public Utilities

CONSTRUCTION STANDARDS

10' PRE-ASSEMBLED DEADEND
397 AAC MAX WIRE

REVISIONS

R	DATE	ENGR	OPS
1	2/11/81	GGW	
2	3/02	REDRAWN	IN CAD
3	12/19/07	LB	AH
4	12/4/17	CM	DK

PAGE: 2 of 2

C52B

CAD FILE: C52B

APP: ELM

DATE: 1/31/80

SECTION 330

FRONT VIEW

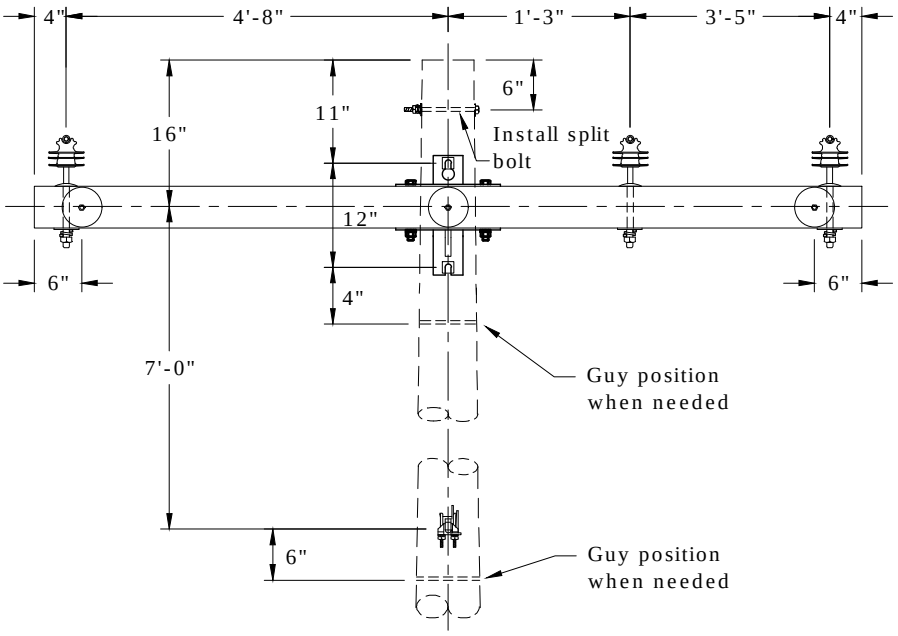

TOP VIEW

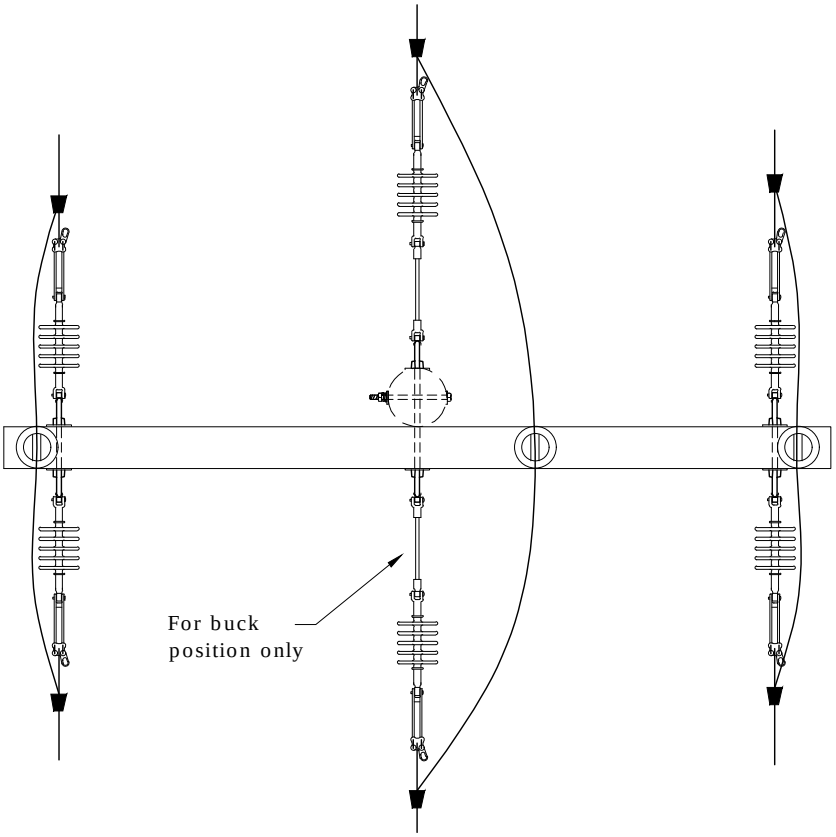

Note: See Std AC - Avian Covers - Section 400 if needed. Covers and tree wire jumper only required on center phase.

Rev. 1 - Eliminated porcelain pin insulators and added avian note.

Clark Public Utilities

CONSTRUCTION STANDARDS

10' PRE-ASSEMBLED DOUBLE DEADEND
397 AAC MAX WIRE

REVISIONS

R	DATE	ENGR	OPS
1	12/4/17	CM	DK

PAGE: 1 of 4

C53B,C53BTREE

CAD FILE: C53B

APP: LB/AH
DATE: 12/19/07

SECTION 330

DEADEND FOR ANGLED SPANS

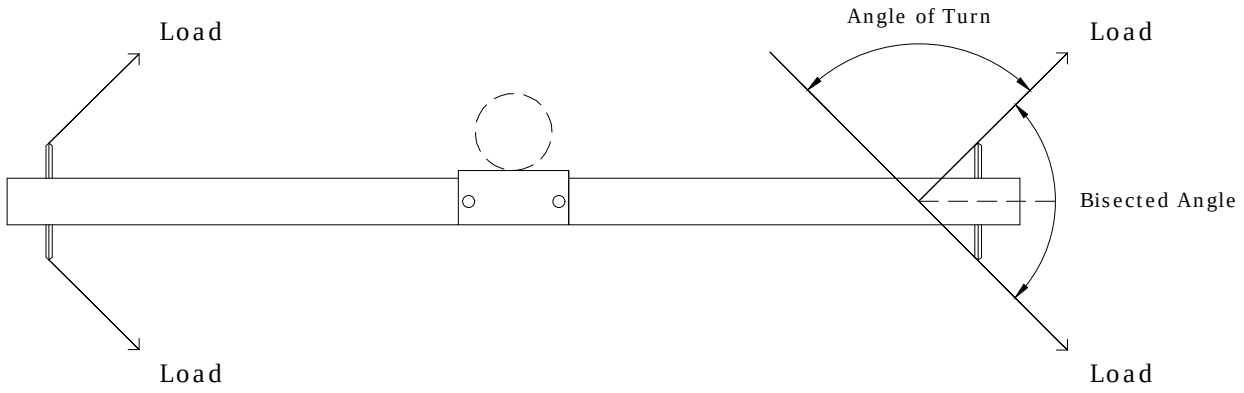

Notes:

1. Maximum angle with 397 is 60º, limited by the 3/4" machine bolt.
2. Angle must be bisected so that each eye-nut has half the angle.

Rev. 1 - Eliminated porcelain pin insulators and added avian note.

Clark Public Utilities

CONSTRUCTION STANDARDS

10' PRE-ASSEMBLED DOUBLE DEADEND
397 AAC MAX WIRE

REVISIONS

R	DATE	ENGR	OPS
1	12/4/17	CM	DK

PAGE: 2 of 4

C53B,C53BTREE

CAD FILE: C53B

APP: LB/AH
DATE: 12/19/07

SECTION 330

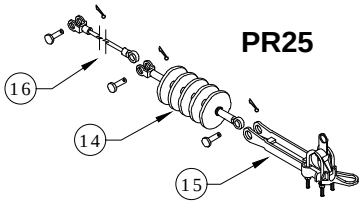

Center Phase

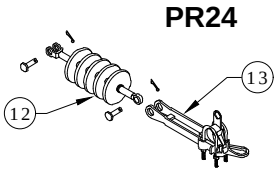

Road & Field Phases

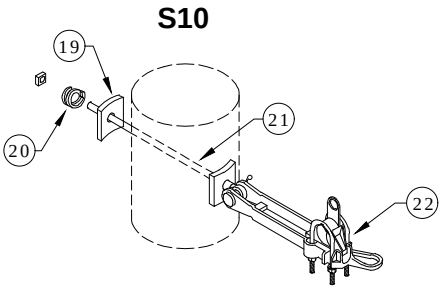

Neutral

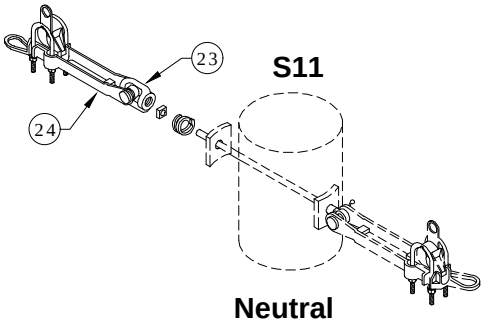

Neutral

PR4,PR4TREE

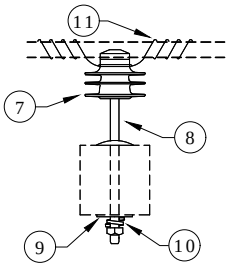

CR26B

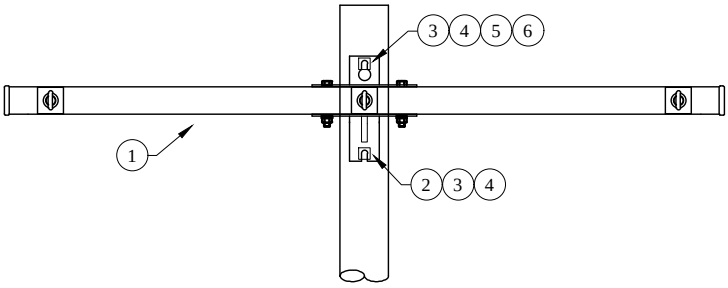

Rev. 1 - Eliminated porcelain pin insulators and added avian note.

Clark Public Utilities

CONSTRUCTION STANDARDS

10' PRE-ASSEMBLED DOUBLE DEADEND
397 AAC MAX WIRE

REVISIONS

R	DATE	ENGR	OPS
1	12/4/17	CM	DK

PAGE: 3 of 4

C53B,C53BTREE

CAD FILE: C53B

APP: LB/AH
DATE: 12/19/07

SECTION 330

Rev. 1 - Eliminated porcelain pin insulators and added avian note.

ITEM NO.	DESCRIPTION	C53BTREE CR26B QTY.	C53BTREE CR26B S/N	C53B CR26B QTY.	C53B CR26B S/N
1	Arm, Deadend Assembly, 3-Position, 397 Max	1	2680	1	2680
2	Bolt, Machine, 3/4" x 14", Galv., 18,350 lbs Ultimate Tensile	1	174	1	174
3	Washer, Lock, Spring, Double Coil, Galv., 3/4"	2	2218	2	2218
4	Washer, Curved, Square, Cast, 3" x 3" x 3/8" Thick x 13/16" Hole	2	1392	2	1392
5	Nut, Eye Oval 3/4"	1	914	1	914 ✲
6	Bolt, Machine, 3/4" x 16" Galv., 18,350 lbs Ultimate Tensile	1	175	1	175
ITEM NO.	DESCRIPTION	PR4TREE (3) QTY.	PR4TREE (3) S/N	PR4 (3) QTY.	PR4 (3) S/N
7	Insulator, Pin, C Neck, Polymer	3	1968	3	1968
8	Pin, Crossarm	3	961	3	961
9	Washer, Square, Flat, 5/8", 2 1/4" x 2 1/4"	3	1412	3	1412
10	Washer, Lock, Spring, Double Coil, Galv., 5/8"	3	2217	3	2217
11	Wire, Tie, AL Annealed #4 SD	33✲	3012	30	1421
ITEM NO.	DESCRIPTION	PR24 (4) QTY.	PR24 (4) S/N	PR24(4) QTY.	PR24(4) S/N
12	Insulator, Suspension, 15 KV Clevis-Tongue, Polymer Type	4	1967	4	1967
13	Clamp, Strain, Distribution, #2 - 397.5	4	302	4	302
ITEM NO.	DESCRIPTION	PR25 (2) QTY.	PR25 (2) S/N	PR25 (2) QTY.	PR25 (2) S/N
14	Insulator, Suspension, 15 kV Clevis	2	1967	2	1967
15	Clamp, Strain, Distribution, #2 to 397.5	2	302	2	302
16	Insulator, Guy Strain, Fiberglass, 20"	2	2909	2	2909
ITEM NO.	DESCRIPTION	Additional Material QTY.	Additional Material S/N	Additional Material QTY.	Additional Material S/N
17	Connector, Tap, Wedge, 397 to 397	6	2501	6	2501
18	Connector, Tap, Wedge, 2/0 to 2/0	2	2559	2	2559
ITEM NO.	DESCRIPTION	S10 QTY.	S10 S/N	S10 QTY.	S10 S/N
19	Washer, Curved, Square, Cast, 3" x 3" x 3/8" Thick x 13/16" Hole	2	1392	2	1392
20	Washer, Lock, Spring, Double Coil, Galv. 5/8"	1	2217	1	2217
21	Bolt, Eye, 5/8" x 14", Galv., 12,400 lbs Ultimate Tensile	1	108	1	108
22	Clamp, Strain, Distribution, #2 - 397.5	1	302	1	302
ITEM NO.	DESCRIPTION	S11 QTY.	S11 S/N	S11 QTY.	S11 S/N
23	Nut, Eye Oval 5/8"	1	913	1	913
24	Clamp, Strain, Distribution, #2 - 397.5	1	302	1	302

Clark Public Utilities

CONSTRUCTION STANDARDS

10' PRE-ASSEMBLED DOUBLE DEADEND
397 AAC MAX WIRE

REVISIONS

R	DATE	ENGR	OPS
1	12/4/17	CM	DK

PAGE: 4 of 4

C53B,C53BTREE

CAD FILE: C53B

APP: LB/AH
DATE: 12/19/07

SECTION 330

340
3Ø Heavy Distribution
795MCM AAC & 336 MCM ACSR

2/11/2025

C	D1B	3Ø Single 10' Crossarm - 0° to 5°
C	D2B	3Ø Double 10' Crossarm - 6° to 15°
C	D3B	3Ø Double 10' Crossarm w/ Angle Vise-Tops - 16° to 30°
C	D4B	3Ø Single 10' Crossarm - High Neutral - 0° to 5°
C	D5B	3Ø Double 10' Crossarm - High Neutral - 6° to 15°
C	D6B	3Ø Double 10' Crossarm w/ Angle Vise-Tops - High Neutral, 16° to 30°
C	D7A	3Ø Single 8' Crossarm w/ Pole Top - 0° to 5°
C	D8A	3Ø Double 8' Crossarm w/ Double Pole Top - 6° to 15°
~	D10	3Ø Twiggy - 0° to 5°
~	D11	3Ø Twiggy - 6° to 15°
~	D13	3Ø Vertical w/ Pole Top - 0° to 5°
~	D14	3Ø Vertical w/ Double Pole Top - 6° to 15°
~	D16	3Ø Double Twiggy Circuit - 0° to 5°
~	D17	3Ø Double Twiggy Circuit - 6° to 15°
C	D19B	3Ø Single 10' Crossarm - Double Circuit - 0° to 5°
C	D20B	3Ø Double 10' Crossarm - Double Circuit - 6° to 15°
~	D22	3Ø Twiggy Transmission Underbuild – 0° to 5°
~	D23	3Ø Twiggy Transmission Underbuild – 6° to 15°
~	D48B	10' Pre-assembled Deadend - High Neutral
~	D49B	10' Pre-assembled Double Deadend - High Neutral
~	D50A	8' Pre-assembled Deadend
~	D51A	8' Pre-assembled Double Deadend

N New Standard
R Redrawn Standard
C Changed Standard
~ No Change

340 (CONTINUED)
3Ø HEAVY DISTRIBUTION
795MCM AAC & 336 MCM ACSR

2/11/2025

~	D52B	10' Pre-assembled Deadend
~	D53B	10' Pre-assembled Double Deadend

N New Standard
R Redrawn Standard
C Changed Standard
~ No Change

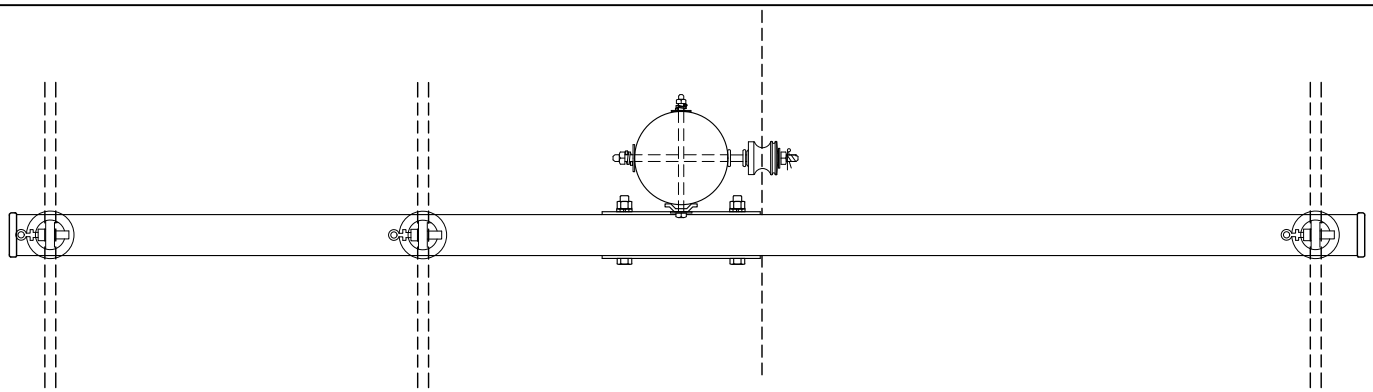

Vise-Top Notes:

- Tighten the bottom bolt until ring breaks off then, tighten the top bolt until ring breaks off
- Remove bolts with socket stick
- Do not reuse bolts after rings have broken off
- Replacement bolts are S/N 2888

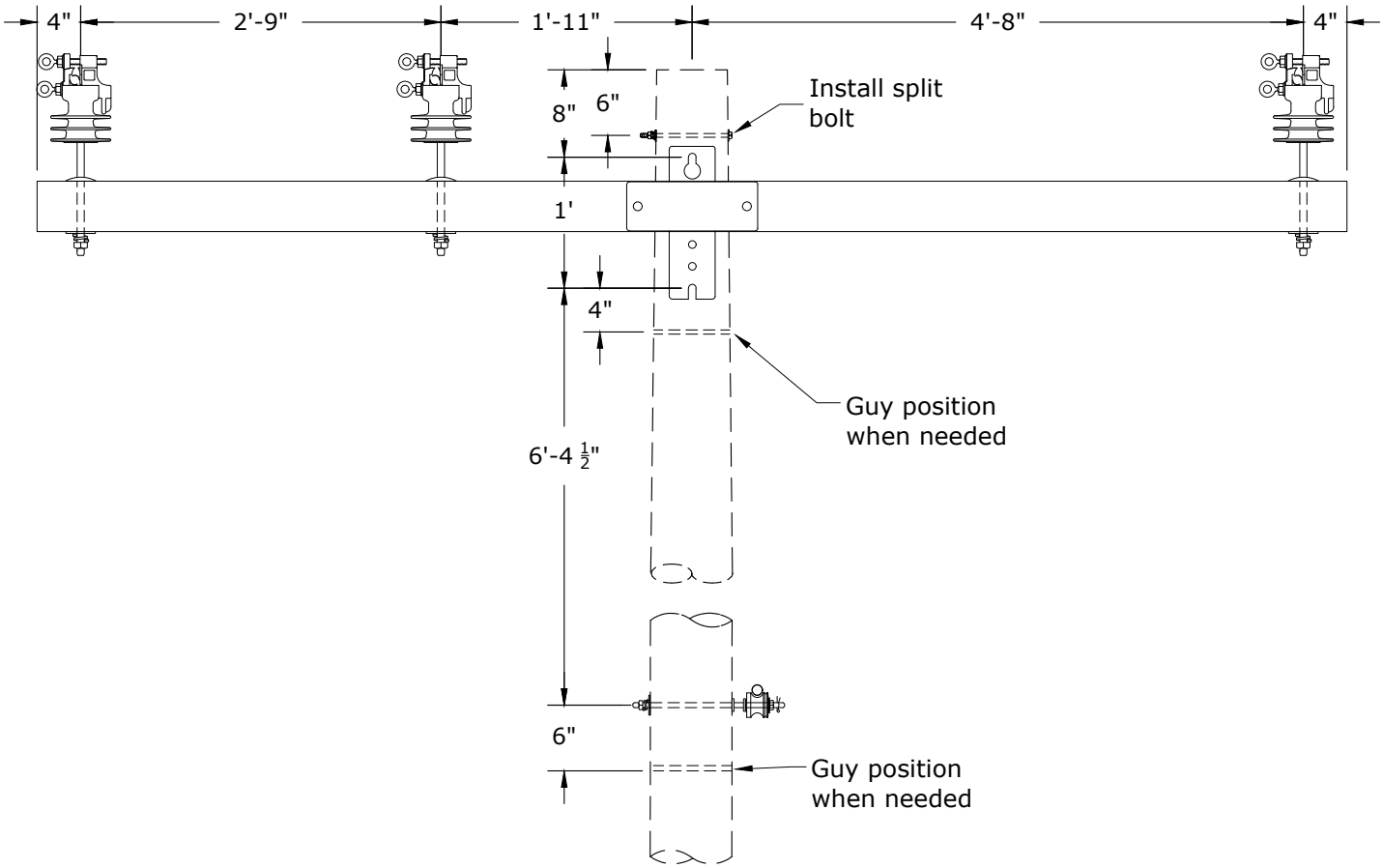

Notes:

1. Maximum line angle calculated for 5,000 lb MWT and 250-ft ruling span.
2. Std D7A is preferred for crossarm construction. Use this standard for underbuild or other special installations.
3. See Std AC - Avian Covers - Section 400 if needed. Covers only required on center phase.

Rev. 4 - Changed to fiberglass crossarm.

Clark Public Utilities

CONSTRUCTION STANDARDS

3Ø SINGLE 10' CROSSARM
0° TO 5°
795 AAC MAX WIRE

REVISIONS

R	DATE	ENGR	OPS
1	3/02	REDRAWN	IN CAD
2	6/7/06	LB	AH
3	1/4/18	CM	DK
4	2/11/25	CM	GM

PAGE:		CAD FILE:	APP: ELM	SECTION
1 of 2	D1B	D1B	DATE: 1/31/80	340

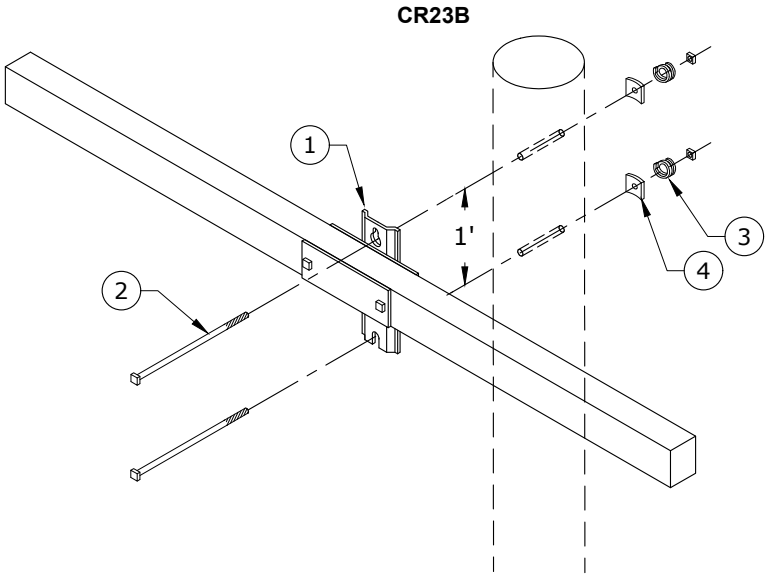

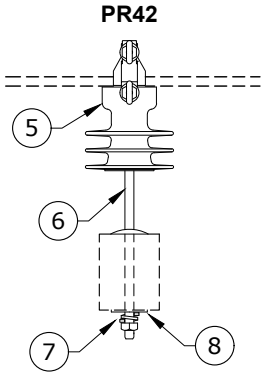

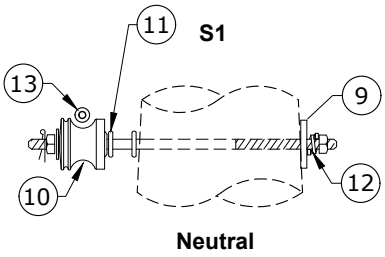

Rev. 4 - Changed to fiberglass crossarm.

ITEM NO	DESCRIPTION	D1B CR23B ✡ QTY	S/N
1	Crossarm, Distribution, Fiberglass, 10' Long x 3-5/8" Wide x 4-5/8" High	1	3031
2	Bolt, Machine, 5/8" x 14", Galv, 12,400 lb Ultimate Tensile	2	156
3	Washer, Lock, Spring, Double Coil, Galv, 5/8"	2	2217
4	Washer, Curved, Square, Cast, 3" x 3" x 3/8" Thick x 13/16" Hole	2	1392
ITEM NO	**DESCRIPTION**	**PR42 (3) QTY**	**S/N**
5	Insulator, Vise-Top, Polymer	3	2439
6	Pin, Crossarm	3	961
7	Washer, Lock, Spring, Double Coil, Galv, 5/8"	3	2217
8	Washer, Square, Flat, 5/8", 2 1/4" x 2 1/4"	3	1412
ITEM NO	**DESCRIPTION**	**S1 QTY**	**S/N**
9	Washer, Curved, Square, Cast, 3" x 3" x 3/8" Thick x 13/16" Hole	1	1392
10	Insulator, Spool, Clevis, Small, ANSI 53-2 Class	1	773
11	Bolt, Double Upset, 5/8" x 14", Galv, 12,400 lb Ultimate Tensile	1	1580
12	Washer, Lock, Spring, Double Coil, Galv, 5/8"	1	2217
13	Wire, Tie, AL Annealed #4 SD	10	1421

Clark Public Utilities

CONSTRUCTION STANDARDS

3Ø SINGLE 10' CROSSARM
0° TO 5°
795 AAC MAX WIRE

REVISIONS

R	DATE	ENGR	OPS
1	3/02	REDRAWN	IN CAD
2	6/7/06	LB	AH
3	1/4/18	CM	DK
4	2/11/25	CM	GM

PAGE: 2 of 2

D1B

CAD FILE: D1B

APP: ELM

DATE: 1/31/80

SECTION 340

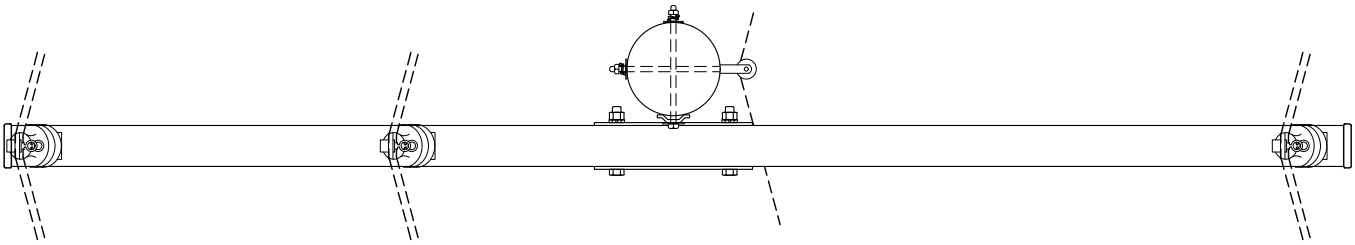

Vise-Top Notes:

- Tighten the bottom bolt until ring breaks off then, tighten the top bolt until ring breaks off
- Remove bolts with socket stick
- Do not reuse bolts after rings have broken off
- Replacement bolts are S/N 2888

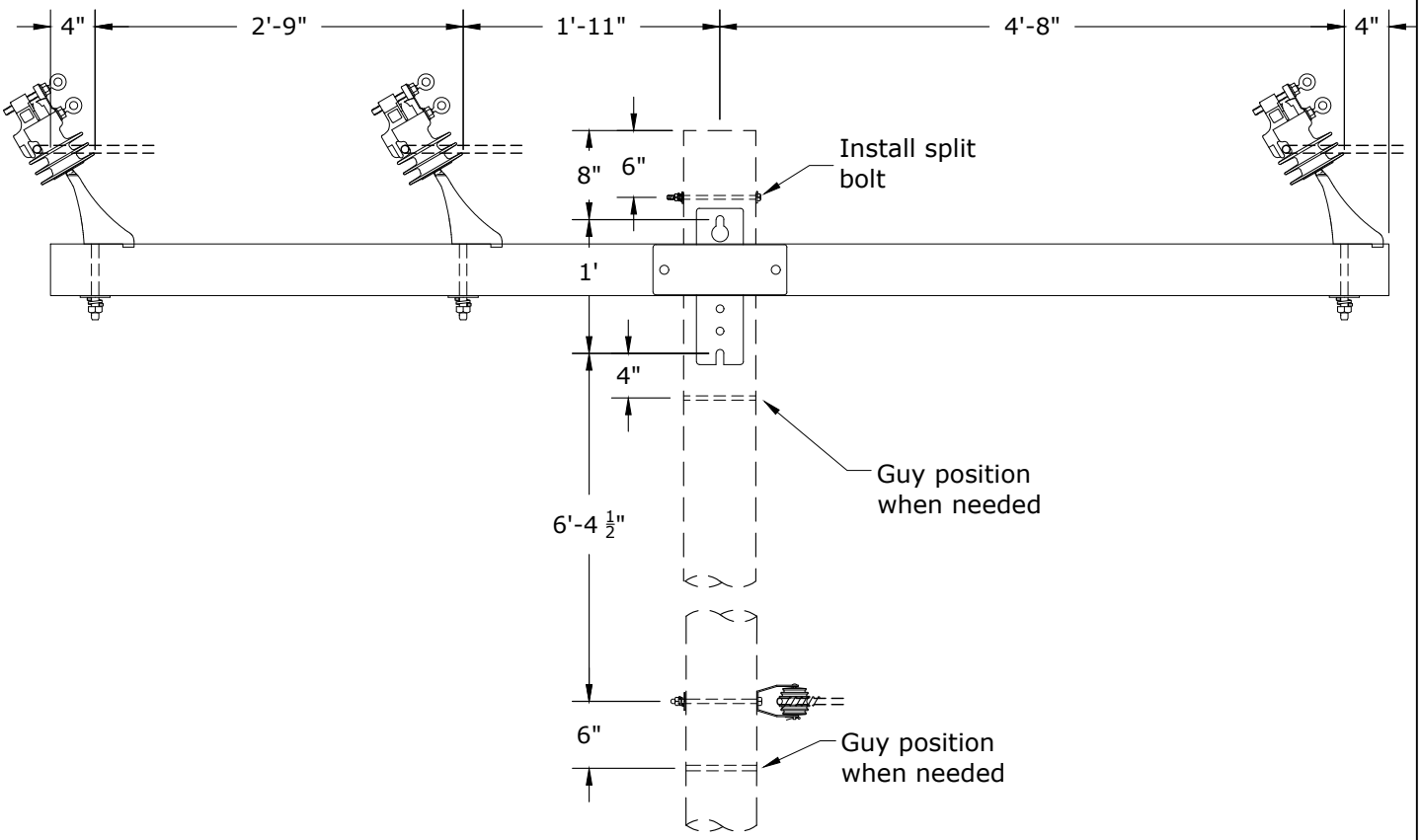

Notes:

1. Maximum line angle calculated for 5,000 lb MWT and 250-ft ruling span.
2. Std D8A is preferred for crossarm construction. Use this standard for underbuild or other special installations.
3. See Std AC - Avian Covers - Section 400 if needed. Covers only required on center phase.

Rev. 4 - Changed to single fiberglass crossarm with angle pins and reduced angle range.

Clark Public Utilities

CONSTRUCTION STANDARDS

3Ø SINGLE 10' CROSSARM
6° TO 10°✲
795 AAC MAX WIRE

REVISIONS

R	DATE	ENGR	OPS
1	3/02	REDRAWN	IN CAD
2	6/7/06	LB	AH
3	1/4/18	CM	DK
4	2/11/25	CM	GM

PAGE:		CAD FILE:	APP: ELM	SECTION
1 of 2	D2B	D2B	DATE: 1/31/80	340

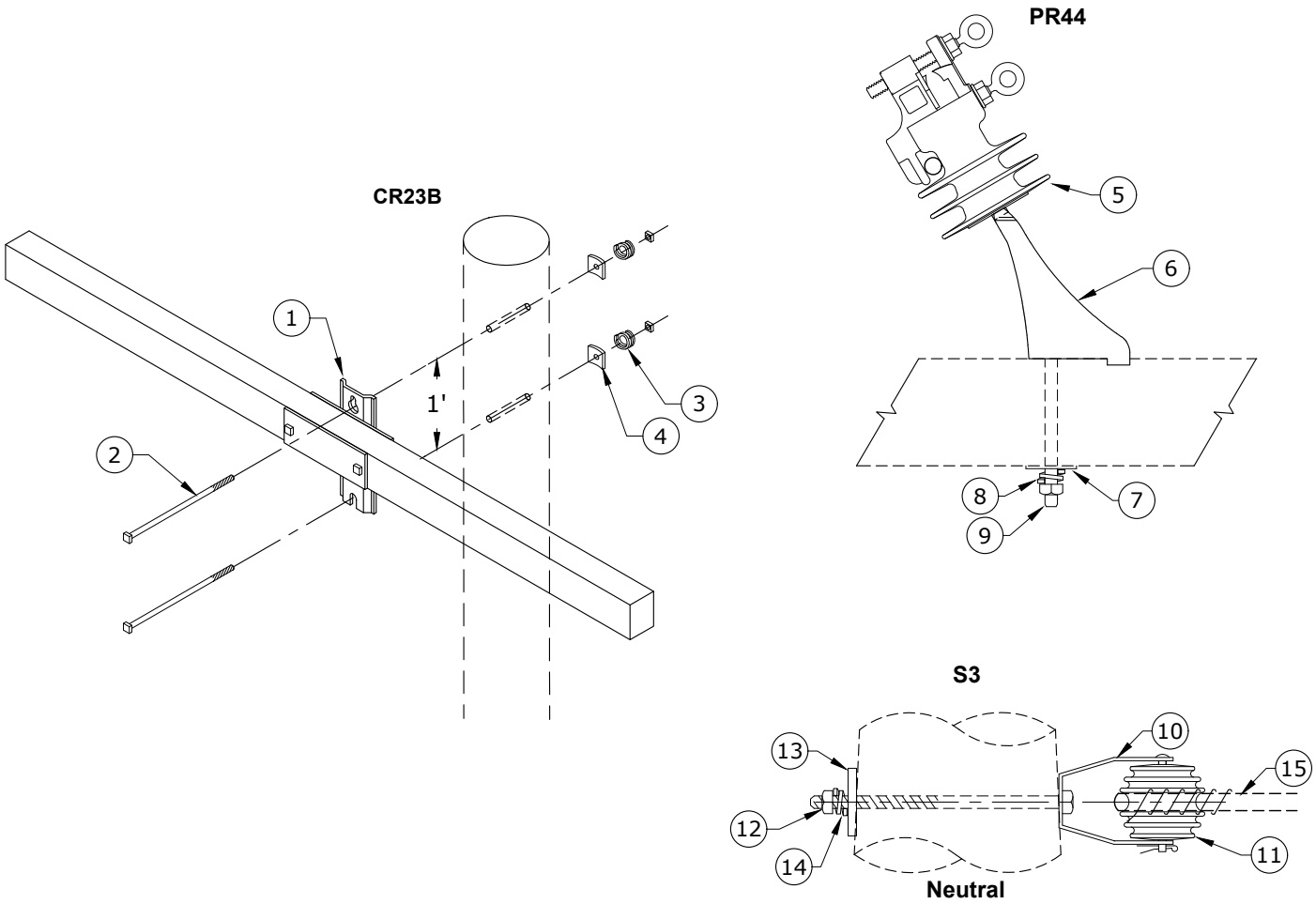

Rev. 4 - Changed to single fiberglass crossarm with angle pins and reduced angle range.

ITEM NO	DESCRIPTION	D2B CR23B ✲ QTY	S/N
1	Crossarm, Distribution, Fiberglass, 10' Long x 3-5/8" Wide x 4-5/8" High	1	3031
2	Bolt, Machine, 5/8" x 14", Galv, 12,400 lb Ultimate Tensile	2	156
3	Washer, Lock, Spring, Double Coil, Galv, 5/8"	2	2217
4	Washer, Curved, Square, Cast, 3" x 3" x 3/8" Thick x 13/16" Hole	2	1392
ITEM NO	**DESCRIPTION**	**PR44 (3) QTY**	**S/N**
5	Insulator, Vise-Top, Polymer ✲	3	2439
6	Pin, Angle, Crossarm ✲	3	2658
7	Washer, Square, Flat, 5/8", 2 1/4" x 2 1/4"	3	1412
8	Washer, Lock, Spring, Double Coil, Galv, 5/8" ✲	3	2217
9	Bolt, Machine, 5/8" x 7", Galv, 12,400 lb Ultimate Tensile ✲	3	2606
ITEM NO	**DESCRIPTION**	**S3 QTY**	**S/N**
10	Clevis, DE Insulator 1344	1	336
11	Insulator, Spool Clevis, Large, ANSI 53-5 Class	1	774
12	Bolt, Machine, 5/8" x 14", Galv, 12,400 lb Ultimate Tensile ✲	1	156
13	Washer, Curved, Square, Cast, 3" x 3" x 3/8" Thick x 13/16" Hole	1	1392
14	Washer, Lock, Spring, Double Coil, Galv, 5/8" ✲	1	2217
15	Wire, Tie, AL Annealed #4 SD	10	1421

Clark Public Utilities

CONSTRUCTION STANDARDS

3Ø SINGLE 10' CROSSARM
6° TO 10° ✲
795 AAC MAX WIRE

REVISIONS

R	DATE	ENGR	OPS
1	3/02	REDRAWN	IN CAD
2	6/7/06	LB	AH
3	1/4/18	CM	DK
4	2/11/25	CM	GM

PAGE: 2 of 2

D2B

CAD FILE: D2B

APP: ELM

DATE: 1/31/80

SECTION 340

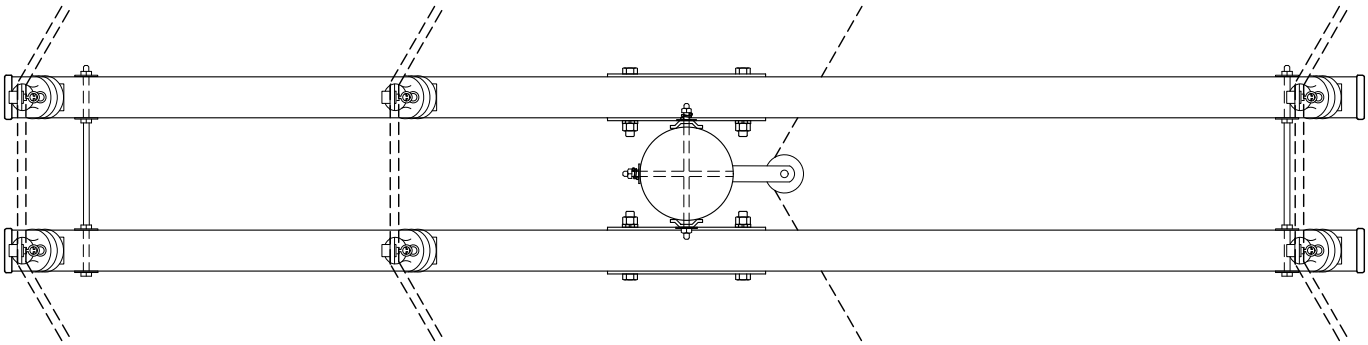

Vise-Top Notes:

- Tighten the bottom bolt until ring breaks off then, tighten the top bolt until ring breaks off
- Remove bolts with socket stick
- Do not reuse bolts after rings have broken off
- Replacement bolts are S/N 2888

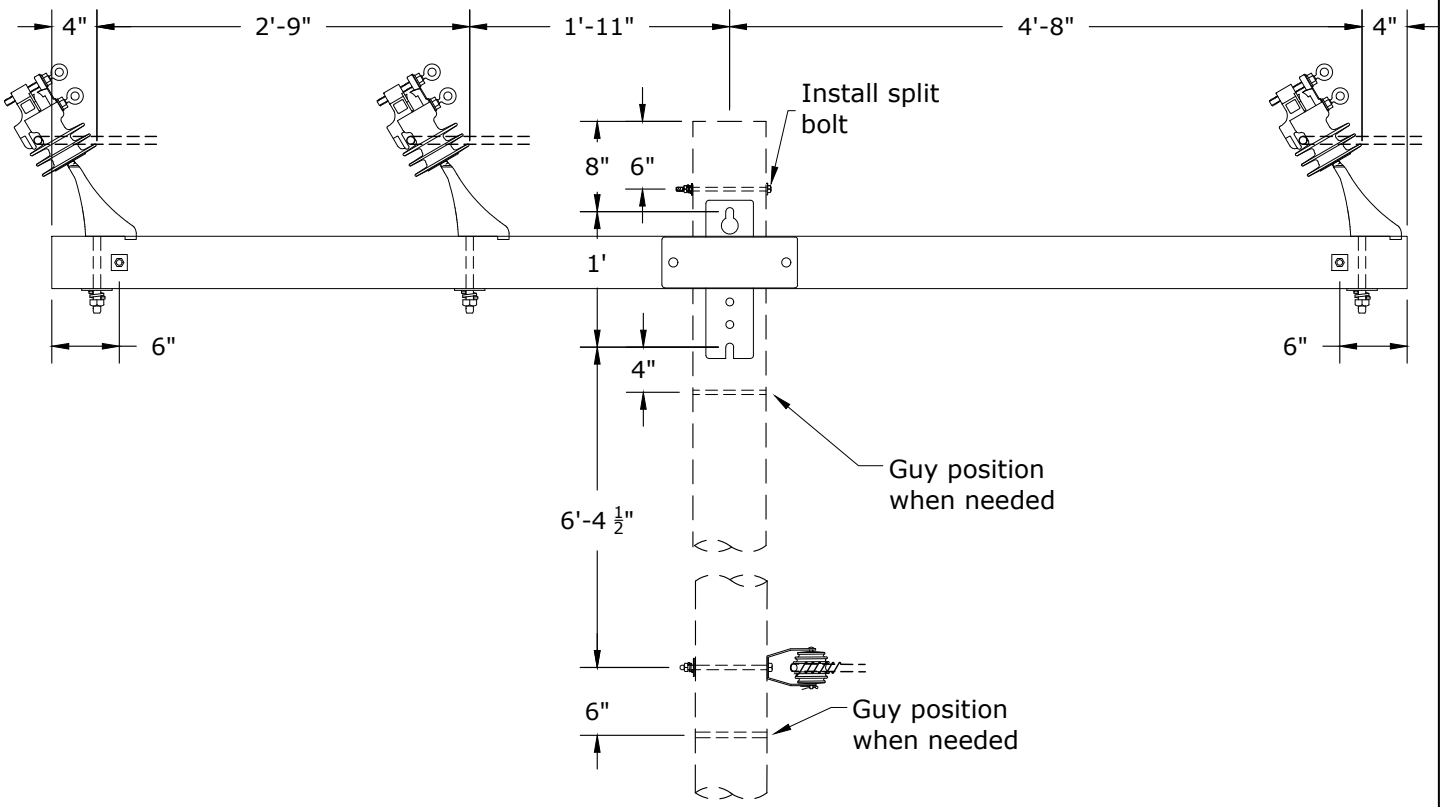

Notes:

1. Maximum line angle calculated for 5,000 lb MWT and 250-ft ruling span.
2. Use this standard for underbuild or other special installations.
3. See Std AC - Avian Covers - Section 400 if needed. Covers only required on center phase.

Rev. 4 - Changed to fiberglass crossarms and increased angle range.

Clark Public Utilities

CONSTRUCTION STANDARDS

3Ø DOUBLE 10' CROSSARM W/ ANGLE VISE-TOPS
✲ 11° TO 30°
795 AAC MAX WIRE

REVISIONS

R	DATE	ENGR	OPS
1	3/02	REDRAWN	IN CAD
2	6/7/06	LB	AH
3	1/4/18	CM	DK
4	2/11/25	CM	GM

PAGE:		CAD FILE:	APP: ELM	SECTION
1 of 2	D3B	D3B	DATE: 1/31/80	340

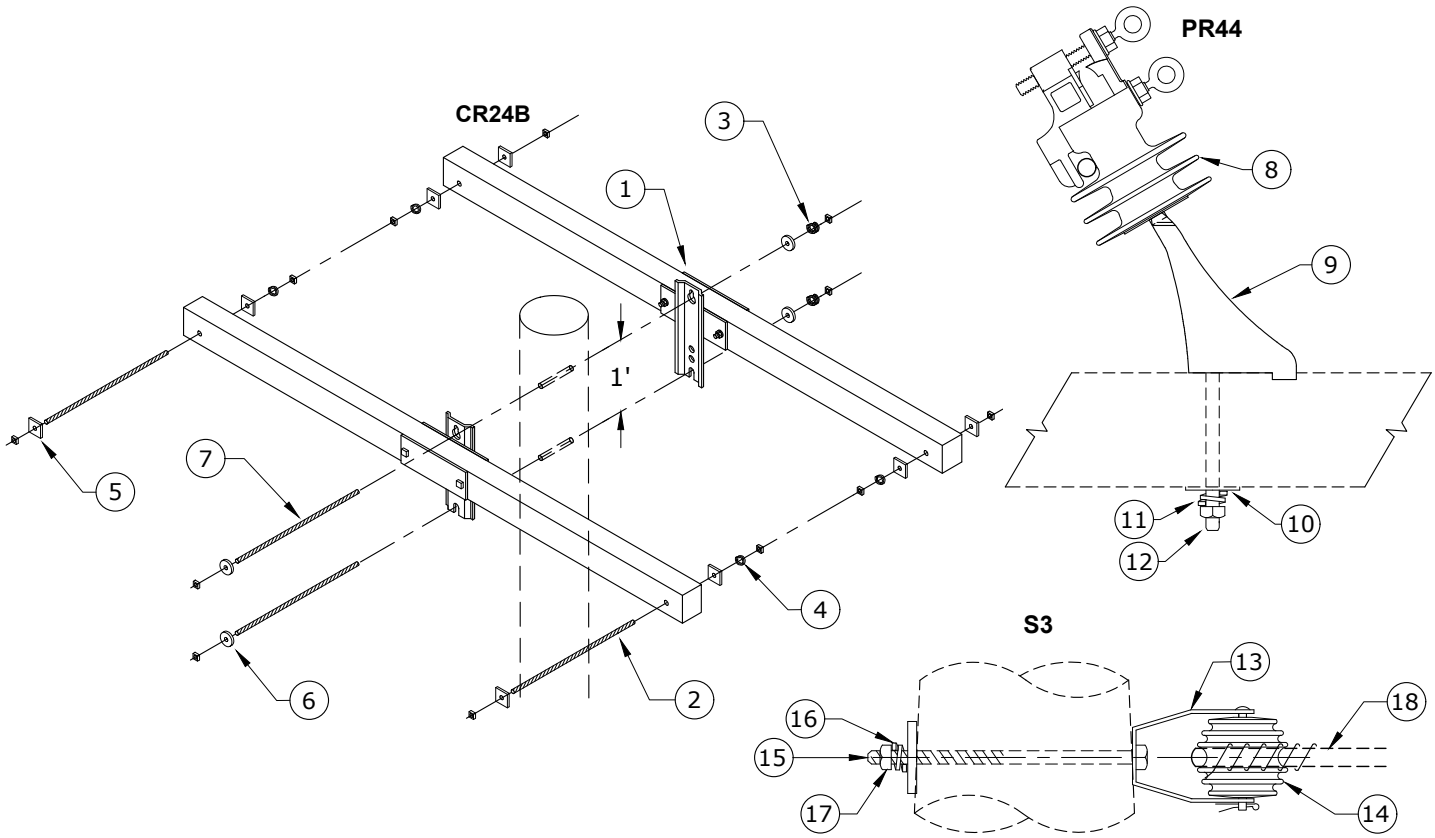

Rev. 4 - Changed to fiberglass crossarms and increased angle range.

ITEM NO	DESCRIPTION	D3B CR24B QTY	S/N
1	Crossarm, Distribution, Fiberglass, 10' Long x 3-5/8" Wide x 4-5/8" High	2	3031
2	Bolt, Double, Arm, 5/8" x 20", Galv, 12,400 lb Ultimate Tensile	2	83
3	Washer, Lock, Spring, Double Coil, Galv, 5/8"	2	2217
4	Washer, Lock, Spring, Single Coil, Galv, 5/8"	4	1403
5	Washer, Square, Flat 5/8", 2 1/4" x 2 1/4"	8	1412
6	Washer, Round, Flat, Glav, 5/8"	4	1395
7	Bolt, Double, Arm, 5/8" x 16", Galv, 12,400 lb Ultimate Tensile	2	81

ITEM NO	DESCRIPTION	PR44 (6) QTY	S/N
8	Insulator, Vise-Top, Polymer ✡	6	2439
9	Pin, Angle, Crossarm ✡	6	2658
10	Washer, Square, Flat, 5/8", 2 1/4" x 2 1/4"	6	1412
11	Washer, Lock, Spring, Double Coil, Galv, 5/8" ✡	6	2217
12	Bolt, Machine, 5/8" x 7", Galv, 12,400 lb Ultimate Tensile ✡	6	2606

ITEM NO	DESCRIPTION	S3 QTY	S/N
13	Clevis, DE Insulator 1344	1	336
14	Insulator, Spool, Clevis, Large, ANSI 53-5 Class	1	774
15	Bolt, Machine, 5/8" x 14", Galv, 12,400 lb Ultimate Tensile	1	156
16	Washer, Curved, Square, Cast, 3" x 3" x 3/8" Thick x 13/16" Hole	1	1392
17	Washer, Lock, Spring, Double Coil, Galv, 5/8"	1	2217
18	Wire, Tie, AL Annealed #4 SD	10	1421

Clark Public Utilities

CONSTRUCTION STANDARDS

3Ø DOUBLE 10' CROSSARM W/ ANGLE VISE-TOPS
✡ 11° TO 30°
795 AAC MAX WIRE

REVISIONS

R	DATE	ENGR	OPS
1	3/02	REDRAWN	IN CAD
2	6/7/06	LB	AH
3	1/4/18	CM	DK
4	2/11/25	CM	GM

PAGE: 2 of 2

D3B

CAD FILE: D3B

APP: ELM

DATE: 1/31/80

SECTION 340

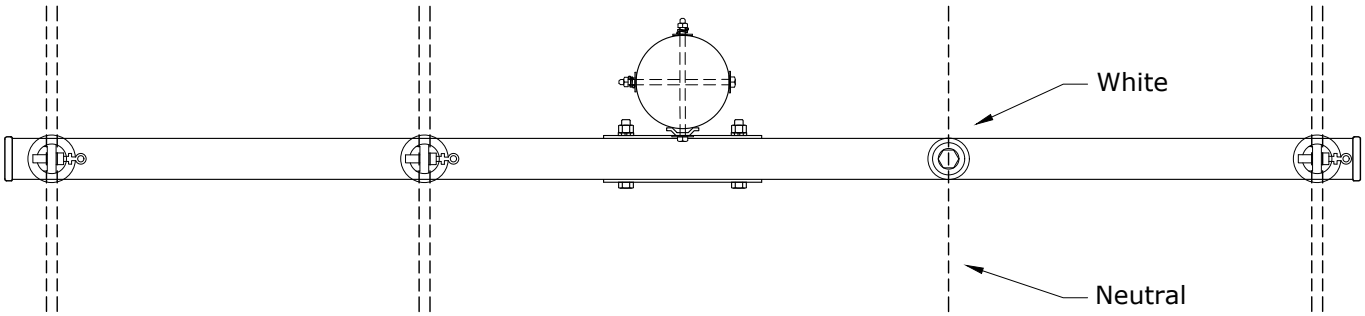

Vise-Top Notes:

- Tighten the bottom bolt until ring breaks off then, tighten the top bolt until ring breaks off
- Remove bolts with socket stick
- Do not reuse bolts after rings have broken off
- Replacement bolts are S/N 2888

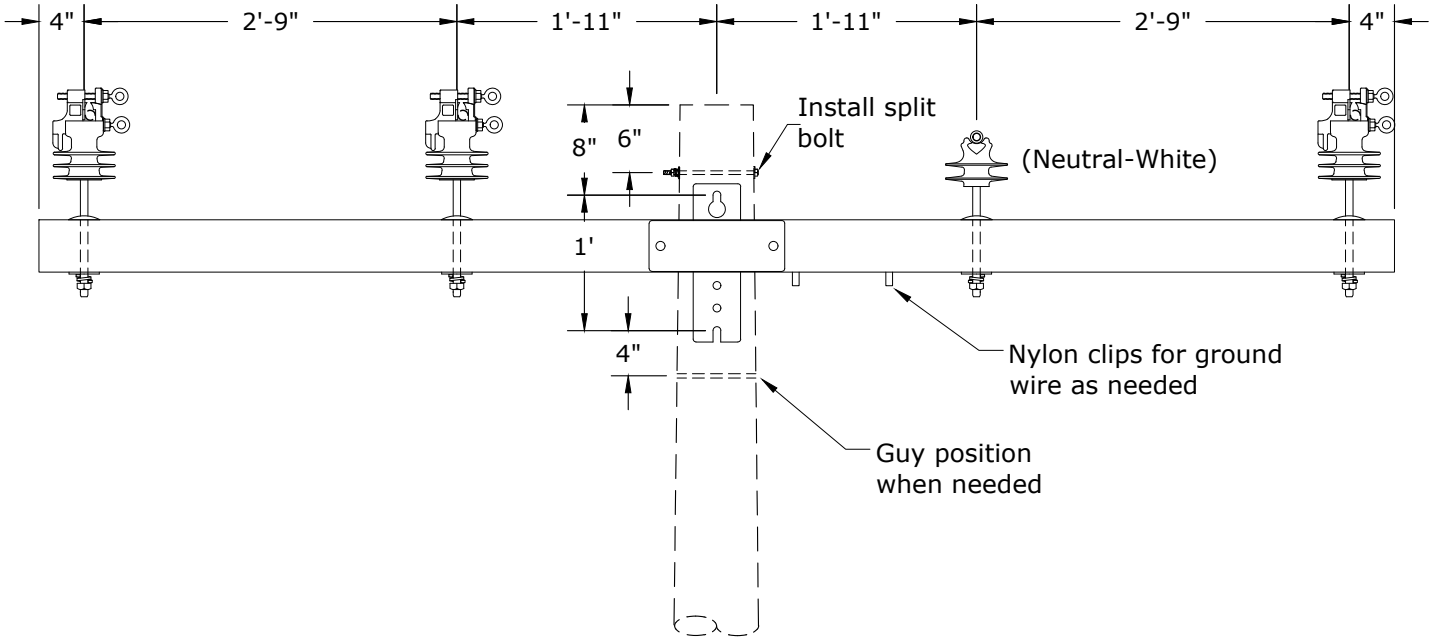

Notes:

1. Maximum line angle calculated for 5,000 lb MWT and 250-ft ruling span.
2. This framing is for clearance limited situations only.
3. See Std AC - Avian Covers - Section 400 if needed. Covers only required on center phase and neutral.

Rev. 4 - Changed to fiberglass crossarm.

Clark Public Utilities

CONSTRUCTION STANDARDS

3Ø SINGLE 10' CROSSARM-HIGH NEUTRAL
0° TO 5°
795 AAC MAX WIRE

REVISIONS

R	DATE	ENGR	OPS
1	3/02	REDRAWN	IN CAD
2	6/7/06	LB	AH
3	1/4/18	CM	DK
4	2/11/25	CM	GM

PAGE:		CAD FILE:	APP: ELM	SECTION
1 of 2	D4B	D4B	DATE: 1/31/80	340

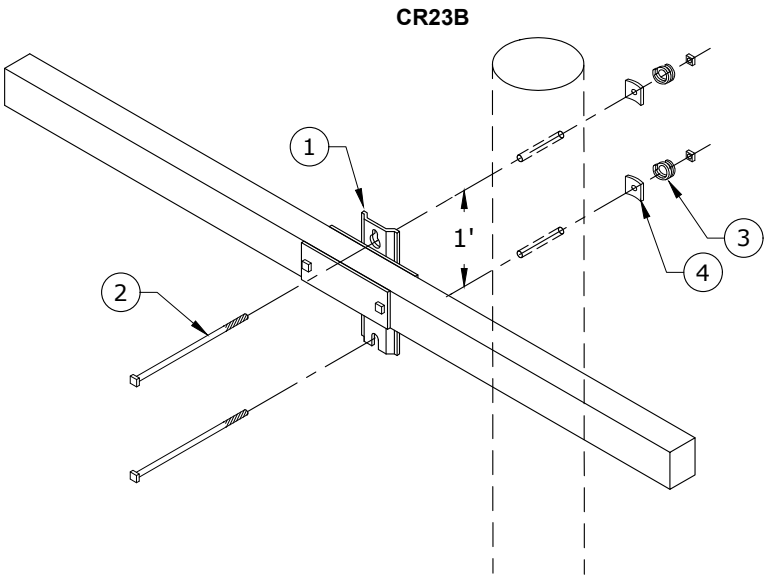

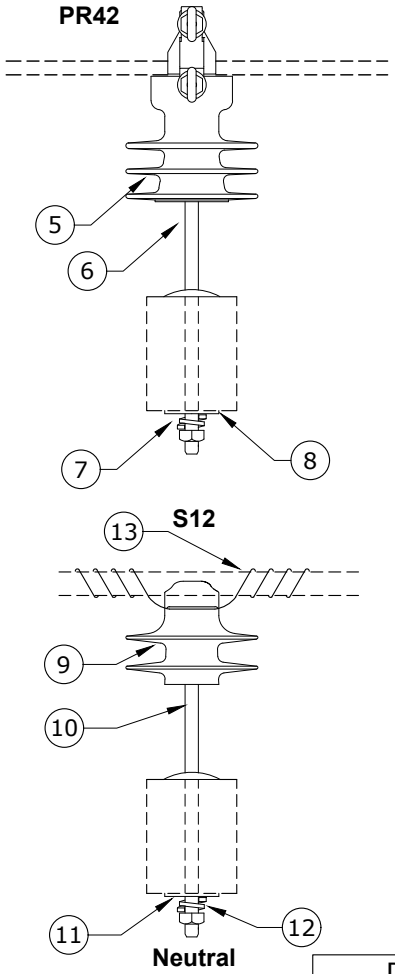

Rev. 4 - Changed to fiberglass crossarm.

ITEM NO	DESCRIPTION	D4B CR23B ✲ QTY	S/N
1	Crossarm, Distribution, Fiberglass, 10' Long x 3-5/8" Wide x 4-5/8" High	1	3031
2	Bolt, Machine, 5/8" x 14", Galv, 12,400 lb Ultimate Tensile	2	156
3	Washer, Lock, Spring, Double Coil, Galv, 5/8"	2	2217
4	Washer, Curved, Square, Cast, 3" x 3" x 3/8" Thick x 13/16" Hole	2	1392
ITEM NO	**DESCRIPTION**	**PR42 (3) QTY**	**S/N**
5	Insulator, Vise-Top, Polymer	3	2439
6	Pin, Crossarm	3	961
7	Washer, Lock, Spring, Double Coil, Galv, 5/8"	3	2217
8	Washer, Square, Flat, 5/8", 2 1/4" x 2 1/4"	3	1412
ITEM NO	**DESCRIPTION**	**S12 QTY**	**S/N**
9	Insulator, Pin, C Neck, White Polymer	1	2656
10	Pin, Crossarm	1	961
11	Washer, Square, Flat, 5/8", 2 1/4" x 2 1/4"	1	1412
12	Washer, Lock, Spring, Double Coil, Galv, 5/8"	1	2217
13	Wire, Tie, AL Annealed #4 SD	10	1421
ITEM NO	**DESCRIPTION**	**Additional Materials QTY**	**S/N**
14	Clips, Nylon, 1/4"	2	2996
15	Screw, Self-tapping, #10 x 1", Hex Washer Head, TEK, Stainless Steel	2	2997

Clark Public Utilities

CONSTRUCTION STANDARDS

3Ø SINGLE 10' CROSSARM-HIGH NEUTRAL
0° TO 5°
795 AAC MAX WIRE

REVISIONS

R	DATE	ENGR	OPS
1	3/02	REDRAWN	IN CAD
2	6/7/06	LB	AH
3	1/4/18	CM	DK
4	2/11/25	CM	GM

PAGE: 2 of 2

D4B

CAD FILE: D4B

APP: ELM
DATE: 1/31/80

SECTION 340

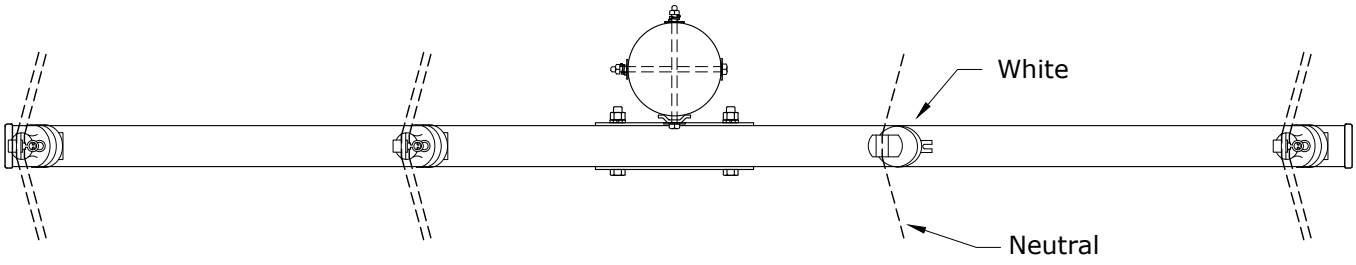

Vise-Top Notes:

- Tighten the bottom bolt until ring breaks off then, tighten the top bolt until ring breaks off
- Remove bolts with socket stick
- Do not reuse bolts after rings have broken off
- Replacement bolts are S/N 2888

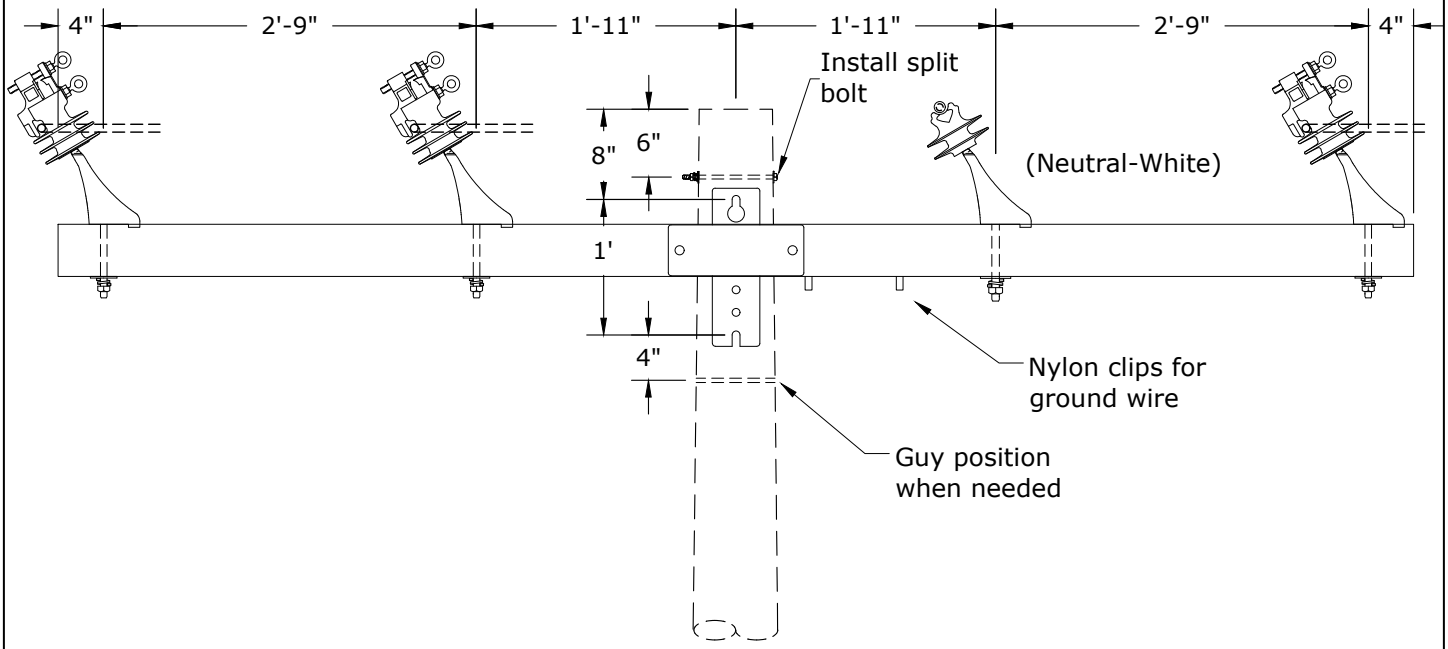

Notes:

1. Maximum line angle calculated for 5,000 lb MWT and 250-ft ruling span.
2. This framing is for clearance limited situations only.
3. See Std AC - Avian Covers - Section 400 if needed. Covers only required on center phase and neutral.

Rev. 4 - Changed to fiberglass crossarms with angle pins and reduced angle range.

Clark Public Utilities

CONSTRUCTION STANDARDS

3Ø SINGLE 10' CROSSARM-HIGH NEUTRAL
6° TO 10° ✲
795 AAC MAX WIRE

REVISIONS

R	DATE	ENGR	OPS
1	3/02	REDRAWN	IN CAD
2	6/7/06	LB	AH
3	1/4/18	CM	DK
4	2/11/25	CM	GM

PAGE: 1 of 2

D5B

CAD FILE: D5B

APP: ELM
DATE: 1/31/80

SECTION 340

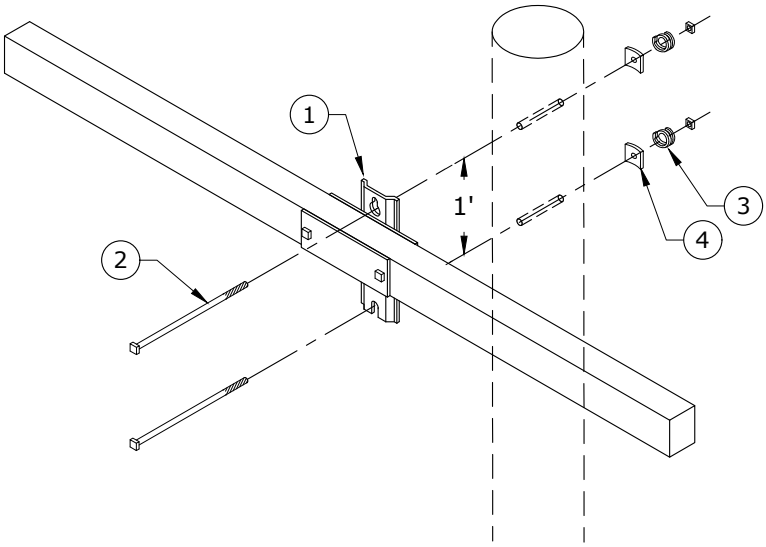

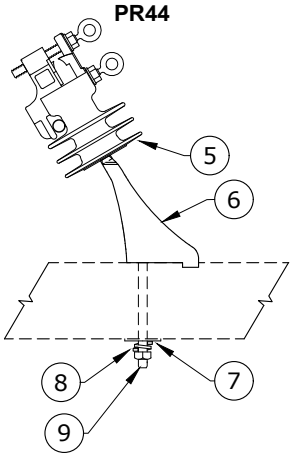

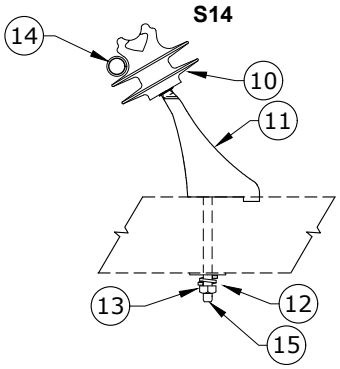

Neutral-White

Rev. 4 - Changed to fiberglass crossarms with angle pins and reduced angle range.

ITEM NO	DESCRIPTION	D5B CR23B QTY	S/N
1	Crossarm, Distribution, Fiberglass, 10' Long x 3-5/8" Wide x 4-5/8" High	1	3031
2	Bolt, Machine, 5/8" x 14", Galv, 12,400 lb Ultimate Tensile	2	156
3	Washer, Lock, Spring, Double Coil, Galv, 5/8"	2	2217
4	Washer, Curved, Square, Cast, 3" x 3" x 3/8" Thick x 13/16" Hole	2	1392

ITEM NO	DESCRIPTION	PR44 (3) QTY	S/N
5	Insulator, Vise-Top, Polymer ✡	3	2439
6	Pin, Angle, Crossarm ✡	3	2658
7	Washer, Square, Flat, 5/8", 2 1/4" x 2 1/4"	3	1412
8	Washer, Lock, Spring, Double Coil, Galv, 5/8" ✡	3	2217
9	Bolt, Machine, 5/8" x 7", Galv, 12,400 lb Ultimate Tensile ✡	3	2606

ITEM NO	DESCRIPTION	S14 QTY	S/N
10	Insulator, Pin, C Neck, White, Polymer	1	2656
11	Pin, Angle, Crossarm	1	2658
12	Washer, Square, Flat, 5/8", 2 1/4" x 2 1/4"	1	1412
13	Washer, Lock, Spring, Double Coil, Galv, 5/8"	1	2217
14	Wire, Tie, AL Annealed #4 SD	10	1421
15	Bolt, Machine, 5/8" x 7", Galv, 12,400 lb Ultimate Tensile	1	2606

ITEM NO	DESCRIPTION	Additional Materials QTY	S/N
16	Clips, Nylon, 1/4"	2	2996
17	Screw, Self-tapping, #10 x 1", Hex Washer Head, TEK, Stainless Steel	2	2997

Clark Public Utilities

CONSTRUCTION STANDARDS

3Ø SINGLE 10' CROSSARM-HIGH NEUTRAL
6° TO 10° ✡
795 AAC MAX WIRE

REVISIONS

R	DATE	ENGR	OPS
1	3/02	REDRAWN	IN CAD
2	6/7/06	LB	AH
3	1/4/18	CM	DK
4	2/11/25	CM	GM

PAGE: 2 of 2

D5B

CAD FILE: D5B

APP: ELM
DATE: 1/31/80

SECTION 340

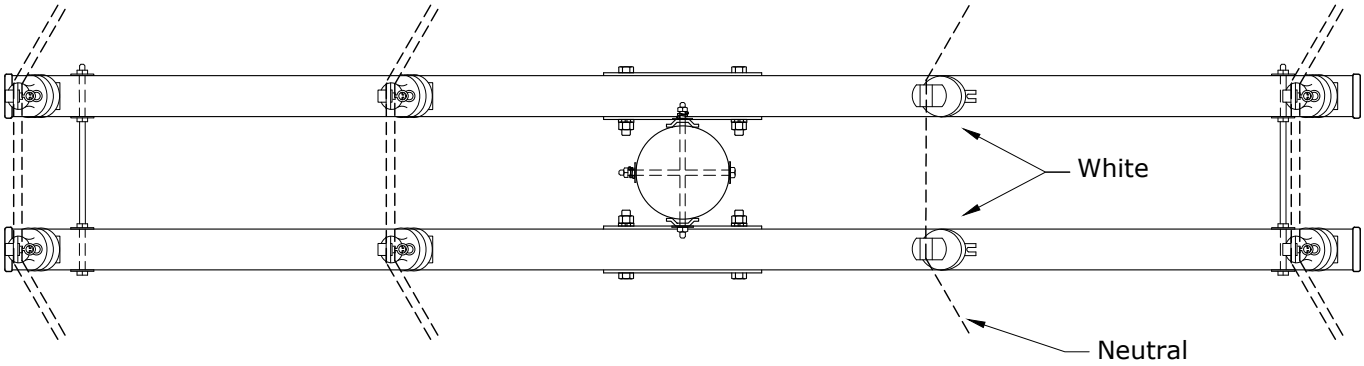

Vise-Top Notes:

- Tighten the bottom bolt until ring breaks off then, tighten the top bolt until ring breaks off
- Remove bolts with socket stick
- Do not reuse bolts after rings have broken off
- Replacement bolts are S/N 2888

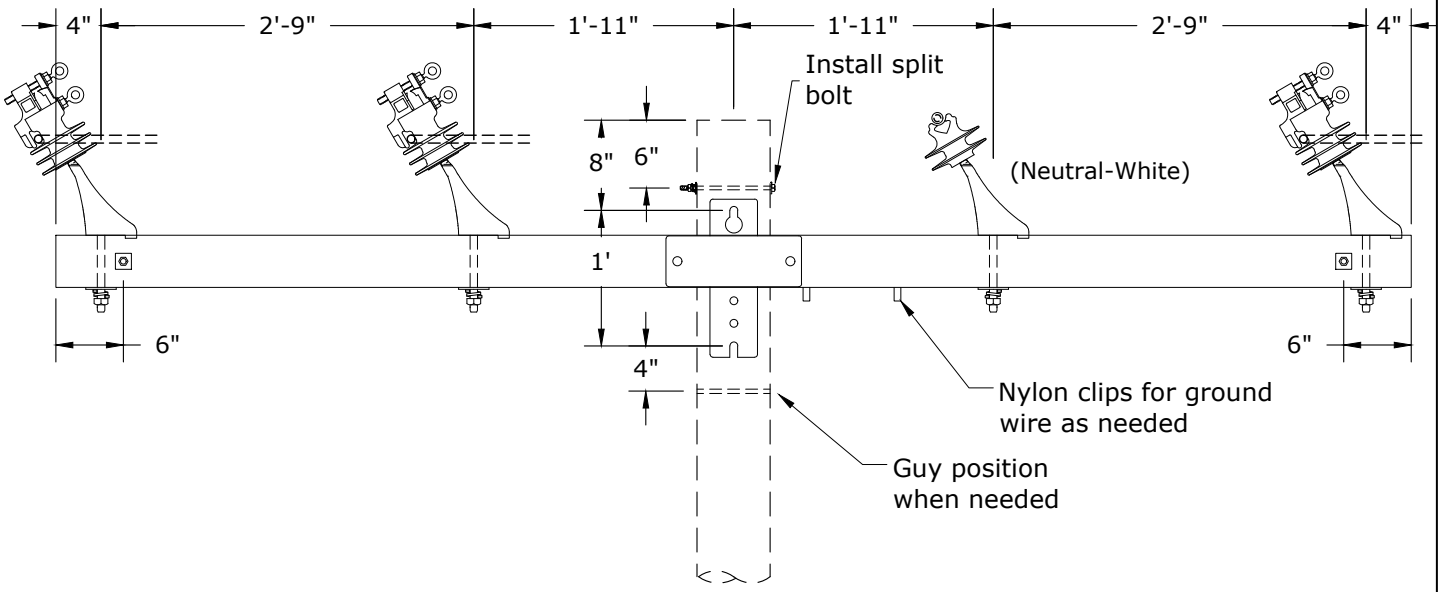

Notes:

1. Maximum line angle calculated for 5,000 lb MWT and 250-ft ruling span.
2. This framing is for clearance limited situations only.
3. See Std AC - Avian Covers - Section 400 if needed. Covers only required on center phase and neutral.

Rev. 4 - Changed to fiberglass crossarms and increased angle range.

Clark Public Utilities

CONSTRUCTION STANDARDS

3Ø DOUBLE 10' CROSSARM W/ ANGLE VISE-TOPS
HIGH NEUTRAL,✡11° TO 30°
795 AAC MAX WIRE

REVISIONS

R	DATE	ENGR	OPS
1	3/02	REDRAWN	IN CAD
2	6/7/06	LB	AH
3	1/4/18	CM	DK
4	2/11/25	CM	GM

PAGE: 1 of 2

D6B

CAD FILE: D6B

APP: ELM
DATE: 1/31/80

SECTION 340

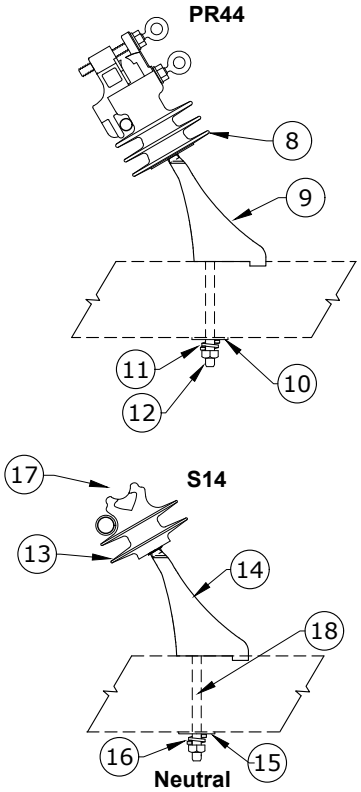

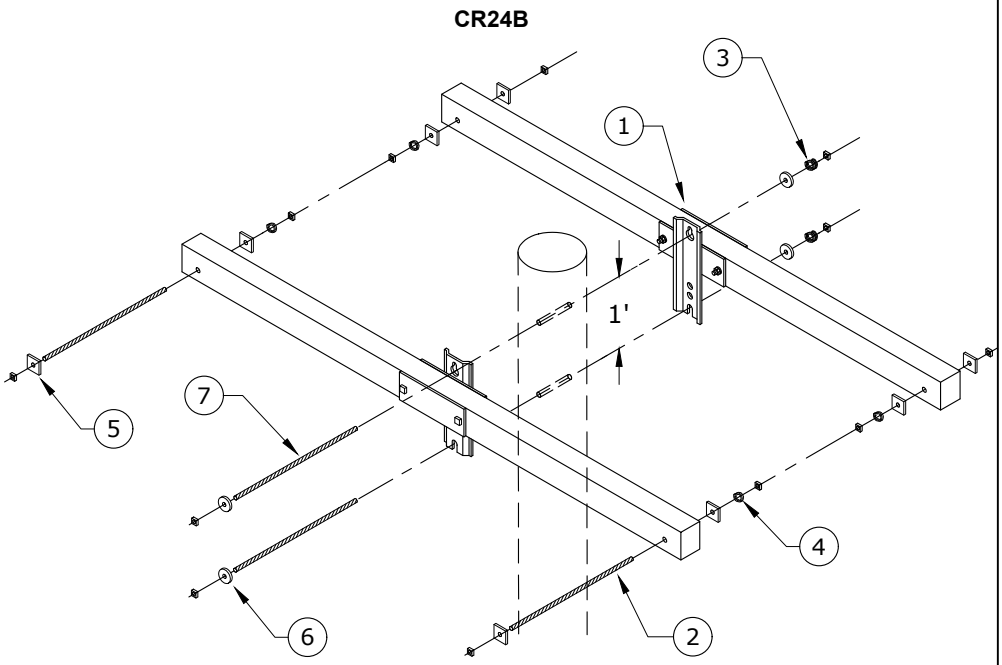

Rev. 4 - Changed to fiberglass crossarms and increased angle range.

ITEM NO	DESCRIPTION	D6B CR24B QTY	S/N
1	Crossarm, Distribution, Fiberglass, 10' Long x 3-5/8" Wide x 4-5/8" High	2	3031
2	Bolt, Double, Arm, 5/8" x 20", Galv, 12,400 lb Ultimate Tensile	2	83
3	Washer, Lock, Spring, Double Coil, Galv, 5/8"	2	2217
4	Washer, Lock, Spring, Single Coil, Galv, 5/8"	4	1403
5	Washer, Square, Flat 5/8", 2 1/4" x 2 1/4"	8	1412
6	Washer, Round, Flat, Glav, 5/8"	4	1395
7	Bolt, Double, Arm, 5/8" x 16", Galv, 12,400 lb Ultimate Tensile	2	81
ITEM NO	**DESCRIPTION**	**PR44 (6) QTY**	**S/N**
8	Insulator, Vise-Top, Polymer ✡	6	2439
9	Pin, Angle, Crossarm ✡	6	2658
10	Washer, Square, Flat, 5/8", 2 1/4" x 2 1/4"	6	1412
11	Washer, Lock, Spring, Double Coil, Galv, 5/8" ✡	6	2217
12	Bolt, Machine, 5/8" x 7", Galv, 12,400 lb Ultimate Tensile ✡	6	2606
ITEM NO	**DESCRIPTION**	**S14 (2) QTY**	**S/N**
13	Insulator, Pin, C Neck, White Polymer	2	2656
14	Pin, Angle, Crossarm	2	2658
15	Washer, Square, Flat, 5/8", 2 1/4" x 2 1/4"	2	1412
16	Washer, Lock, Spring, Double Coil, Galv, 5/8" ✡	2	2217
17	Wire, Tie, AL Annealed #4 SD	20	1421
18	Bolt, Machine, 5/8" x 7", Galv, 12,400 lb Ultimate Tensile ✡	2	2606
ITEM NO	**DESCRIPTION**	**Additional Materials QTY**	**S/N**
19	Clips, Nylon, 1/4"	2	2996
20	Screw, Self-tapping, #10 x 1", Hex Washer Head, TEK, Stainless Steel	2	2997

Clark Public Utilities

CONSTRUCTION STANDARDS

3Ø DOUBLE 10' CROSSARM W/ ANGLE VISE-TOPS
HIGH NEUTRAL,✡11° TO 30°
795 AAC MAX WIRE

REVISIONS

R	DATE	ENGR	OPS
1	3/02	REDRAWN	IN CAD
2	6/7/06	LB	AH
3	1/4/18	CM	DK
4	2/11/25	CM	GM

PAGE: 2 of 2

D6B

CAD FILE: D6B

APP: ELM

DATE: 1/31/80

SECTION 340

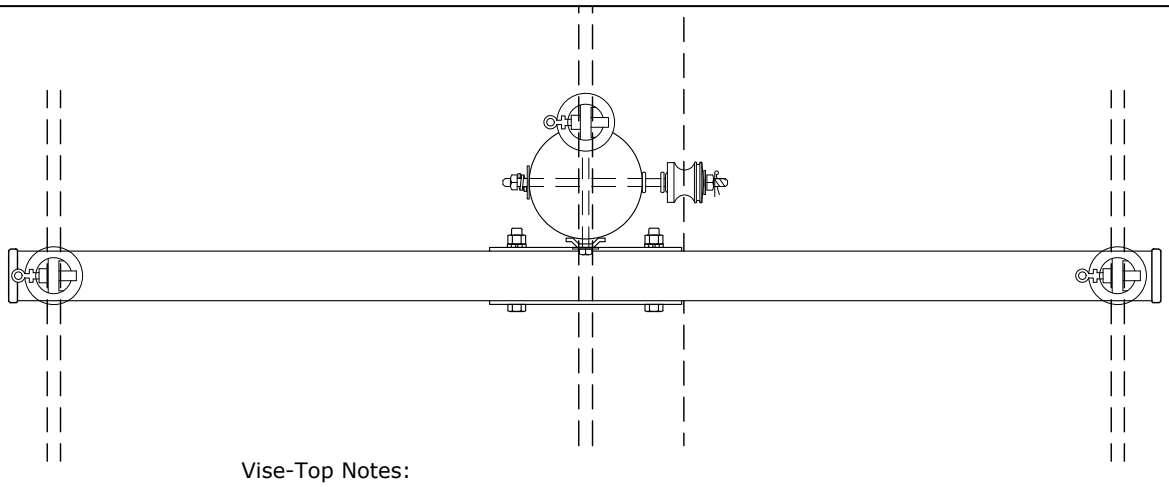

Vise-Top Notes:

- Tighten the bottom bolt until ring breaks off then, tighten the top bolt until ring breaks off
- Remove bolts with socket stick
- Do not reuse bolts after rings have broken off
- Replacement bolts are S/N 2888

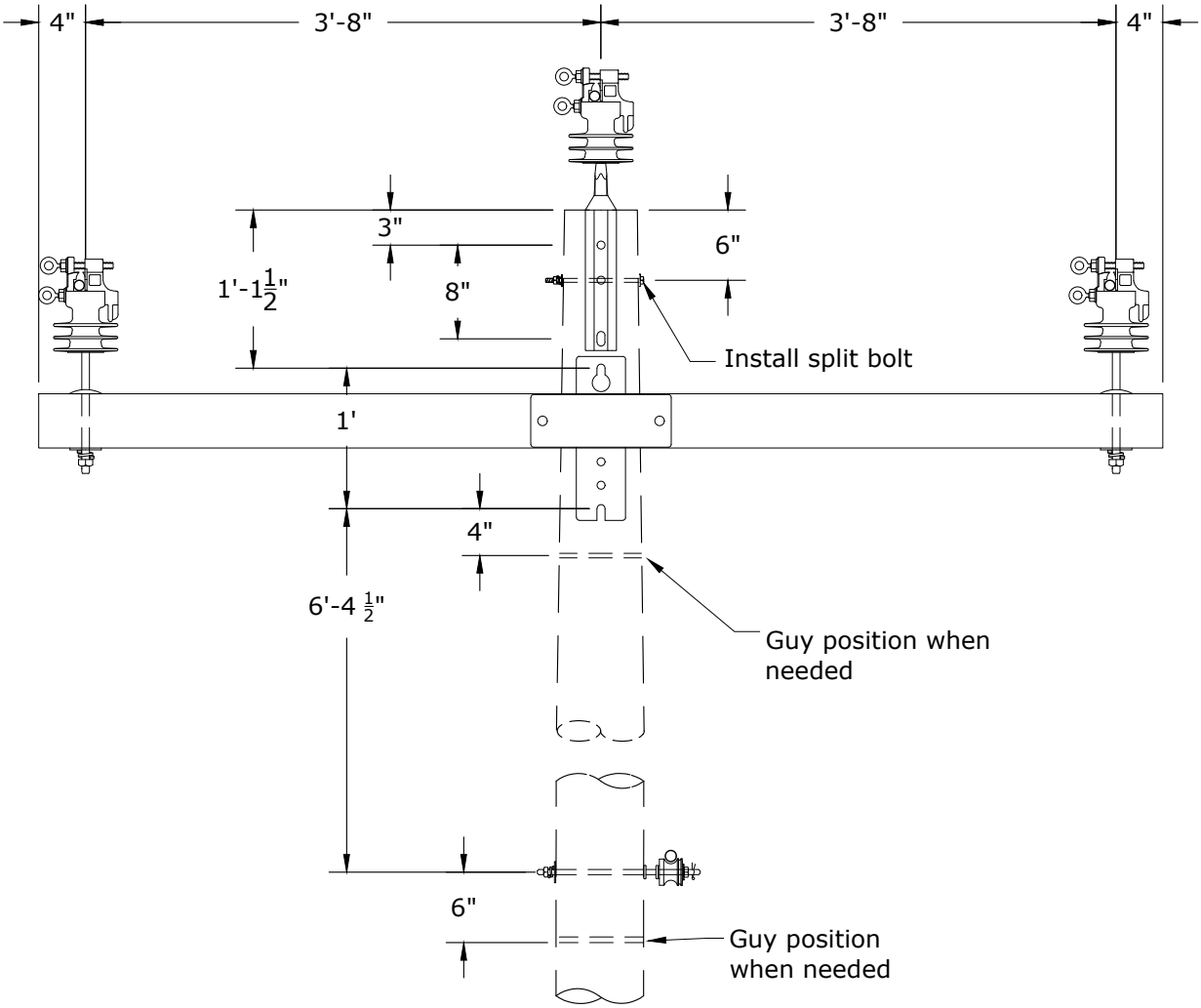

Notes:

1. Maximum line angle calculated for 5,000 lb MWT and 250-ft ruling span.
2. See Std AC - Avian Covers - Section 400 if needed. Covers only required on center phase.

Rev. 4 - Changed to fiberglass crossarm.

Clark Public Utilities

CONSTRUCTION STANDARDS

3Ø SINGLE 8' CROSSARM W/ POLE TOP
0° TO 5°
795 AAC MAX WIRE

REVISIONS

R	DATE	ENGR	OPS
1	3/02	REDRAWN	IN CAD
2	6/7/06	LB	AH
3	1/4/18	CM	DK
4	2/11/25	CM	GM

PAGE:		CAD FILE:	APP: ELM	SECTION
1 of 2	D7A	D7A	DATE: 1/31/80	340

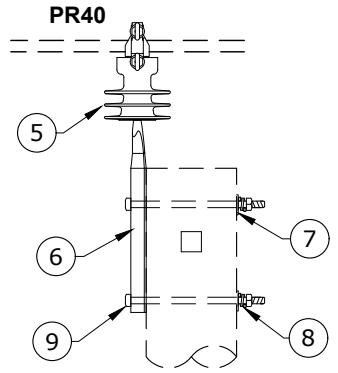

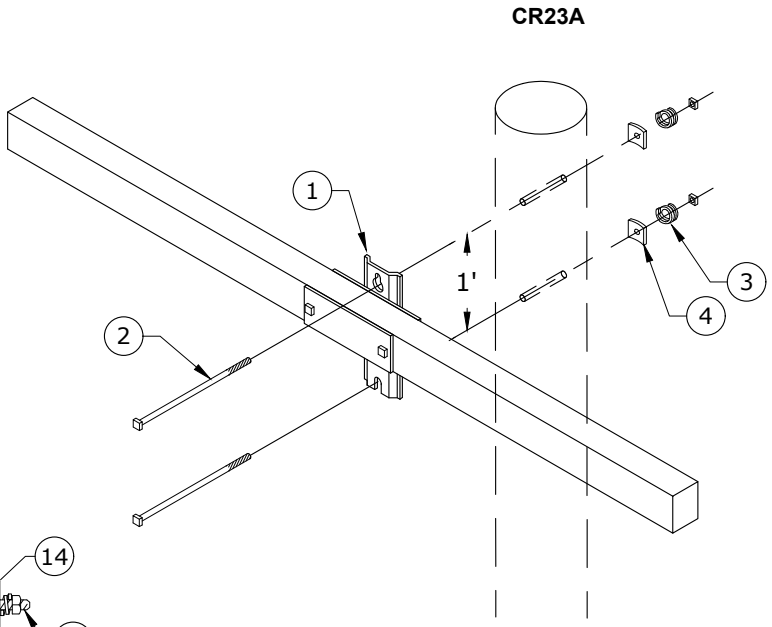

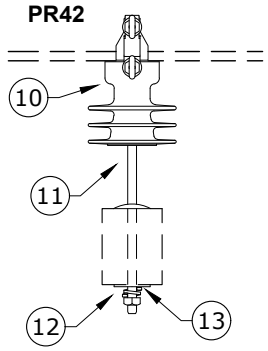

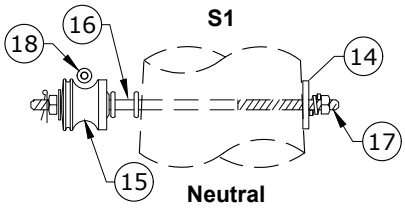

Rev. 4 - Changed to fiberglass crossarm.

ITEM NO	DESCRIPTION	D7A CR23A QTY	S/N
1	Crossarm, Distribution, Fiberglass, 8' Long x 3-5/8" Wide x 4-5/8" High	1	3030
2	Bolt, Machine, 5/8" x 14", Galv, 12,400 lb Ultimate Tensile	2	156
3	Washer, Lock, Spring, Double Coil, Galv, 5/8"	2	2217
4	Washer, Curved, Square, Cast, 3" x 3" x 3/8" Thick x 13/16" Hole	2	1392
ITEM NO	**DESCRIPTION**	**PR40 QTY**	**S/N**
5	Insulator, Vise-Top, Polymer ✡	1	2439
6	Pin, Pole Top ✡	1	962
7	Washer, Curved, Square, Cast, 3" x 3" x 3/8" Thick x 13/16" Hole	2	1392
8	Washer, Lock, Spring, Double Coil, Galv, 5/8" ✡	2	2217
9	Bolt, Machine, 5/8" x 12", Galv, 12,400 lb Ultimate Tensile ✡	2	155
ITEM NO	**DESCRIPTION**	**PR42 (2) QTY**	**S/N**
10	Insulator, Vise-Top, Polymer ✡	2	2439
11	Pin, Crossarm ✡	2	961
12	Washer, Lock, Spring, Double Coil, Galv, 5/8" ✡	2	2217
13	Washer, Square, Flat, 5/8", 2 1/4" x 2 1/4"	2	1412
ITEM NO	**DESCRIPTION**	**S1 QTY**	**S/N**
14	Washer, Curved, Square, Cast, 3" x 3" x 3/8" Thick x 13/16" Hole	1	1392
15	Insulator, Spool, Clevis, Small, ANSI 53-2 Class	1	773
16	Bolt, Double Upset, 5/8" x 14", Galv, 12,400 lb Ultimate Tensile ✡	1	1580
17	Washer, Lock, Spring, Double Coil, Galv, 5/8" ✡	1	2217
18	Wire, Tie, AL Annealed #4 SD	10	1421

Clark Public Utilities

CONSTRUCTION STANDARDS

3Ø SINGLE 8' CROSSARM W/ POLE TOP
0° TO 5°
795 AAC MAX WIRE

REVISIONS

R	DATE	ENGR	OPS
1	3/02	REDRAWN	IN CAD
2	6/7/06	LB	AH
3	1/4/18	CM	DK
4	2/11/25	CM	GM

PAGE: 2 of 2

D7A

CAD FILE: D7A

APP: ELM

DATE: 1/31/80

SECTION 340

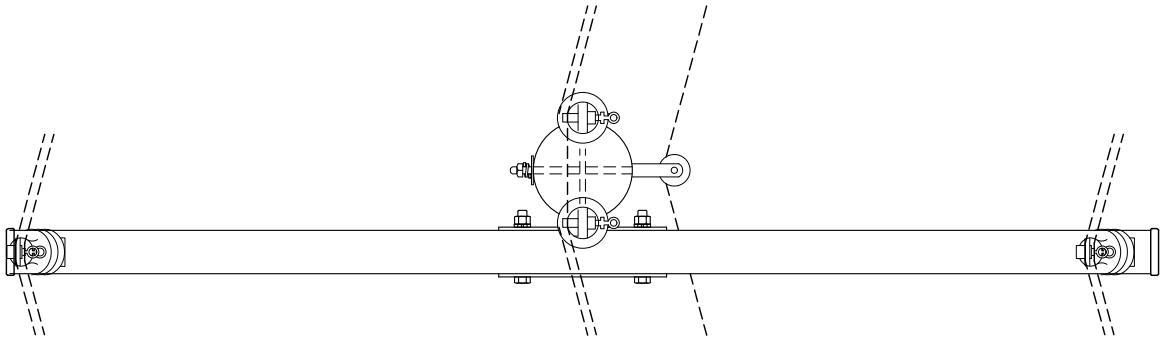

Vise-Top Notes:

- Tighten the bottom bolt until ring breaks off then, tighten the top bolt until ring breaks off
- Remove bolts with socket stick
- Do not reuse bolts after rings have broken off
- Replacement bolts are S/N 2888

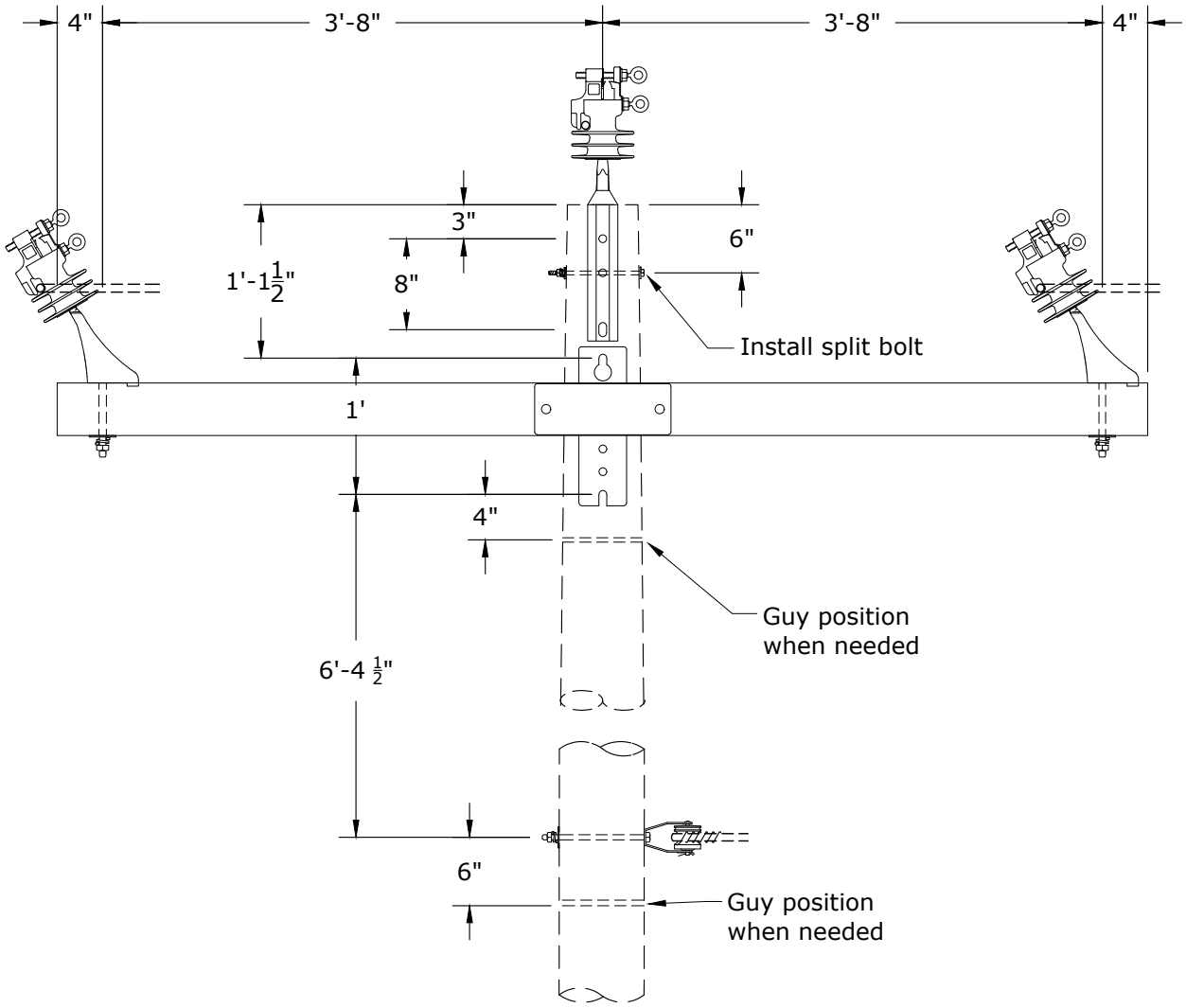

Notes:

1. Maximum line angle calculated for 5,000 lb MWT and 250-ft ruling span.
2. See Std AC - Avian Covers - Section 400 if needed. Covers only required on center phase.

Rev. 4 - Changed to single fiberglass crossarm with angle pin.

Clark Public Utilities

CONSTRUCTION STANDARDS

3Ø SINGLE 8' CROSSARM W/ DOUBLE POLE
TOP - 6° TO 15°
795 AAC MAX WIRE

REVISIONS

R	DATE	ENGR	OPS
1	3/02	REDRAWN	IN CAD
2	6/7/06	LB	AH
3	1/4/18	CM	DK
4	2/11/25	CM	GM

PAGE: 1 of 2

D8A

CAD FILE: D8A

APP: ELM

DATE: 1/31/80

SECTION 340

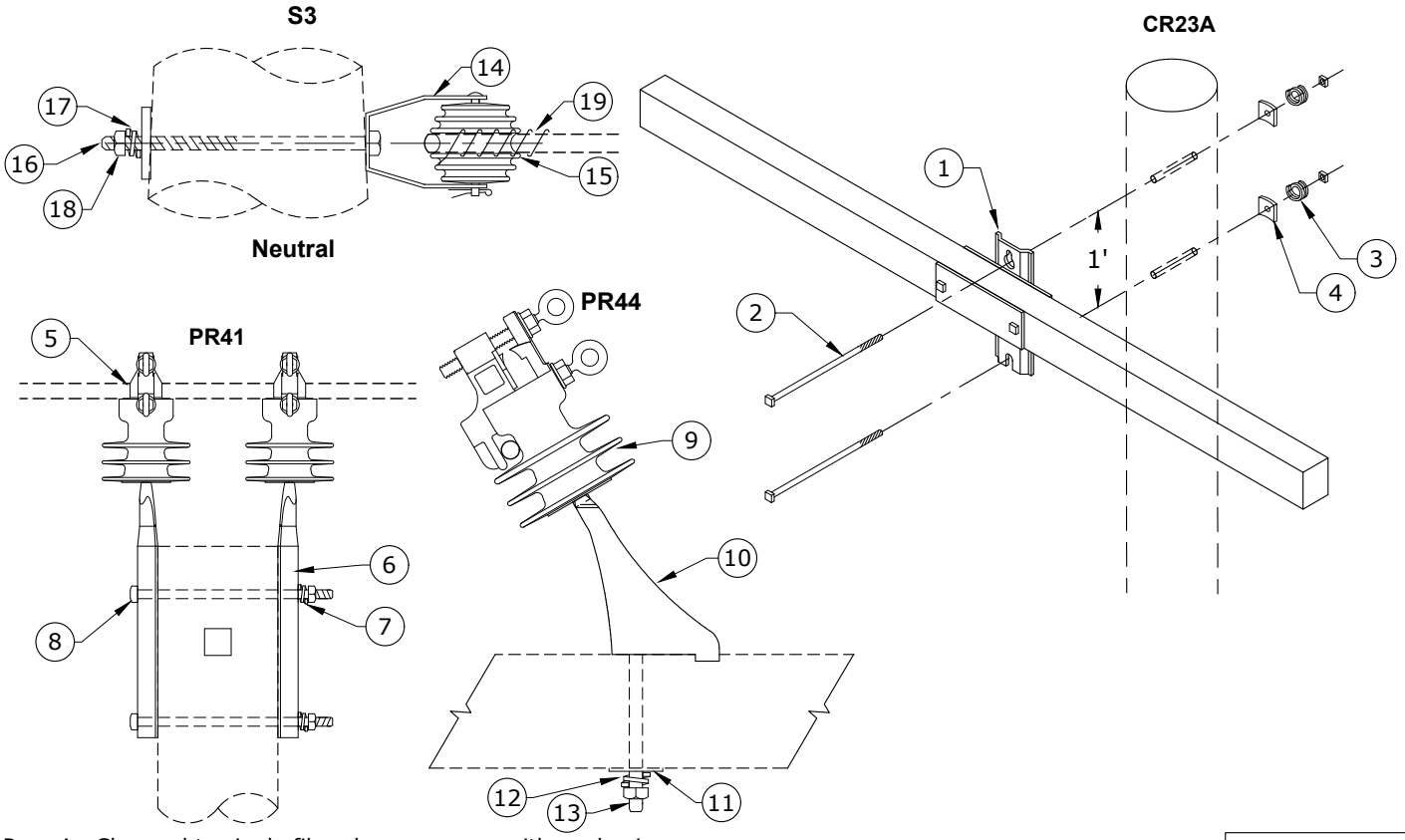

Rev. 4 - Changed to single fiberglass crossarm with angle pin.

ITEM NO	DESCRIPTION	D8A CR23A QTY	S/N
1	Crossarm, Distribution, Fiberglass, 8' Long x 3-5/8" Wide x 4-5/8" High	1	3030
2	Bolt, Machine, 5/8" x 14", Galv, 12,400 lb Ultimate Tensile	2	156
3	Washer, Lock, Spring, Double Coil, Galv, 5/8"	2	2217
4	Washer, Curved, Square, Cast, 3" x 3" x 3/8" Thick x 13/16" Hole	2	1392
ITEM NO	**DESCRIPTION**	**PR41 QTY**	**S/N**
5	Insulator, Vise-Top, Polymer ✡	2	2439
6	Pin, Pole Top ✡	2	962
7	Washer, Lock, Spring, Double Coil, Galv, 5/8" ✡	2	2217
8	Bolt, Machine, 5/8" x 14", Galv, 12,400 lb Ultimate Tensile ✡	2	156
ITEM NO	**DESCRIPTION**	**PR44 (2) QTY**	**S/N**
9	Insulator, Vise-Top, Polymer ✡	2	2439
10	Pin, Angle, Crossarm ✡	2	2658
11	Washer, Square, Flat, 5/8", 2 1/4" x 2 1/4"	2	1412
12	Washer, Lock, Spring, Double Coil, Galv, 5/8" ✡	2	2217
13	Bolt, Machine, 5/8" x 7", Galv, 12,400 lb Ultimate Tensile ✡	2	2606
ITEM NO	**DESCRIPTION**	**S3 QTY**	**S/N**
14	Clevis, DE Insulator 1344	1	336
15	Insulator, Spool, Large, ANSI 53-5 Class	1	774
16	Bolt, Machine, 5/8" x 14", Galv, 12,400 lb Ultimate Tensile	1	156
17	Washer, Curved, Square, Cast, 3" x 3" x 3/8" Thick x 13/16" Hole	1	1392
18	Washer, Lock, Spring, Double Coil, Galv, 5/8"	1	2217
19	Wire, Tie, AL Annealed #4 SD	10	1421

Clark Public Utilities

CONSTRUCTION STANDARDS

3Ø SINGLE 8' CROSSARM W/ DOUBLE POLE
TOP - 6° TO 15°
795 AAC MAX WIRE

REVISIONS

R	DATE	ENGR	OPS
1	3/02	REDRAWN	IN CAD
2	6/7/06	LB	AH
3	1/4/18	CM	DK
4	2/11/25	CM	GM

PAGE: 2 of 2

D8A

CAD FILE: D8A

APP: ELM

DATE: 1/31/80

SECTION 340

Vise-Top Installation:

- 1st tighten the bottom bolt until ring breaks off
- 2nd tighten the top bolt until ring breaks off
- Remove bolts with socket stick
- Do not reuse bolts after rings have broken off

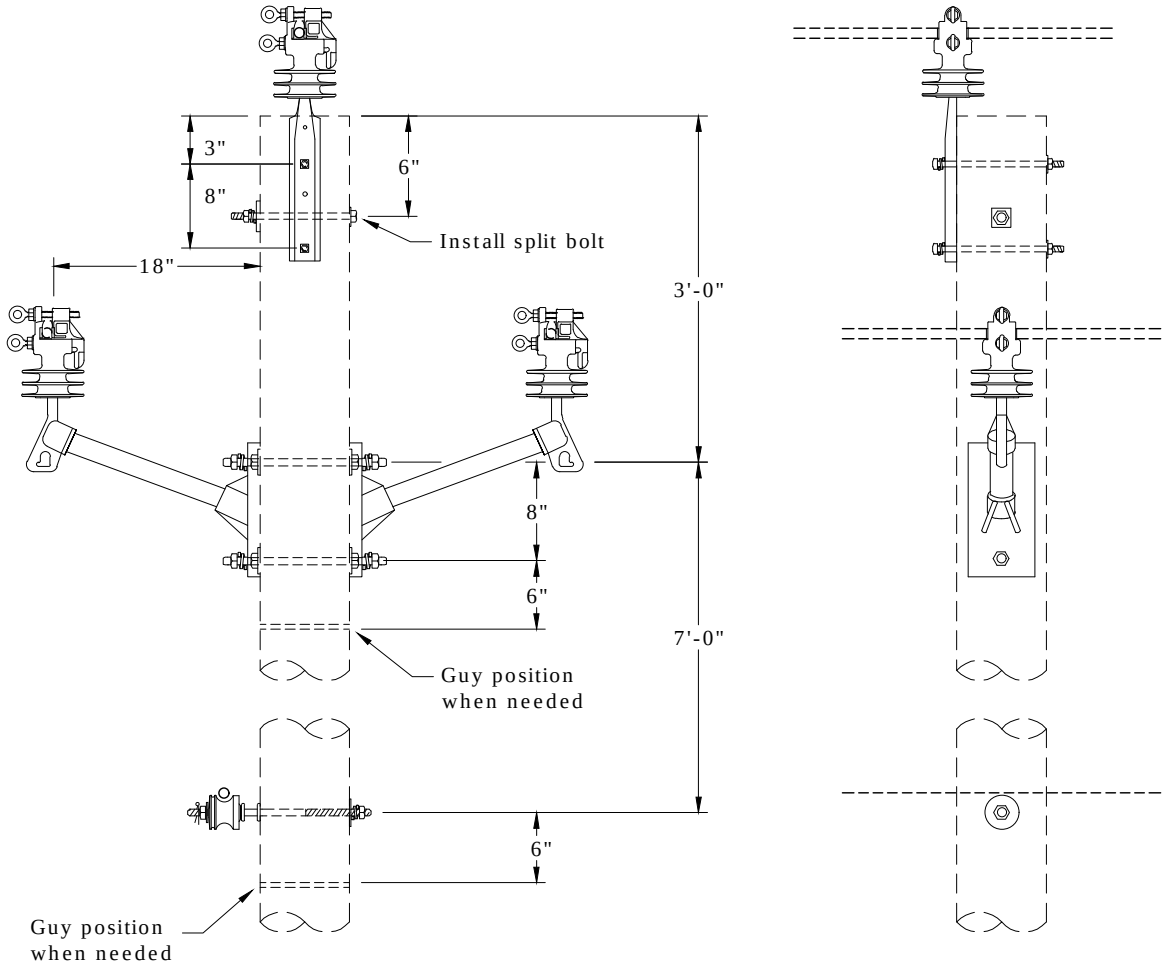

Notes:

1. Maximum line angle calculated for 5,000 lbs. MWT and 250-ft ruling span.
2. See Std AC - Avian Covers - Section 400 if needed. Covers only required on center phase and one of the outside phases.

Rev. 3 - Changed all insulators to vise-top, added avian note, and updated material list.

Clark Public Utilities

CONSTRUCTION STANDARDS

3Ø TWIGGY
0° TO 5°
795 AAC MAX WIRE

REVISIONS

R	DATE	ENGR	OPS
1	3/28/02	HWH	DLK
2	8/10/06	LB	AH
3	1/4/18	CM	DK

PAGE: 1 of 2

D10

CAD FILE: D10

APP:

DATE:

SECTION 340

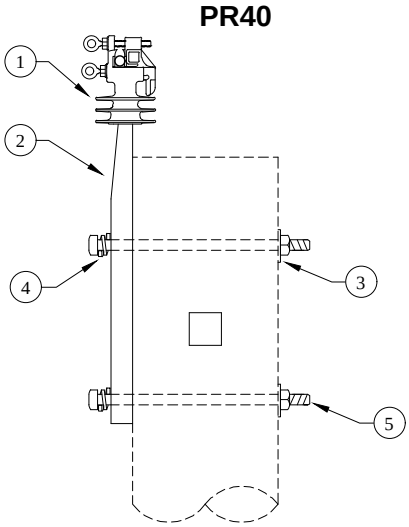

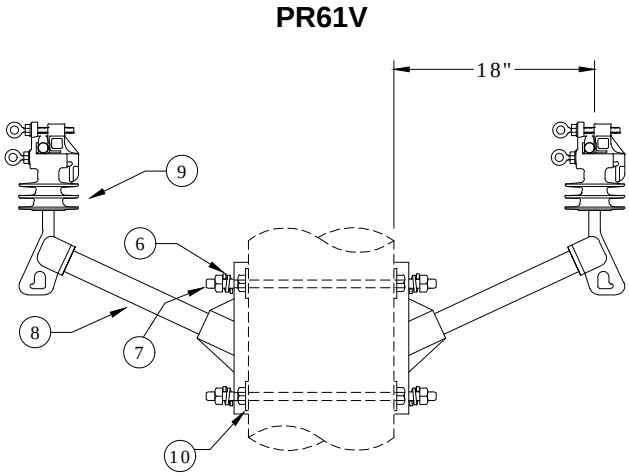

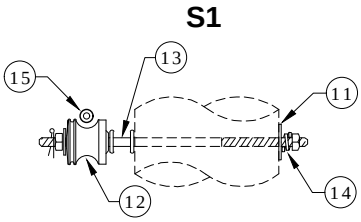

Neutral

Rev. 3 - Changed all insulators to vise-top, added avian note, and updated material list.

ITEM NO.	DESCRIPTION	D10 PR40 QTY.	S/N
1	Insulator, Vise-Top, Polymer ✲	1	2439
2	Pin, Pole Top ✲	1	962
3	Washer, Curved, 3" x 3" x 3/8" Thick x 13/16" Hole	2	1392
4	Washer, Lock, Spring, Double Coil, Galv., 5/8" ✲	2	2217
5	Bolt, Machine, 5/8" x 12", Galv., 12,400 lbs Ultimate Tensile ✲	2	155

ITEM NO.	DESCRIPTION	PR61V QTY.	S/N
6	Washer, Lock, Spring, Double Coil, Galv., 5/8"	4	2217
7	Bolt, Double Arm, 5/8" x 18", Galv., 12,400 lbs Ultimate Tensile	2	82
8	Arm, Epoxy 18" 2500 lbs	2	2504
9	Insulator, Vise-Top, Polymer	2	2439
10	Washer, Flat, Round, Galv., 5/8"	4	1395

ITEM NO.	DESCRIPTION	S1 QTY.	S/N
11	Washer, Curved, Square, Cast, 3" x 3" x 3/8" Thick x 13/16" Hole	1	1392
12	Insulator, Spool, Clevis, Small, ANSI 53-2 Class	1	773
13	Bolt, Double Upset, 5/8" x 14", Galv., 12,400 lbs Ultimate Tensile ✲	1	1580
14	Washer, Lock, Spring, Double Coil, Galv., 5/8" ✲	1	2217
15	Wire, Tie, AL Annealed #4 SD	10	1421

Clark Public Utilities

CONSTRUCTION STANDARDS

3Ø TWIGGY
0° TO 5°
795 AAC MAX WIRE

REVISIONS

R	DATE	ENGR	OPS
1	3/28/02	HWH	DLK
2	8/10/06	LB	AH
3	1/4/18	CM	DK

PAGE: 2 of 2

D10

CAD FILE: D10

APP:

DATE:

SECTION 340

Vise-Top Installation:

- 1st tighten the bottom bolt until ring breaks off
- 2nd tighten the top bolt until ring breaks off
- Remove bolts with socket stick
- Do not reuse bolts after rings have broken off

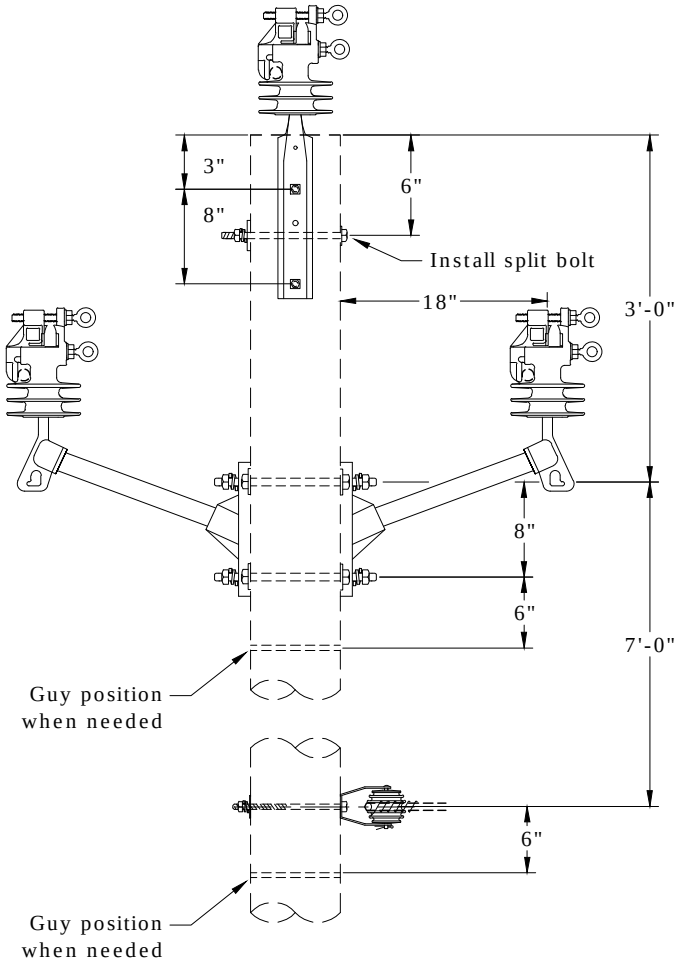

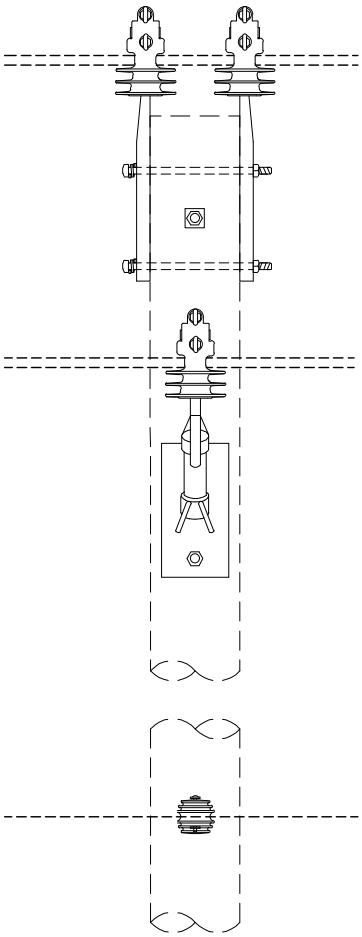

Notes:

1. Maximum line angle calculated for 5,000 lbs. MWT and 250-ft ruling span.
2. See Std AC - Avian Covers - Section 400 if needed. Covers only required on center phase and one of the outside phases.

Rev. 3 - Changed all insulators to vise-top, added avian note, and updated material list.

Clark Public Utilities

CONSTRUCTION STANDARDS

3Ø TWIGGY
6° TO 15°
795 AAC MAX WIRE

REVISIONS

R	DATE	ENGR	OPS
1	3/28/02	HWH	DLK
2	8/10/06	LB	AH
3	1/4/18	CM	DK

PAGE: 1 of 2

D11

CAD FILE: D11

APP:

DATE:

SECTION 340

PR41

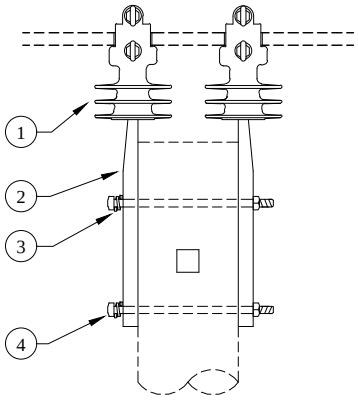

PR61V

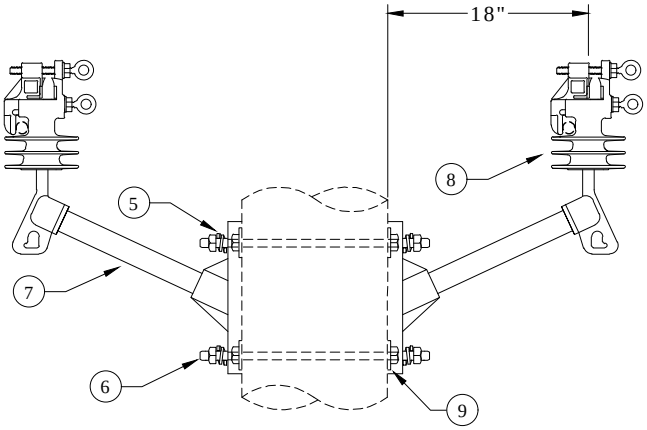

S3

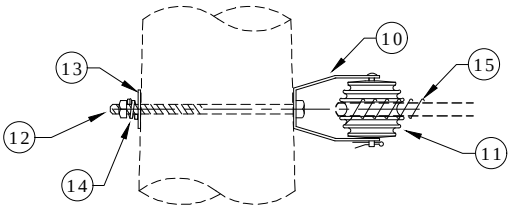

Neutral

Rev. 3 - Changed all insulators to vise-top, added avian note, and updated material list.

ITEM NO.	DESCRIPTION	D11 PR41 QTY.	S/N
1	Insulator, Vise-Top, Polymer ✡	2	2439
2	Pin, Pole Top ✡	2	962
3	Washer, Lock, Spring, Double Coil, Galv., 5/8" ✡	2	2217
4	Bolt, Machine, 5/8" x 14", Galv., 12,400 lbs Ultimate Tensile ✡	2	156
ITEM NO.	**DESCRIPTION**	**PR61V QTY.**	**S/N**
5	Washer, Lock, Spring, Double Coil, Galv., 5/8"	4	2217
6	Bolt, Double Arm, 5/8" x 18", Galv., 12,400 lbs Ultimate Tensile	2	82
7	Arm, Epoxy 18" 2500 lb	2	2504
8	Insulator, Vise-Top, Polymer	2	2439
9	Washer, Flat, Round, Galv., 5/8"	4	1395
ITEM NO.	**DESCRIPTION**	**S3 QTY.**	**S/N**
10	Clevis, DE Insulator 1344	1	336
11	Insulator, Spool, Clevis, Large, ANSI 53-5 Class	1	774
12	Bolt, Machine, 5/8" x 14", Galv., 12,400 lbs Ultimate Tensile ✡	1	156
13	Washer, Curved, Square, Cast, 3" x 3" x 3/8" Thick x 13/16" Hole	1	1392
14	Washer, Lock, Spring, Double Coil, Galv., 5/8" ✡	1	2217
15	Wire, Tie, AL Annealed #4 SD	10	1421

Clark Public Utilities

CONSTRUCTION STANDARDS

3Ø TWIGGY
6° TO 15°
795 AAC MAX WIRE

REVISIONS

R	DATE	ENGR	OPS
1	3/28/02	HWH	DLK
2	8/10/06	LB	AH
3	1/4/18	CM	DK

PAGE: 2 of 2

D11

CAD FILE: D11

APP:

DATE:

SECTION 340

Vise-Top Installation:

- 1st tighten the bottom bolt until ring breaks off
- 2nd tighten the top bolt until ring breaks off
- Remove bolts with socket stick
- Do not reuse bolts after rings have broken off

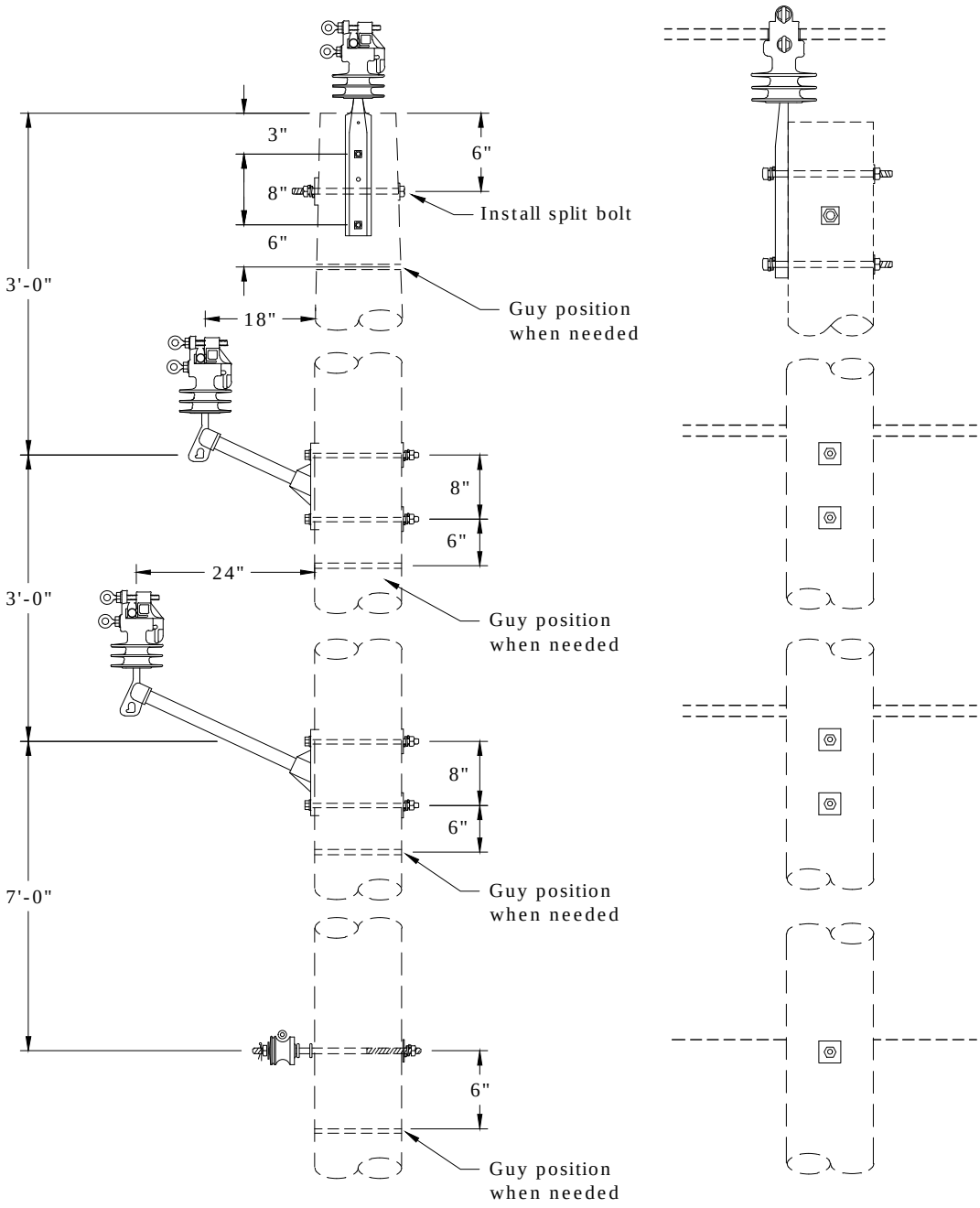

Notes:

1. Maximum line angle calculated for 5,000 lbs. MWT and 250-ft ruling span.
2. See Std AC - Avian Covers - Section 400 if needed. Covers only required on center phase.

Rev. 3 - Changed all insulators to vise-top, added avian note, and updated material list.

Clark Public Utilities

CONSTRUCTION STANDARDS

3Ø VERTICAL W/ POLE TOP
0° TO 5°
795 AAC MAX WIRE

REVISIONS

R	DATE	ENGR	OPS
1	3/02	REDRAWN	IN CAD
2	8/10/06	LB	AH
3	1/4/18	CM	DK

PAGE:		CAD FILE:	APP: ELM	SECTION
1 of 2	D13	D13	DATE: 1/31/80	340

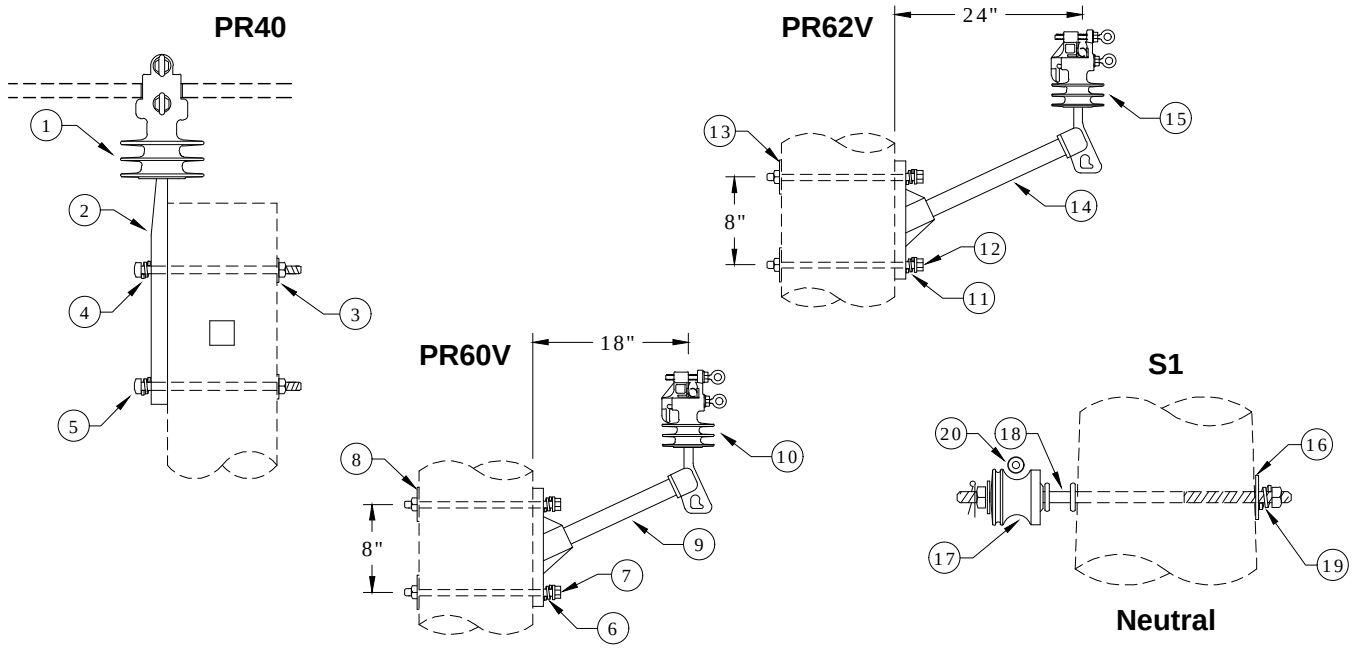

Rev. 3 - Changed all insulators to vise-top, added avian note, and updated material list.

D13

ITEM NO.	DESCRIPTION	PR40 QTY.	PR40 S/N
1	Insulator, Vise-Top, Polymer ✲	1	2439
2	Pin, Pole Top ✲	1	962
3	Washer, Curved, Square, Cast, 3" x 3" x 3/8" Thick x 13/16" Hole	2	1392
4	Washer, Lock, Spring, Double Coil, Galv., 5/8" ✲	2	2217
5	Bolt, Machine, 5/8" x 12", Galv., 12,400 lbs Ultimate Tensile ✲	2	155

ITEM NO.	DESCRIPTION	PR60V QTY.	PR60V S/N
6	Washer, Lock, Spring, Double Coil, Galv., 5/8"	2	2217
7	Bolt, Machine, 5/8" x 16" Galv., 12,400 lbs Ultimate Tensile	2	157
8	Washer, Curved, Square, Cast, 3" x 3" x 3/8" Thick x 13/16" Hole	2	1392
9	Arm, Epoxy 18" 2500 lbs	1	2504
10	Insulator, Vise-Top, Polymer	1	2439

ITEM NO.	DESCRIPTION	PR62V QTY.	PR62V S/N
11	Washer, Lock, Spring, Double Coil, Galv., 5/8"	2	2217
12	Bolt, Machine, 5/8" x 16", Galv., 12,400 lbs Ultimate Tensile	2	157
13	Washer, Curved, Square, Cast, 3" x 3" x 3/8" Thick x 13/16" Hole	2	1392
14	Arm, Epoxy 24" 2500 lbs	1	2605
15	Insulator, Vise-Top, Polymer	1	2439

ITEM NO.	DESCRIPTION	S1 QTY.	S1 S/N
16	Washer, Curved, Square, Cast, 3" x 3" x 3/8" Thick x 13/16" Hole	1	1392
17	Insulator, Spool, Clevis, Small, ANSI 53-2 Class	1	773
18	Bolt, Double Upset, 5/8" x 14", Galv., 12,400 lbs Ultimate Tensile ✲	1	1580
19	Washer, Lock, Spring, Double Coil, Galv., 5/8" ✲	1	2217
20	Wire, Tie, AL Annealed #4 SD	10	1421

Clark Public Utilities

CONSTRUCTION STANDARDS

3Ø VERTICAL W/ POLE TOP
0° TO 5°
795 AAC MAX WIRE

REVISIONS

R	DATE	ENGR	OPS
1	3/02	REDRAWN	IN CAD
2	8/10/06	LB	AH
3	1/4/18	CM	DK

PAGE: 2 of 2

D13

CAD FILE: D13

APP: ELM

DATE: 1/31/80

SECTION 340

Vise-Top Installation:

- 1st tighten the bottom bolt until ring breaks off
- 2nd tighten the top bolt until ring breaks off
- Remove bolts with socket stick
- Do not reuse bolts after rings have broken off

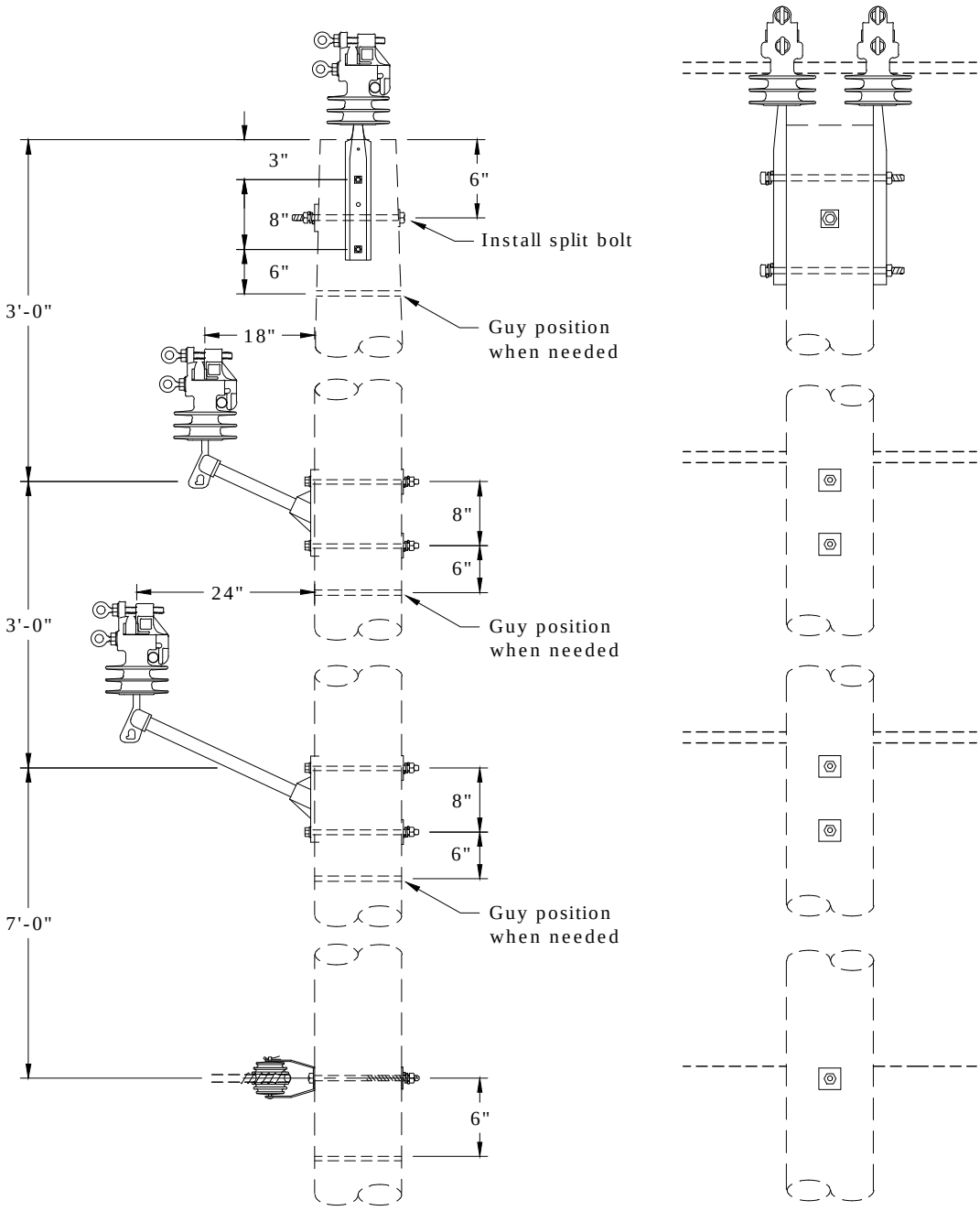

Notes:

1. Maximum line angle calculated for 5,000 lbs. MWT and 250-ft ruling span.
2. See Std AC - Avian Covers - Section 400 if needed. Covers only required on center phase.

Rev. 3 - Changed all insulators to vise-top, added avian note, and updated material list.

Clark Public Utilities

CONSTRUCTION STANDARDS

3Ø VERTICAL W/ DOUBLE POLE TOP
6° TO 15°
795 AAC MAX WIRE

REVISIONS

R	DATE	ENGR	OPS
1	3/02	REDRAWN	IN CAD
2	8/10/06	LB	AH
3	1/4/18	CM	DK

PAGE:		CAD FILE:	APP: ELM	SECTION
1 of 2	D14	D14	DATE: 1/31/80	340

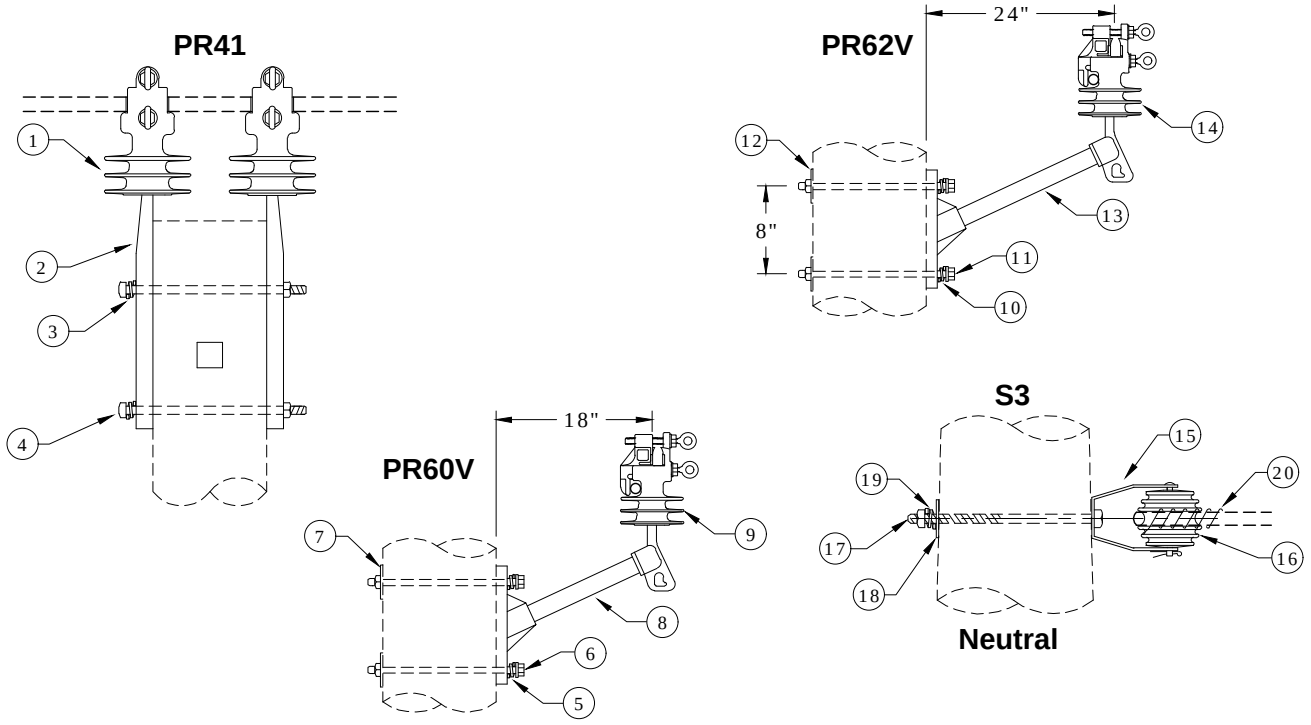

Rev. 3 - Changed all insulators to vise-top, added avian note, and updated material list.

ITEM NO.	DESCRIPTION	D14 PR41 QTY.	S/N
1	Insulator, Vise-Top, Polymer ✲	2	2439
2	Pin, Pole Top ✲	2	962
3	Washer, Lock, Spring, Double Coil, Galv., 5/8" ✲	2	2217
4	Bolt, Machine, 5/8" x 14", Galv., 12,400 lbs Ultimate Tensile ✲	2	156

ITEM NO.	DESCRIPTION	PR60V QTY.	S/N
5	Washer, Lock, Spring, Double Coil, Galv., 5/8"	2	2217
6	Bolt, Machine, 5/8" x 16", Galv., 12,400 lbs Ultimate Tensile	2	157
7	Washer, Curved, Square, Cast, 3" x 3" x 3/8" Thick x 13/16" Hole	2	1392
8	Arm, Epoxy 18" 2500 lbs	1	2504
9	Insulator, Vise-Top, Polymer	1	2439

ITEM NO.	DESCRIPTION	PR62V QTY.	S/N
10	Washer, Lock, Spring, Double Coil, Galv., 5/8"	2	2217
11	Bolt, Machine, 5/8" x 16", Galv., 12,400 lbs Ultimate Tensile	2	157
12	Washer, Curved, Square, Cast, 3" x 3" x 3/8" Thick x 13/16" Hole	2	1392
13	Arm, Epoxy 24" 2500 lbs	1	2605
14	Insulator, Vise-Top, Polymer	1	2439

ITEM NO.	DESCRIPTION	S3 QTY.	S/N
15	Clevis, DE Insulator 1344	1	336
16	Insulator, Spool, Clevis, Large, ANSI 53-5 Class	1	774
17	Bolt, Machine, 5/8" x 14", Galv., 12,400 lbs Ultimate Tensile ✲	1	156
18	Washer, Curved, Square, Cast, 3" x 3" x 3/8" Thick x 13/16" Hole	1	1392
19	Washer, Lock, Spring, Double Coil, Galv., 5/8" ✲	1	2217
20	Wire, Tie, AL Annealed #4 SD	10	1421

Clark Public Utilities

CONSTRUCTION STANDARDS

3Ø VERTICAL W/ DOUBLE POLE TOP
6° TO 15°
795 AAC MAX WIRE

REVISIONS

R	DATE	ENGR	OPS
1	3/02	REDRAWN	IN CAD
2	8/10/06	LB	AH
3	1/4/18	CM	DK

PAGE: 2 of 2

D14

CAD FILE: D14

APP: ELM

DATE: 1/31/80

SECTION 340

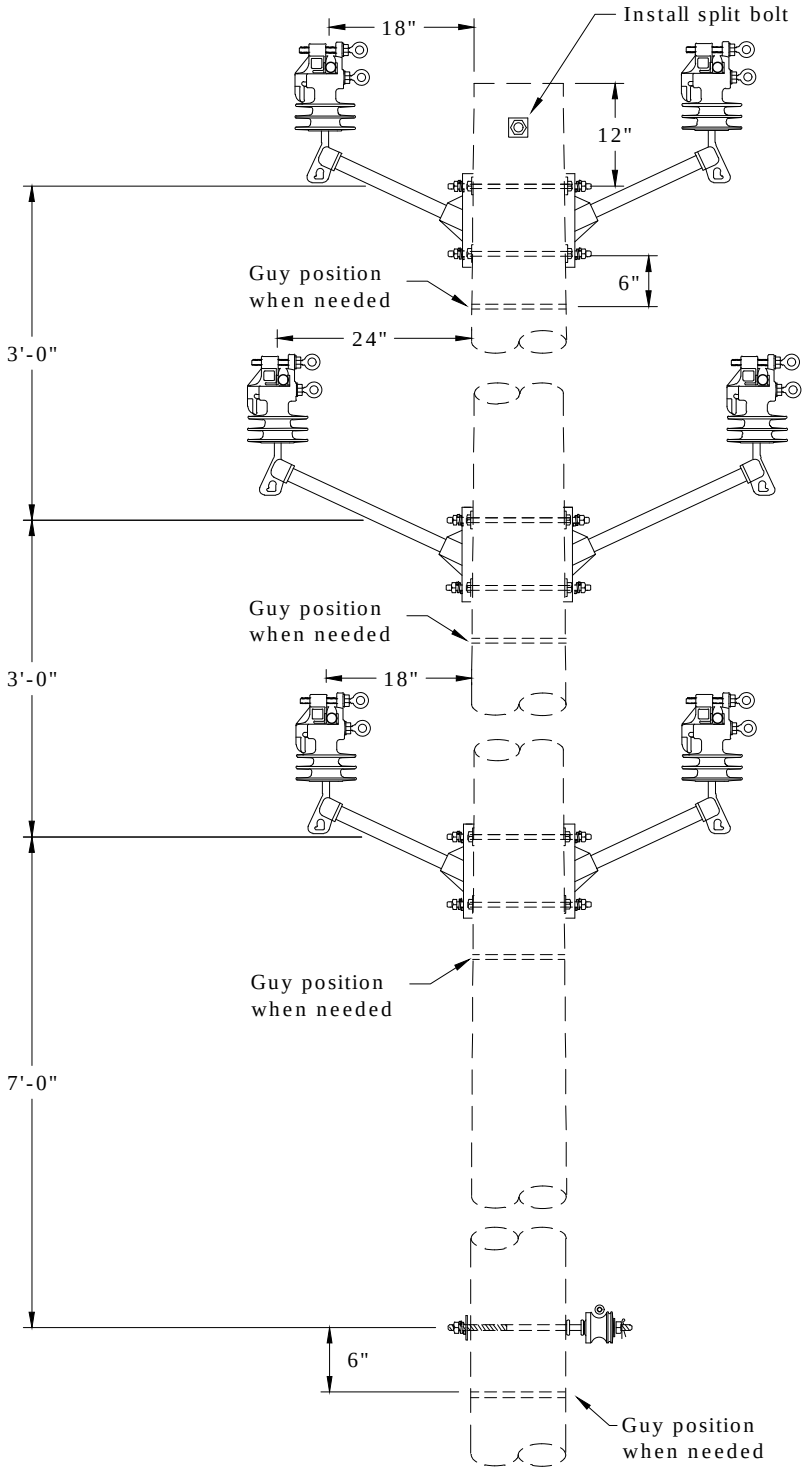

Vise-Top Installation:

- 1st tighten the bottom bolt until ring breaks off
- 2nd tighten the top bolt until ring breaks off
- Remove bolts with socket stick
- Do not reuse bolts after rings have broken off

Notes:

1. Maximum line angle calculated for 5,000 lbs. MWT and 250-ft ruling span.
2. See Std AC - Avian Covers - Section 400 if needed. Covers required on all three phases on one side of pole and center phase on opposite side.

Rev. 3 - Added avian note and changed to vise-top insulators on twiggy arms.

Clark Public Utilities

CONSTRUCTION STANDARDS

3Ø DOUBLE TWIGGY CIRCUIT
0° TO 5°
795 AAC MAX WIRE

REVISIONS

R	DATE	ENGR	OPS
1	3/02	REDRAWN	IN CAD
2	12/11/07	LB	AH
3	1/4/18	CM	DK

PAGE:		CAD FILE:	APP: ELM	SECTION
1 of 2	D16	D16	DATE: 1/31/80	340

PR61V

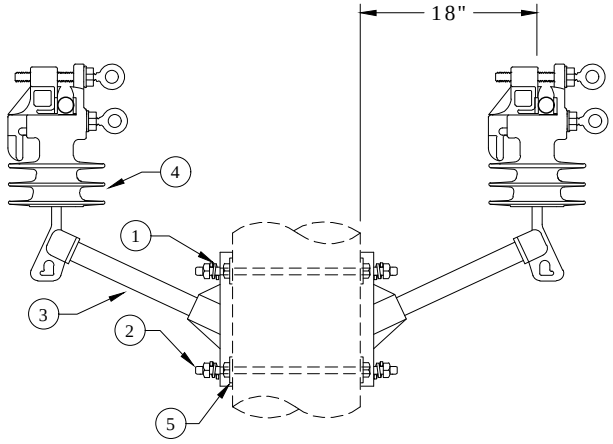

PR63V

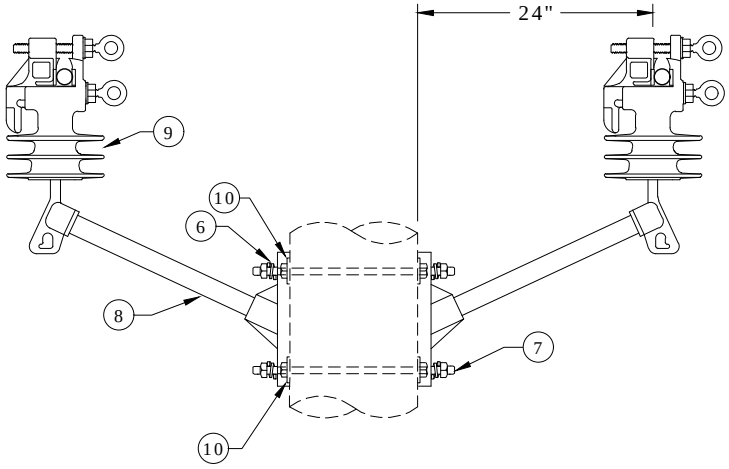

S1

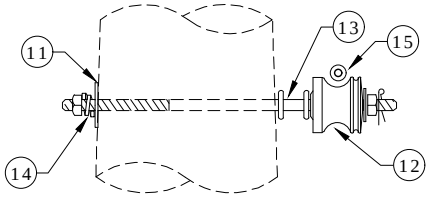

Neutral

Rev. 3 - Added avian note and changed to vise-top insulators on twiggy arms.

ITEM NO.	DESCRIPTION	D16 PR61V (2) QTY.	S/N
1	Washer, Lock, Spring, Double Coil, Galv., 5/8"	8	2217
2	Bolt, Double Arm, 5/8" x 18", Galv., 12,400 lbs Ultimate Tensile	4	82
3	Arm, Epoxy 18" 2500 lbs	4	2504
4	Insulator, Vise-Top, Polymer	4	2439
5	Washer, Flat, Round, Galv., 5/8"	8	1395

ITEM NO.	DESCRIPTION	PR63V QTY.	S/N
6	Washer, Lock, Spring, Double Coil, Galv., 5/8"	4	2217
7	Bolt, Double Arm, 5/8" x 18", Galv., 12,400 lbs Ultimate Tensile	2	82
8	Arm, Epoxy 24" 2500 lbs	2	2605
9	Insulator, Vise-Top, Polymer	2	2439
10	Washer, Flat, Round, Galv., 5/8"	4	1395

ITEM NO.	DESCRIPTION	S1 QTY.	S/N
11	Washer, Curved, Square, Cast, 3" x 3" x 3/8" Thick x 13/16" Hole	1	1392
12	Insulator, Spool, Clevis, Small, ANSI 53-2 Class	1	773
13	Bolt, Double Upset, 5/8" x 14", Galv., 12,400 lbs Ultimate Tensile ✡	1	1580
14	Washer, Lock, Spring, Double Coil, Galv., 5/8" ✡	1	2217
15	Wire, Tie, AL Annealed #4 SD	10	1421

Clark Public Utilities

CONSTRUCTION STANDARDS

3Ø DOUBLE TWIGGY CIRCUIT
0° TO 5°
795 AAC MAX WIRE

REVISIONS

R	DATE	ENGR	OPS
1	3/02	REDRAWN	IN CAD
2	12/11/07	LB	AH
3	1/4/18	CM	DK

PAGE: 2 of 2

D16

CAD FILE: D16

APP: ELM

DATE: 1/31/80

SECTION 340

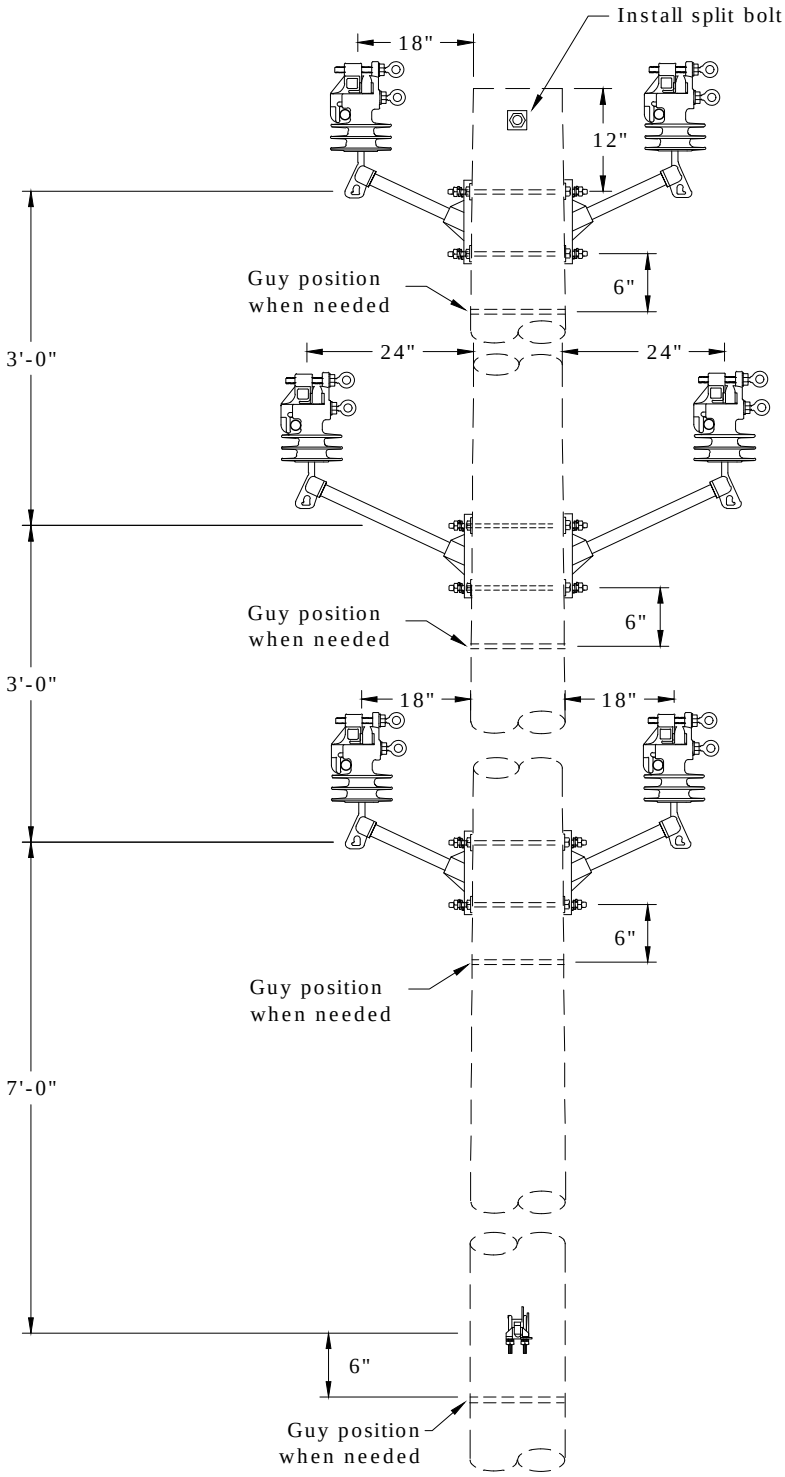

Vise-Top Installation:

- 1st tighten the bottom bolt until ring breaks off
- 2nd tighten the top bolt until ring breaks off
- Remove bolts with socket stick
- Do not reuse bolts after rings have broken off

Notes:

1. Maximum line angle calculated for 5,000 lbs. MWT and 250-ft ruling span.
2. See Std AC - Avian Covers - Section 400 if needed. Covers required on all three phases on one side of pole and center phase on opposite side of pole.

Rev. 3 - Added avian note and changed to vise-top insulators on twiggy arms.

Clark Public Utilities

CONSTRUCTION STANDARDS

3Ø DOUBLE TWIGGY CIRCUIT
6° TO 15°
795 AAC MAX WIRE

REVISIONS

R	DATE	ENGR	OPS
1	3/02	REDRAWN	IN CAD
2	8/10/06	LB	AH
3	1/4/18	CM	DK

PAGE:		CAD FILE:	APP: ELM	SECTION
1 of 2	D17	D17	DATE: 1/31/80	340

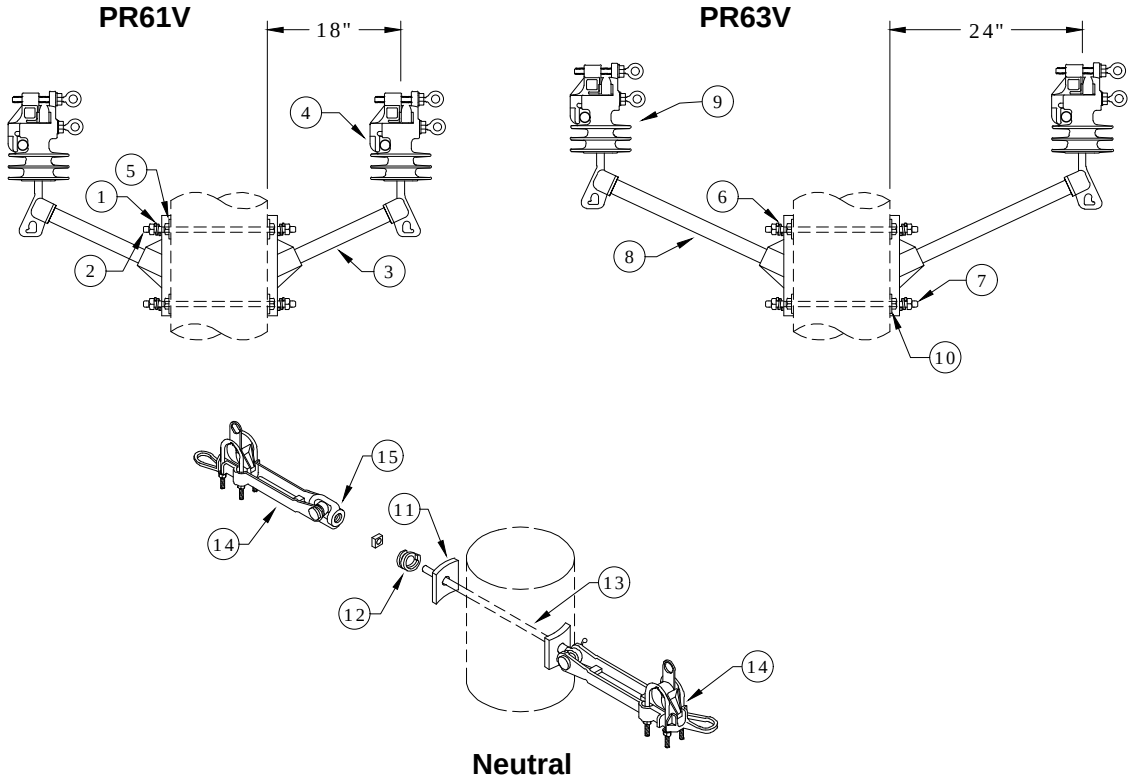

Rev. 3 - Added avian note and changed to vise-top insulators on twiggy arms.

ITEM NO.	DESCRIPTION	D17 PR61V (2) QTY.	S/N
1	Washer, Lock, Spring, Double Coil, Galv., 5/8"	8	2217
2	Bolt, Double Arm, 5/8" x 18", Galv., 12,400 lbs Ultimate Tensile	4	82
3	Arm, Epoxy 18" 2500 lbs	4	2504
4	Insulator, Vise-Top, Polymer	4	2439
5	Washer, Flat, Round, Galv., 5/8"	8	1395
ITEM NO.	**DESCRIPTION**	**PR63V QTY.**	**S/N**
6	Washer, Lock, Spring, Double Coil, Galv., 5/8"	4	2217
7	Bolt, Double Arm, 5/8" x 18", Galv., 12,400 lbs Ultimate Tensile	2	82
8	Arm, Epoxy 24" 2500 lbs	2	2605
9	Insulator, Vise-Top, Polymer	2	2439
10	Washer, Flat, Round, Galv., 5/8"	4	1395
ITEM NO.	**DESCRIPTION**	**Additional Material QTY.**	**S/N**
11	Washer, Curved, Square, Cast, 3" x 3" x 3/8" Thick x 13/16" Hole	2	1392
12	Washer, Lock, Spring, Double Coil, Galv., 5/8" ✡	1	2217
13	Bolt, Eye, 5/8" x 14", Galv., 12,400 lbs Ultimate Tensile ✡	1	108
14	Clamp, Strain, Distribution, 795	2	303
15	Nut, Eye, Oval, Galv., 5/8" ✡	1	913

Clark Public Utilities

CONSTRUCTION STANDARDS

3Ø DOUBLE TWIGGY CIRCUIT
6° TO 15°
795 AAC MAX WIRE

REVISIONS

R	DATE	ENGR	OPS
1	3/02	REDRAWN	IN CAD
2	8/10/06	LB	AH
3	1/4/18	CM	DK

PAGE:		CAD FILE:	APP: ELM	SECTION
2 of 2	D17	D17	DATE: 1/31/80	340

Vise-Top Notes:

- Tighten the bottom bolt until ring breaks off then, tighten the top bolt until ring breaks off
- Remove bolts with socket stick
- Do not reuse bolts after rings have broken off
- Replacement bolts are S/N 2888

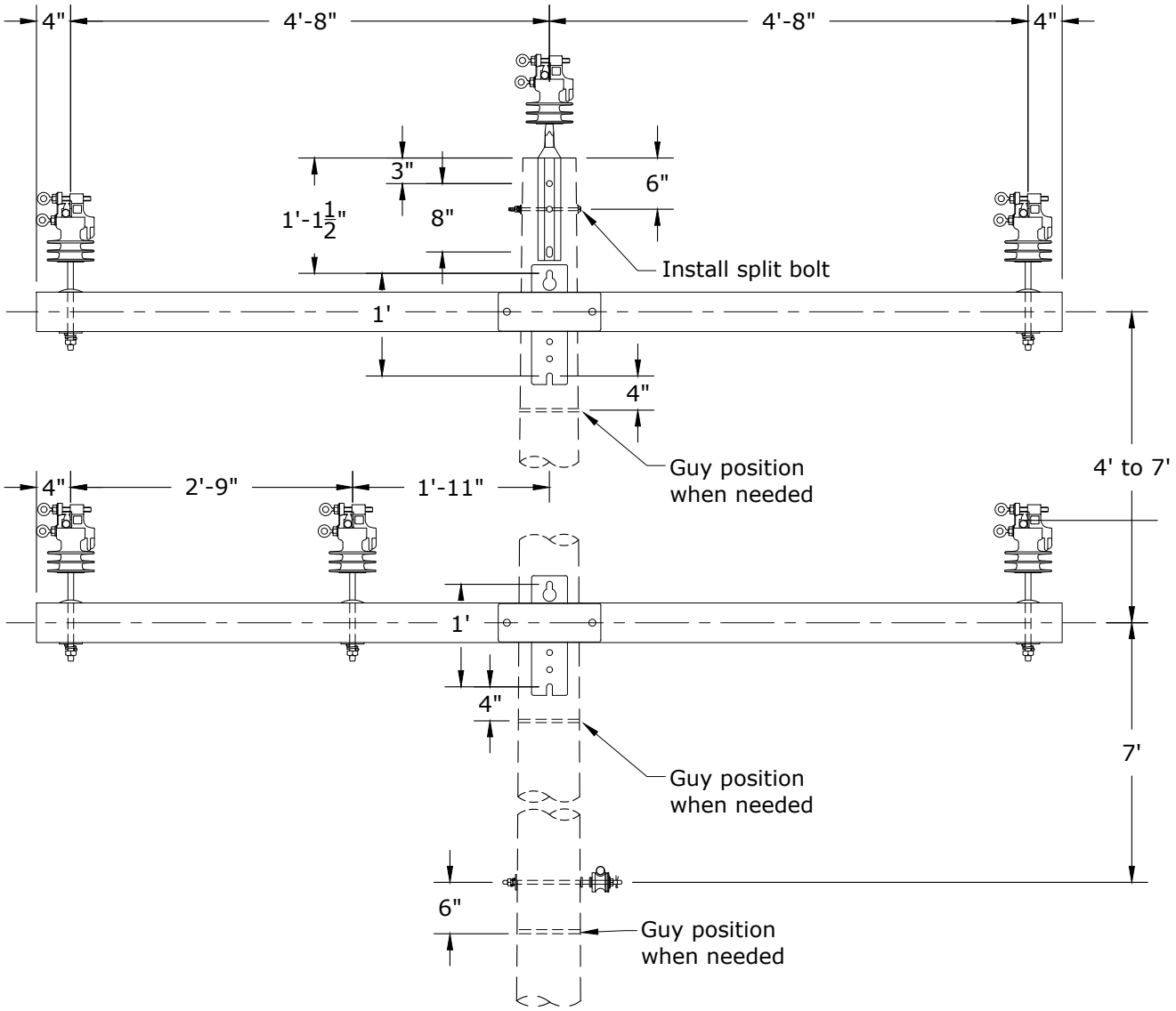

Notes:

1. Maximum line angle calculated for 5,000 lb MWT and 250-ft ruling span.
2. See Std AC - Avian Covers - Section 400 if needed. Covers only required on center phases.

Rev. 5 - Changed to fiberglass crossarms.

Clark Public Utilities

CONSTRUCTION STANDARDS

3Ø SINGLE 10' CROSSARM
DOUBLE CIRCUIT- 0° TO 5°
795 AAC MAX WIRE

REVISIONS

R	DATE	ENGR	OPS
2	3/02	REDRAWN	IN CAD
3	12/11/07	LB	AH
4	1/4/18	CM	DK
5	2/11/25	CM	GM

PAGE: 1 of 2

D19B

CAD FILE: D19B

APP: ELM
DATE: 1/31/80

SECTION 340

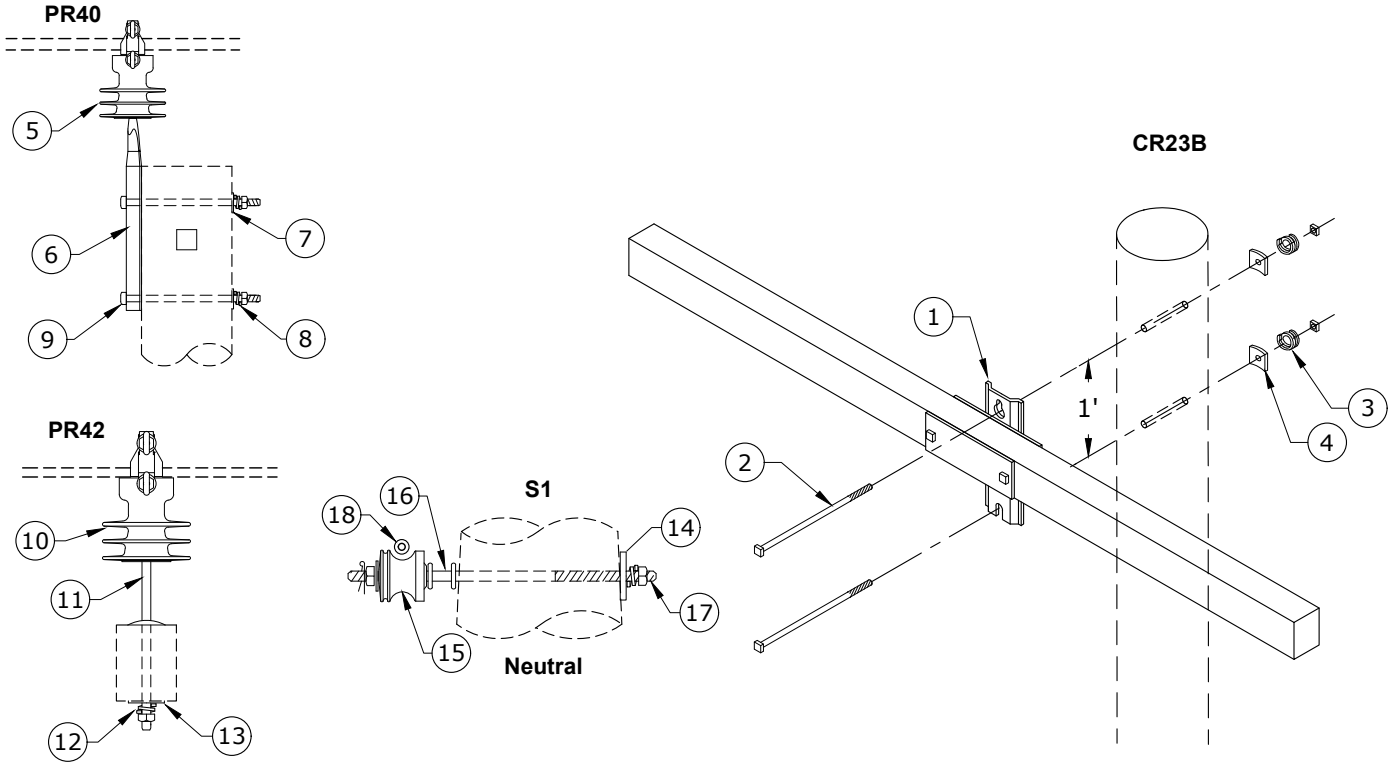

Rev. 5 - Changed to fiberglass crossarms.

ITEM NO	DESCRIPTION	D19B CR23B (2) ✲ QTY	S/N
1	Crossarm, Distribution, Fiberglass, 10' Long x 3-5/8" Wide x 4-5/8" High	2	3031
2	Bolt, Machine, 5/8" x 14", Galv, 12,400 lb Ultimate Tensile	4	156
3	Washer, Lock, Spring, Double Coil, Galv, 5/8"	4	2217
4	Washer, Curved, Square, Cast, 3" x 3" x 3/8" Thick x 13/16" Hole	4	1392
ITEM NO	**DESCRIPTION**	**PR40 QTY**	**S/N**
5	Insulator, Vise-Top, Polymer	1	2439
6	Pin, Pole Top	1	962
7	Washer, Curved, Square, Cast, 3" x 3" x 3/8" Thick x 13/16" Hole	2	1392
8	Washer, Lock, Spring, Double Coil, Galv, 5/8"	2	2217
9	Bolt, Machine, 5/8" x 12", Galv, 12,400 lb Ultimate Tensile	2	155
ITEM NO	**DESCRIPTION**	**PR42 (5) QTY**	**S/N**
10	Insulator, Vise-Top, Polymer	5	2439
11	Pin, Crossarm	5	961
12	Washer, Lock, Spring, Double Coil, Galv, 5/8"	5	2217
13	Washer, Square, Flat, 5/8", 2 1/4" x 2 1/4"	5	1412
ITEM NO	**DESCRIPTION**	**S1 QTY**	**S/N**
14	Washer, Curved, Square, Cast, 3" x 3" x 3/8" Thick x 13/16" Hole	1	1392
15	Insulator, Spool, Clevis, Small, ANSI 53-2 Class	1	773
16	Bolt, Double Upset, 5/8" x 14", Galv, 12,400 lb Ultimate Tensile	1	1580
17	Washer, Lock, Spring, Double Coil, Galv, 5/8"	1	2217
18	Wire, Tie, AL Annealed #4 SD	10	1421

Clark Public Utilities

CONSTRUCTION STANDARDS

3Ø SINGLE 10' CROSSARM
DOUBLE CIRCUIT- 0° TO 5°
795 AAC MAX WIRE

REVISIONS

R	DATE	ENGR	OPS
2	3/02	REDRAWN	IN CAD
3	12/11/07	LB	AH
4	1/4/18	CM	DK
5	2/11/25	CM	GM

PAGE: 2 of 2

D19B

CAD FILE: D19B

APP: ELM

DATE: 1/31/80

SECTION 340

Vise-Top Notes:

- Tighten the bottom bolt until ring breaks off then, tighten the top bolt until ring breaks off
- Remove bolts with socket stick
- Do not reuse bolts after rings have broken off
- Replacement bolts are S/N 2888

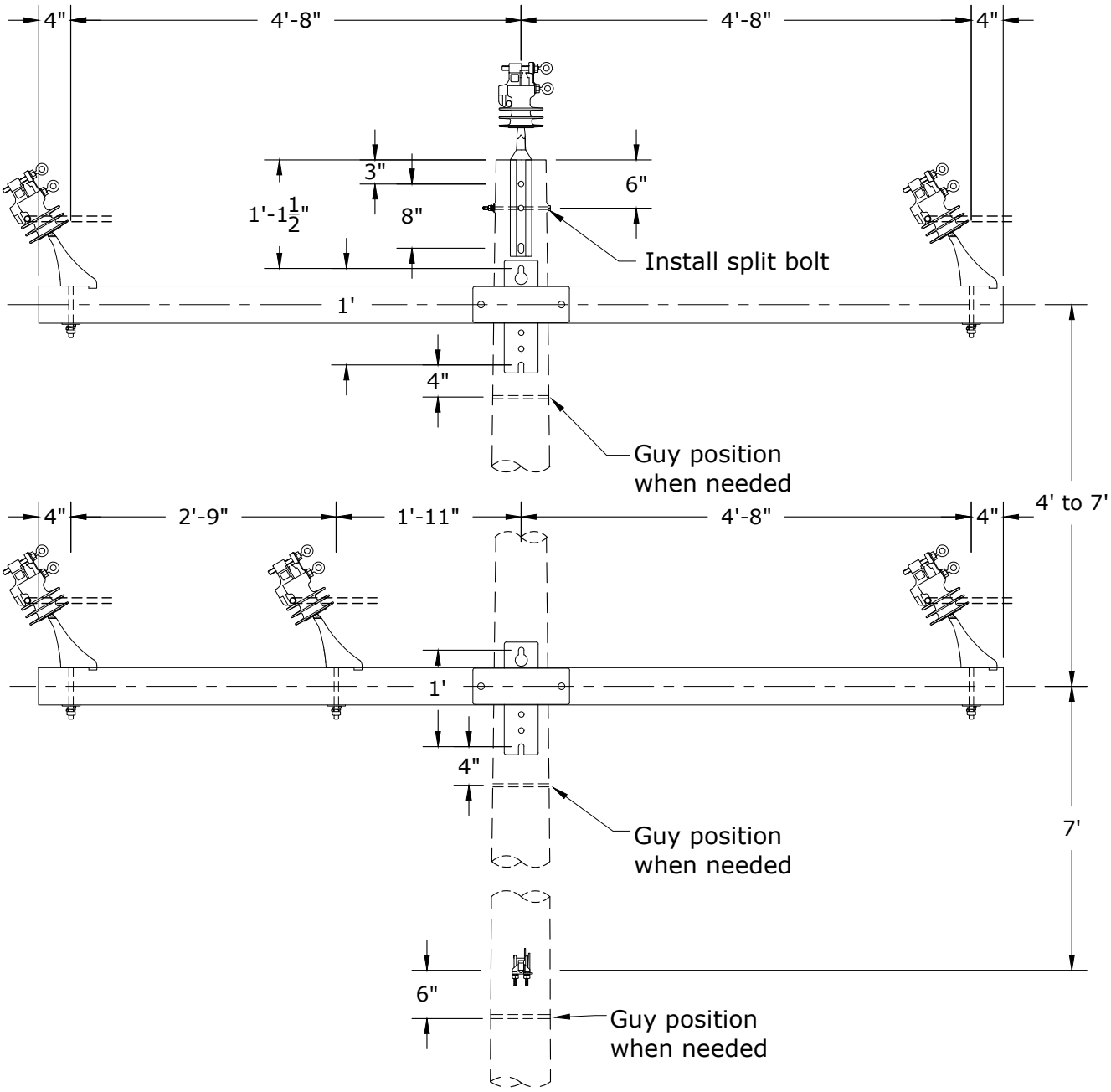

Notes:

1. Maximum line angle calculated for 5,000 lb MWT and 250-ft ruling span.
2. See Std AC - Avian Covers - Section 400 if needed. Covers only required on center phases.

Rev. 5 - Changed to single fiberglass crossarm with angle pins.

Clark Public Utilities

CONSTRUCTION STANDARDS

3Ø SINGLE 10' CROSSARM
DOUBLE CIRCUIT- 6° TO 15°
795 AAC MAX WIRE

REVISIONS

R	DATE	ENGR	OPS
2	3/02	REDRAWN	IN CAD
3	12/11/07	LB	AH
4	1/4/18	CM	DK
5	2/11/25	CM	GM

PAGE: 1 of 3

D20B

CAD FILE: D20B

APP: ELM
DATE: 1/31/80

SECTION 340

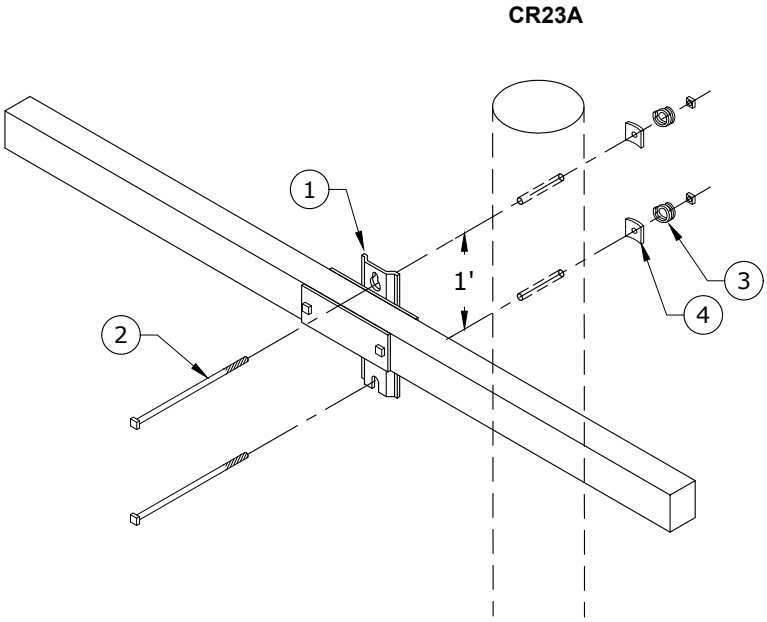

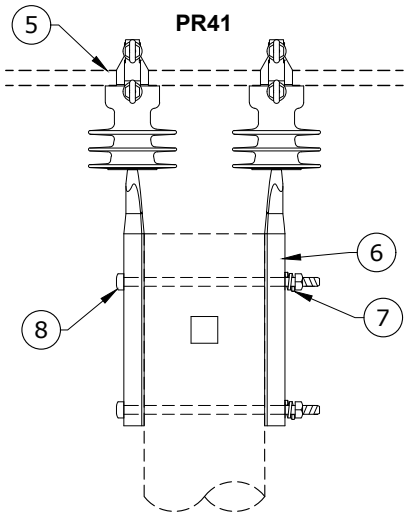

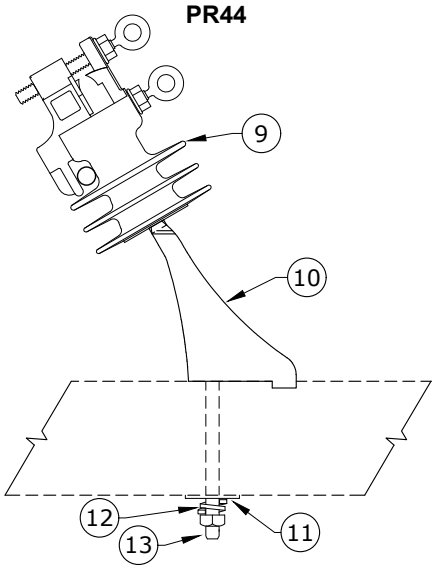

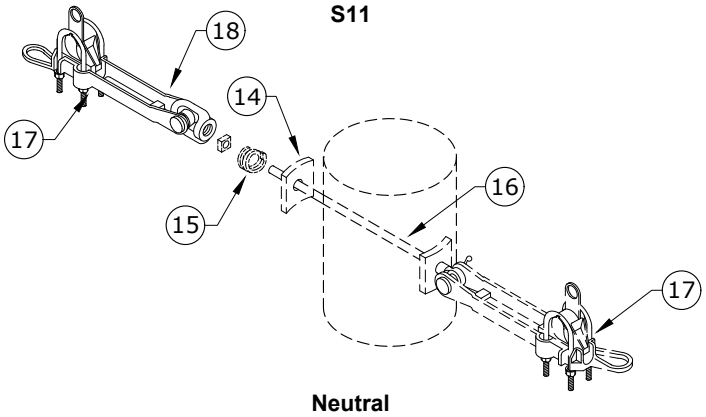

Rev. 5 - Changed to single fiberglass crossarm with angle pins.

Clark Public Utilities

CONSTRUCTION STANDARDS

3Ø SINGLE 10' CROSSARM
DOUBLE CIRCUIT- 6° TO 15°
795 AAC MAX WIRE

REVISIONS

R	DATE	ENGR	OPS
2	3/02	REDRAWN	IN CAD
3	12/11/07	LB	AH
4	1/4/18	CM	DK
5	2/11/25	CM	GM

PAGE: 2 of 3

D20B

CAD FILE: D20B

APP: ELM

DATE: 1/31/80

SECTION 340

Rev. 5 - Changed to single fiberglass crossarm with angle pins.

ITEM NO	DESCRIPTION	D20B CR23B (2) ✡ QTY	S/N
1	Crossarm, Distribution, Fiberglass, 10' Long x 3-5/8" Wide x 4-5/8" High	2	3031
2	Bolt, Machine, 5/8" x 14", Galv, 12,400 lb Ultimate Tensile	4	156
3	Washer, Lock, Spring, Double Coil, Galv, 5/8"	4	2217
4	Washer, Curved, Square, Cast, 3" x 3" x 3/8" Thick x 13/16" Hole	4	1392
ITEM NO	**DESCRIPTION**	**PR41 QTY**	**S/N**
5	Insulator, Vise-Top, Polymer	2	2439
6	Pin, Pole Top	2	962
7	Washer, Lock, Spring, Double Coil, Galv, 5/8"	2	2217
8	Bolt, Machine, 5/8" x 14", Galv, 12,400 lb Ultimate Tensile	2	156
ITEM NO	**DESCRIPTION**	**PR44 (5) QTY**	**S/N**
9	Insulator, Vise-Top, Polymer ✡	5	2439
10	Pin, Angle, Crossarm ✡	5	2658
11	Washer, Square, Flat, 5/8", 2 1/4" x 2 1/4"	5	1412
12	Washer, Lock, Spring, Double Coil, Galv, 5/8" ✡	5	2217
13	Bolt, Machine, 5/8" x 7", Galv, 12,400 lb Ultimate Tensile ✡	5	2606
ITEM NO	**DESCRIPTION**	**Additional Material QTY**	**S/N**
14	Washer, Curved, Square, Cast, 3" x 3" x 3/8" Thick x 13/16" Hole	2	1392
15	Washer, Lock, Spring, Double Coil, Galv, 5/8" ✡	1	2217
16	Bolt, Eye, 5/8" x 14", Galv, 12,400 lb Ultimate Tensile ✡	1	108
17	Clamp, Strain Distribution, 795	2	303
18	Nut, Eye Oval 5/8" Galv ✡	1	913

Clark Public Utilities

CONSTRUCTION STANDARDS

3Ø SINGLE 10' CROSSARM
DOUBLE CIRCUIT- 6° TO 15°
795 AAC MAX WIRE

REVISIONS

R	DATE	ENGR	OPS
2	3/02	REDRAWN	IN CAD
3	12/11/07	LB	AH
4	1/4/18	CM	DK
5	2/11/25	CM	GM

PAGE: 3 of 3

D20B

CAD FILE: D20B

APP: ELM
DATE: 1/31/80

SECTION 340

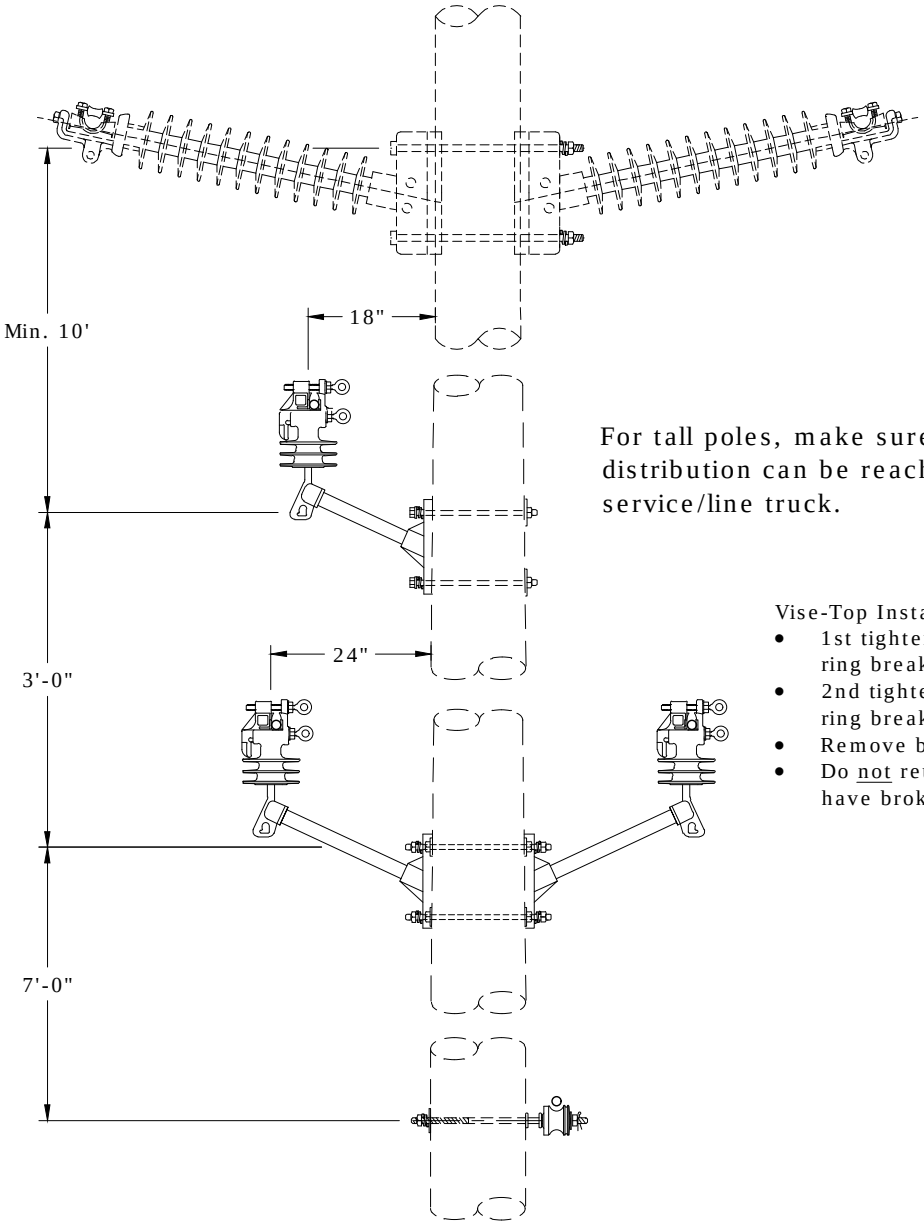

For tall poles, make sure the distribution can be reached by a service/line truck.

Vise-Top Installation:

- 1st tighten the bottom bolt until ring breaks off
- 2nd tighten the top bolt until ring breaks off
- Remove bolts with socket stick
- Do not reuse bolts after rings have broken off

Notes:

1. Maximum line angle calculated for 5,000 lbs. MWT and 250-ft ruling span.
2. See Std AC - Avian Covers - Section 400 if needed. Covers only required on top phase and one of the bottom phases of the distribution.

Clark Public Utilities

CONSTRUCTION STANDARDS

3Ø TWIGGY TRANSMISSION UNDERBUILD
0° TO 5°
795 AAC MAX WIRE

REVISIONS			
R	DATE	ENGR	OPS

PAGE:		CAD FILE:	APP: CM/DK	SECTION
1 of 2	D22	D22	DATE: 1/4/18	340

PR60V

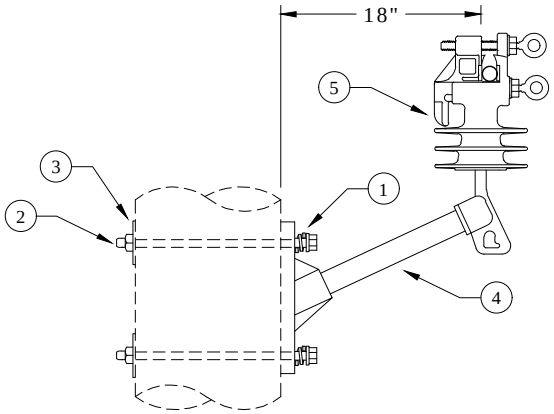

PR63V

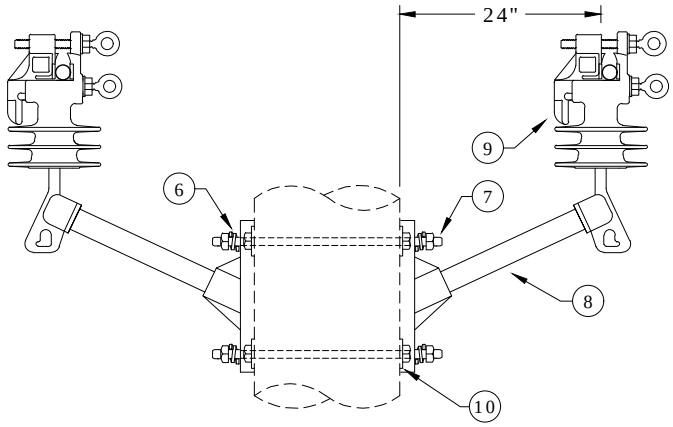

S1

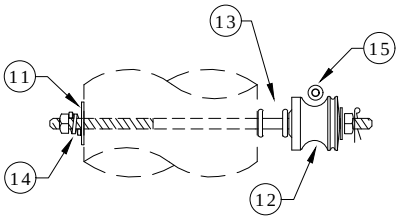

ITEM NO.	DESCRIPTION	D22 PR60V QTY.	S/N
1	Washer, Lock, Spring, Double Coil, Galv., 5/8"	2	2217
2	Bolt, Machine, 5/8" x 16", Galv., 12,400 lbs. Ultimate Tensile	2	157
3	Washer, Curved, Square, Cast, 3" x 3" x 3/8" Thick x 13/16" Hole	2	1392
4	Arm, Epoxy 18" 2500 lbs	1	2504
5	Insulator, Vise-Top, Polymer	1	2439

ITEM NO.	DESCRIPTION	PR63V QTY.	S/N
6	Washer, Lock, Spring, Double Coil, Galv., 5/8"	4	2217
7	Bolt, Double Arm, 5/8" x 18," Galv., 12,400 lbs Ultimate Tensile	2	82
8	Arm, Epoxy 24" 2500 lbs	2	2605
9	Insulator, Vise-Top, Polymer	2	2439
10	Washer, Flat, Round, Galv., 5/8"	4	1395

ITEM NO.	DESCRIPTION	S1 QTY.	S/N
11	Washer, Curved, Square, Cast, 3" x 3" x 3/8" Thick x 13/16" Hole	1	1392
12	Insulator, Spool, Clevis, Small, ANSI 53-2 Class	1	773
13	Bolt, Double Upset, 5/8" x 14", Galv., 12,400 lbs. Ultimate Tensile	1	1580
14	Washer, Lock, Spring, Double Coil, 5/8"	1	2217
15	Wire, Tie, AL Annealed #4 SD	10	1421

Clark Public Utilities

CONSTRUCTION STANDARDS

3Ø TWIGGY TRANSMISSION UNDERBUILD
0° TO 5°
795 AAC MAX WIRE

REVISIONS

R	DATE	ENGR	OPS

PAGE: 2 of 2

D22

CAD FILE: D22

APP: CM/DK
DATE: 1/4/18

SECTION 340

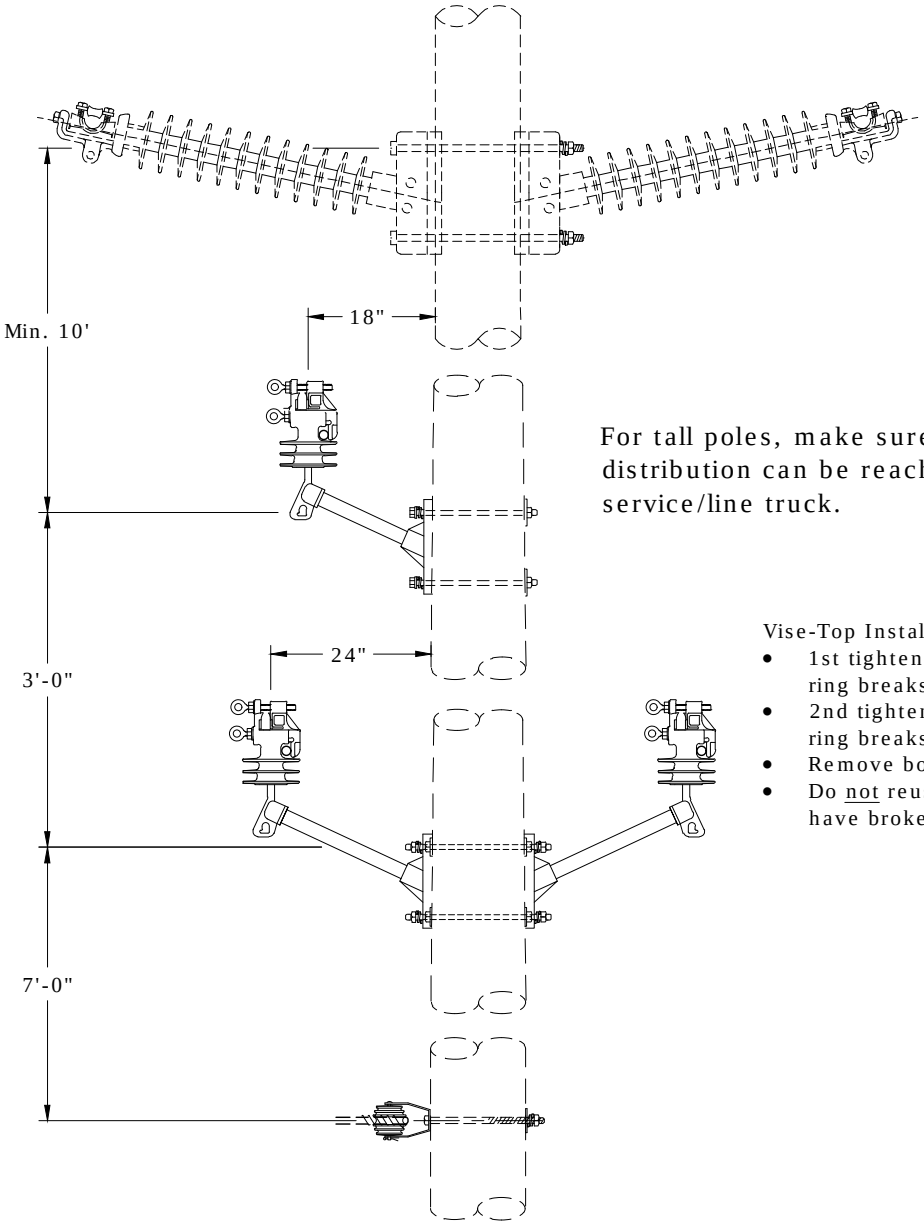

For tall poles, make sure the distribution can be reached by a service/line truck.

Vise-Top Installation:

- 1st tighten the bottom bolt until ring breaks off
- 2nd tighten the top bolt until ring breaks off
- Remove bolts with socket stick
- Do not reuse bolts after rings have broken off

Notes:

1. Maximum line angle calculated for 5,000 lbs. MWT and 250-ft ruling span.
2. See Std AC - Avian Covers - Section 400 if needed. Covers only required on top phase and one of the bottom phases of the distribution.

Clark Public Utilities

CONSTRUCTION STANDARDS

3Ø TWIGGY TRANSMISSION UNDERBUILD
6° TO 15°
795 AAC MAX WIRE

REVISIONS			
R	DATE	ENGR	OPS

PAGE:		CAD FILE:	APP: CM/DK	SECTION
1 of 2	D23	D23	DATE: 1/4/18	340

PR60V

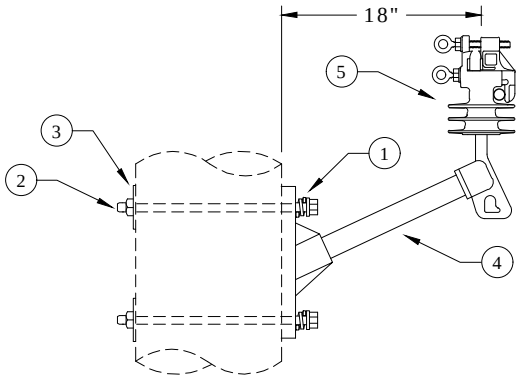

PR63V

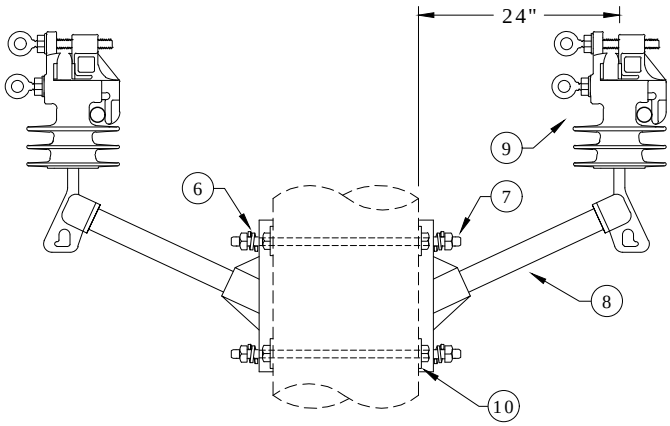

S3

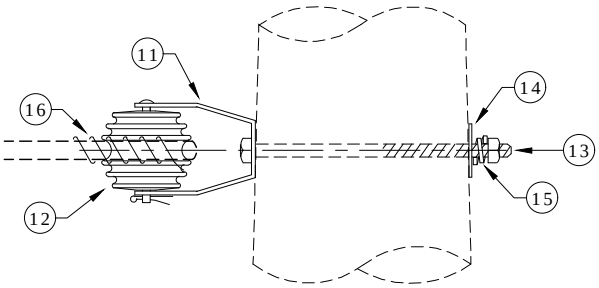

ITEM NO.	DESCRIPTION	D23 PR60V QTY.	S/N
1	Washer, Lock, Spring, Double Coil, Galv., 5/8"	2	2217
2	Bolt, Machine, 5/8" x 16", Galv., 12,400 lbs. Ultimate Tensile	2	157
3	Washer, Curved, Square, Cast, 3" x 3" x 3/8" Thick x 13/16" Hole	2	1392
4	Arm, Epoxy 18" 2500 lbs	1	2504
5	Insulator, Vise-Top, Polymer	1	2439
ITEM NO.	**DESCRIPTION**	**PR63V QTY.**	**S/N**
6	Washer, Lock, Spring, Double Coil, Galv., 5/8"	4	2217
7	Bolt, Double Arm, 5/8" x 18", Galv., 12,400 lbs Ultimate Tensile	2	82
8	Arm, Epoxy 24" 2500 lbs	2	2605
9	Insulator, Vise-Top, Polymer	2	2439
10	Washer, Flat, Round, Galv., 5/8"	4	1395
ITEM NO.	**DESCRIPTION**	**S3 QTY.**	**S/N**
11	Clevis, DE Insulator 1344	1	336
12	Insulator, Spool, Clevis, Large, ANSI 53-5 Class	1	774
13	Bolt, Machine, 5/8" x 14", Galv., 12,400 lbs Ultimate Tensile ✲	1	156
14	Washer, Curved, Square, Cast, 3" x 3" x 3/8" Thick x 13/16" Hole	1	1392
15	Washer, Lock, Spring, Double Coil, Galv., 5/8" ✲	1	2217
16	Wire, Tie, AL Annealed #4 SD	10	1421

Clark Public Utilities

CONSTRUCTION STANDARDS

3Ø TWIGGY TRANSMISSION UNDERBUILD
6° TO 15°
795 AAC MAX WIRE

REVISIONS			
R	DATE	ENGR	OPS

D23

CAD FILE: D23

APP: CM/DK
DATE: 1/4/18

SECTION 340

FRONT VIEW

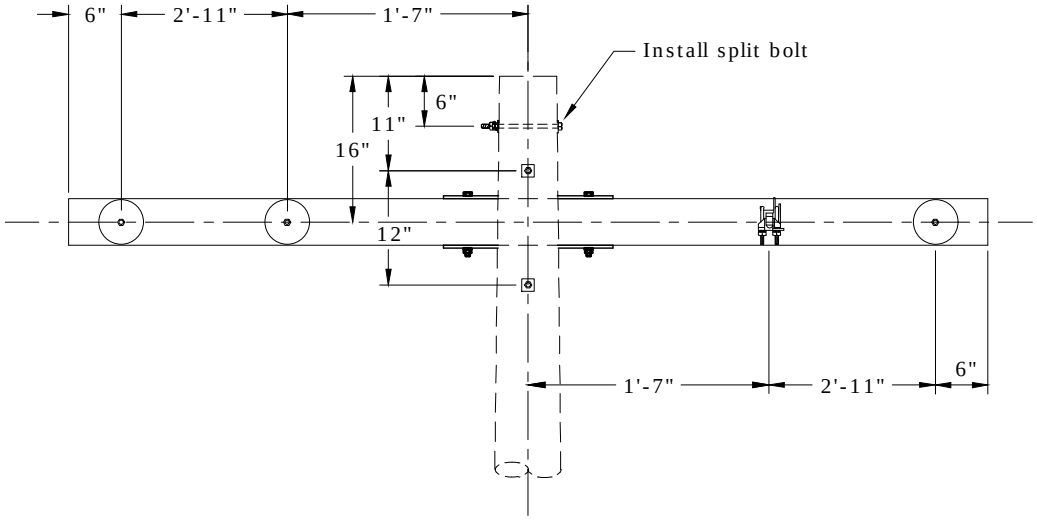

TOP VIEW

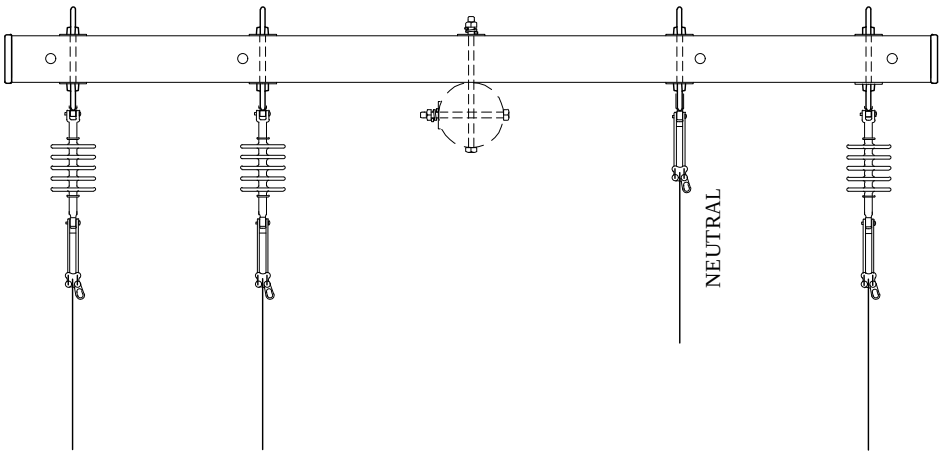

Notes:

1. This framing is for clearance limited situations only.
2. See Std AC - Avian Covers - Section 400 if needed. Covers only required on center phase and phase on neutral side.

Rev. 1 - Added avian note and updated material list.

Clark Public Utilities

CONSTRUCTION STANDARDS

10' PRE-ASSEMBLED DEADEND
HIGH NEUTRAL
795 AAC MAX WIRE

REVISIONS

R	DATE	ENGR	OPS
1	1/4/18	CM	DK

PAGE: 1 of 2

D48B

CAD FILE: D48B

APP: LB/AH
DATE: 12/11/07

SECTION 340

CR29B

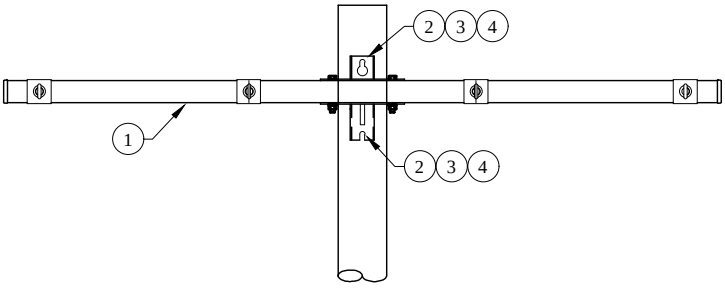

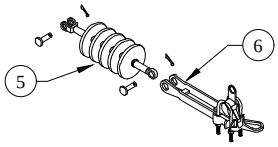

Phases

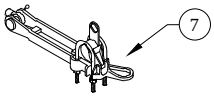

Neutral

Rev. 1 - Added avian note and updated material list.

ITEM NO.	DESCRIPTION	D48B CR29B QTY.	S/N
1	Arm, Deadend Assembly, 10', 4-position, 336 & 795	1	2668
2	Bolt, Machine, 3/4" x 14", Galv., 18,350 lbs Ultimate Tensile ✲	2	174
3	Washer, Lock, Spring, Double Coil, Galv., 3/4" ✲	2	2218
4	Washer, Curved, Square, Cast, 3" x 3" x 3/8" Thick x 13/16" Hole	2	1392
ITEM NO.	DESCRIPTION	Additional Material QTY.	S/N
5	Insulator, Suspension, 15 kV Clevis-Tongue, Polymer ✲	3	1967
6	Clamp, Strain, Distribution 795 AAC	3	303
7	Clamp, Strain, Distribution #2 - 397.5	1	302

Clark Public Utilities

CONSTRUCTION STANDARDS

10' PRE-ASSEMBLED DEADEND
HIGH NEUTRAL
795 AAC MAX WIRE

REVISIONS

R	DATE	ENGR	OPS
1	1/4/18	CM	DK

PAGE: 2 of 2

D48B

CAD FILE: D48B

APP: LB/AH
DATE: 12/11/07

SECTION 340

FRONT VIEW

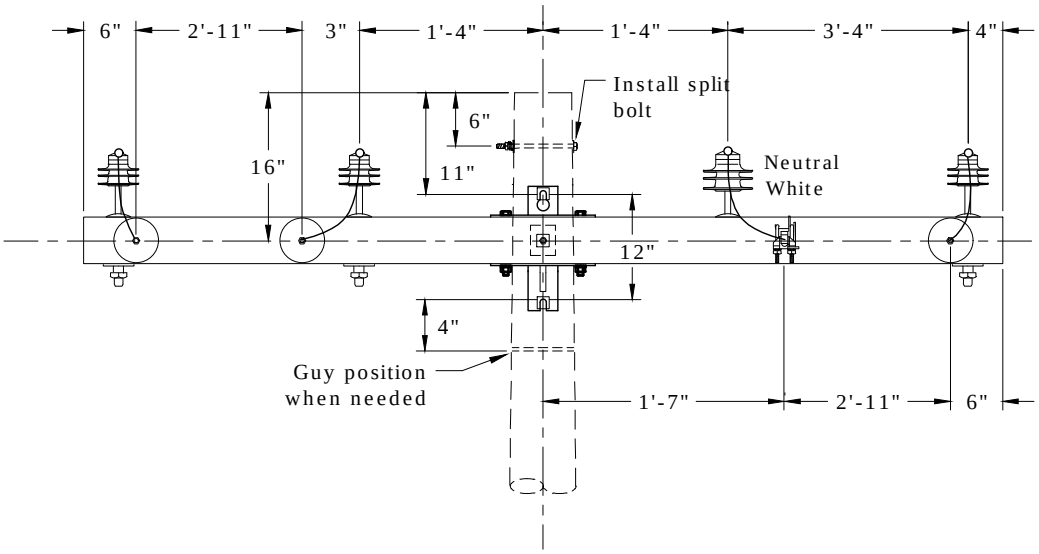

TOP VIEW

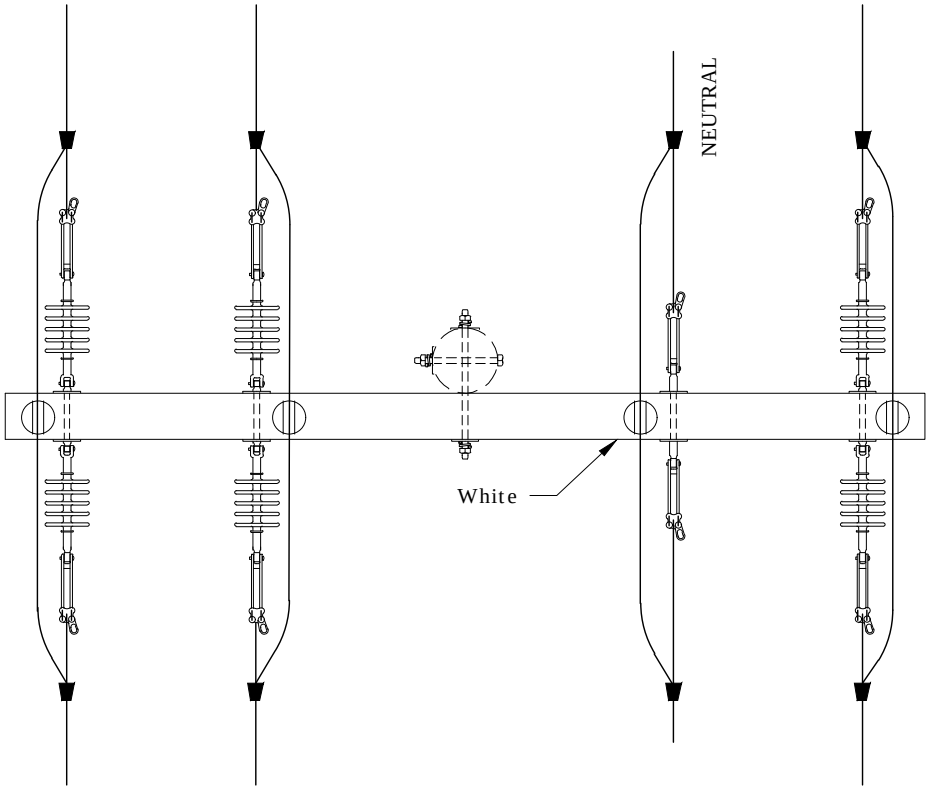

Notes:

1. This framing is for clearance limited situations only.
2. See Std AC - Avian Covers - Section 400 if needed. Covers and tree wire jumpers required on center phase and phase on neutral side.

Rev. 1 - Added avian note, changed from porcelain to polymer insulators, and updated material list.

Clark Public Utilities

CONSTRUCTION STANDARDS

10' PRE-ASSEMBLED DOUBLE DEADEND
HIGH NEUTRAL
795 AAC MAX WIRE

REVISIONS

R	DATE	ENGR	OPS
1	1/4/18	CM	DK

PAGE: 1 of 3

D49B

CAD FILE: D49B

APP: LB/AH
DATE: 12/11/07

SECTION 340

DEADEND FOR ANGLED SPANS

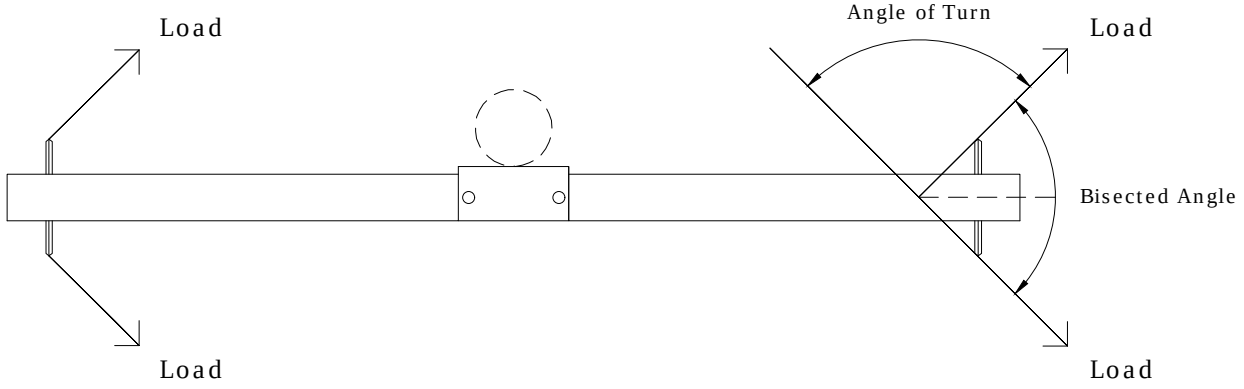

Notes:

1. Maximum angle with 795 is 30º, limited by the 3/4" machine bolt.
2. Angle must be bisected so that each eye-nut has half the angle.

Clark Public Utilities

CONSTRUCTION STANDARDS

10' PRE-ASSEMBLED DOUBLE DEADEND
HIGH NEUTRAL
795 AAC MAX WIRE

REVISIONS

R	DATE	ENGR	OPS
1	1/4/18	CM	DK

PAGE: 2 of 3

D49B

CAD FILE: D49B

APP: LB/AH

DATE: 12/11/07

SECTION 340

CR29B

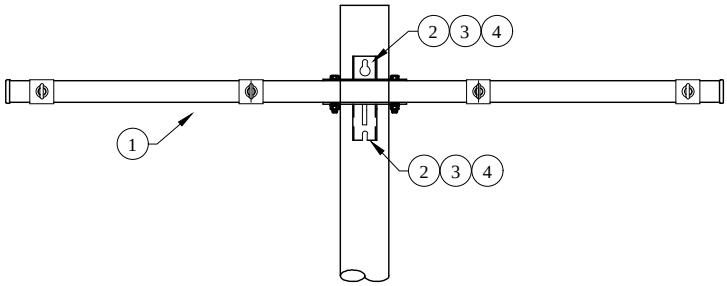

PR4

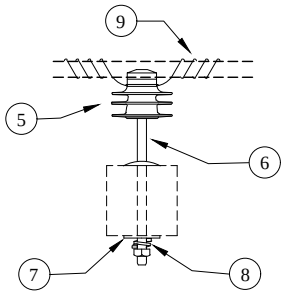

S12

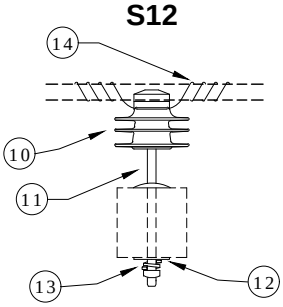

Neutral

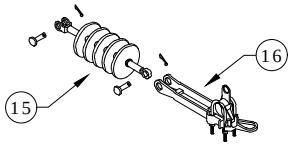

Phases

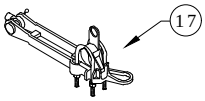

Neutral

Rev. 1 - Added avian note, changed from porcelain to polymer insulators, and updated material list.

ITEM NO.	DESCRIPTION	D49B CR29B QTY.	S/N
1	Arm, Deadend Assembly, 10', 4-position, 336 & 795	1	2668
2	Bolt, Machine, 3/4" x 14", Galv., 18,350 lbs Ultimate Tensile ✡	2	174
3	Washer, Lock, Spring, Double Coil, Galv., 3/4" ✡	2	2218
4	Washer, Curved, Square, Cast, 3" x 3" x 3/8" Thick x 13/16" Hole	2	1392
ITEM NO.	**DESCRIPTION**	**PR4 (3) QTY.**	**S/N**
5	Insulator, Pin, C Neck, Polymer ✡	3	1968
6	Pin, Crossarm	3	961
7	Washer, Square, Flat 5/8", 2 1/4" x 2 1/4"	3	1412
8	Washer, Lock, Spring, Double Coil, Galv., 5/8" ✡	3	2217
9	Wire, Tie, AL Annealed #4 SD	30	1421
ITEM NO.	**DESCRIPTION**	**S12 QTY.**	**S/N**
10	Insulator, Pin, C Neck, White Polymer ✡	1	2656
11	Pin, Crossarm	1	961
12	Washer, Square, Flat, 5/8", 2 1/4" x 2 1/4"	1	1412
13	Washer, Lock, Spring, Double Coil, Galv., 5/8" ✡	1	2217
14	Wire, Tie, AL Annealed #4 SD	10	1421
ITEM NO.	**DESCRIPTION**	**Additional Material QTY.**	**S/N**
15	Insulator, Suspension, 15 kV Clevis-Tongue, Polymer ✡	6	1967
16	Clamp, Strain, Distribution, 795	6	303
17	Clamp, Strain, Distribution, #2 - 397.5	2	302
18	Connector, Tap, Wedge, 795 to 795 ✡	6	2477
19	Connector, Tap, Wedge, 397 to 397 ✡	2	2501

Clark Public Utilities

CONSTRUCTION STANDARDS

10' PRE-ASSEMBLED DOUBLE DEADEND
HIGH NEUTRAL
795 AAC MAX WIRE

REVISIONS

R	DATE	ENGR	OPS
1	1/4/18	CM	DK

PAGE: 3 of 3

D49B

CAD FILE: D49B

APP: LB/AH
DATE: 12/11/07

SECTION 340

FRONT VIEW

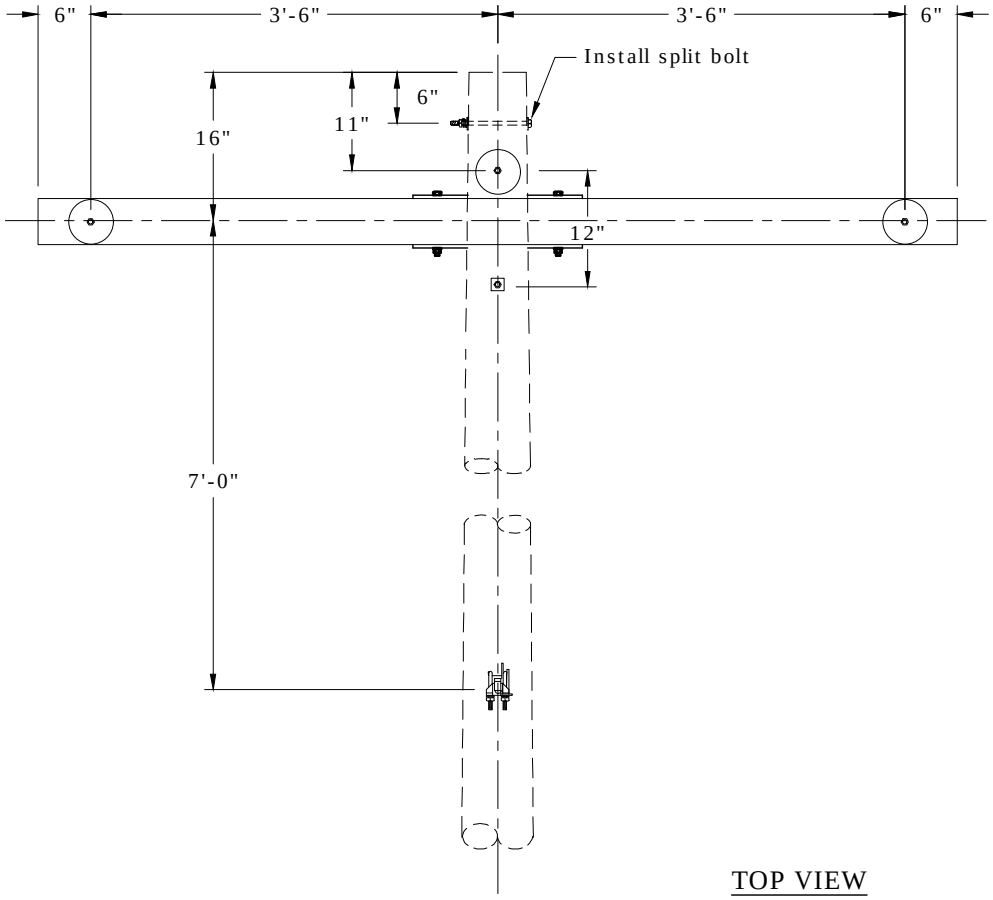

TOP VIEW

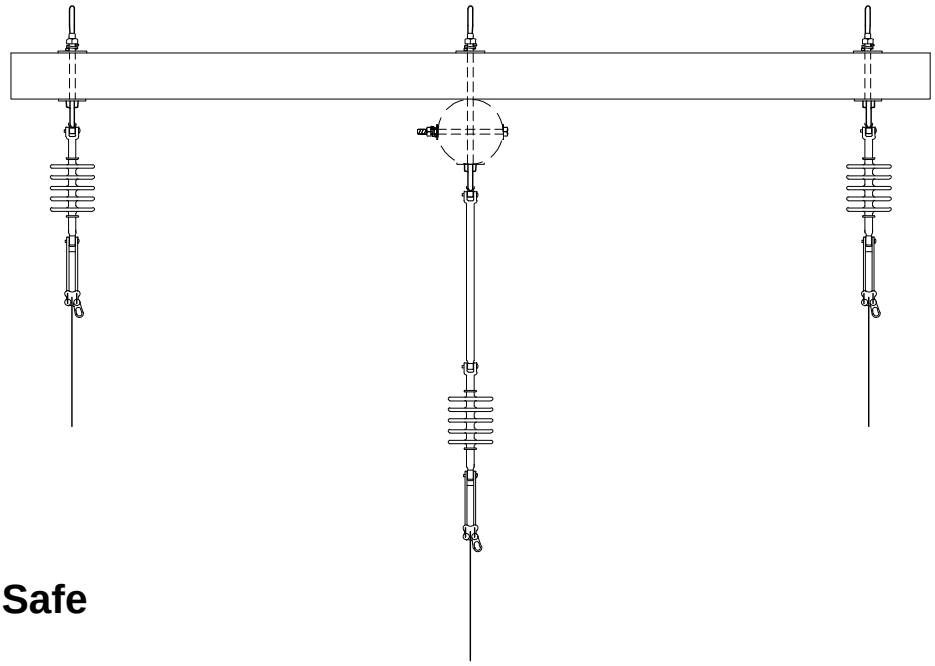

Avian Safe

Rev. 4 - Added avian note and updated material list.

Clark Public Utilities

CONSTRUCTION STANDARDS

8' PRE-ASSEMBLED DEADEND
795 AAC MAX WIRE

REVISIONS

R	DATE	ENGR	OPS
1	2/11/81	GGW	
2	3/02	REDRAWN	IN CAD
3	12/11/07	LB	AH
4	1/4/18	CM	DK

PAGE:		CAD FILE:	APP: ELM	SECTION
1 of 2	D50A	D50A	DATE: 1/31/80	340

CR28A

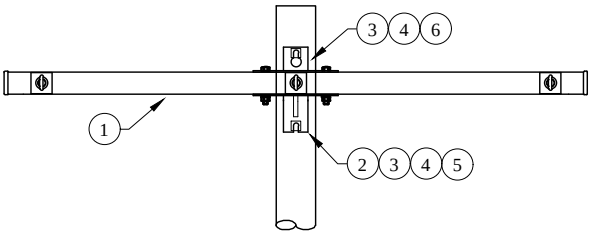

S10

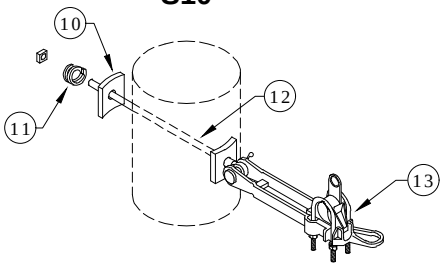

Neutral

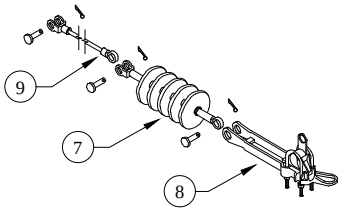

Middle Phase

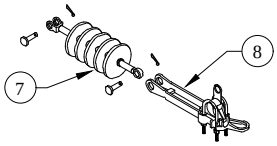

Outside Phases

Rev. 4 - Added avian note and updated material list.

ITEM NO.	DESCRIPTION	D50A CR28A QTY.	S/N
1	Arm, Deadend Assembly, 3-position, 336 & 795	1	2509
2	Bolt, Machine, 3/4" x 14", Galv., 18,350 lbs Ultimate Tensile ✡	1	174
3	Washer, Lock, Spring, Double Coil, Galv., 3/4" ✡	2	2218
4	Washer, Curved, Square, Cast, 3" x 3" x 3/8" Thick x 13/16" Hole	2	1392
5	Nut, Eye Oval 3/4", Galv.	1	914
6	Bolt, Machine, 3/4" x 16", Galv., 18,350 lbs Ultimate Tensile ✡	1	175
ITEM NO.	**DESCRIPTION**	**Additional Material QTY.**	**S/N**
7	Insulator, Suspension, 15 KV Clevis-Tongue, Polymer ✡	3	1967
8	Clamp, Strain, Distribution, 795 AAC	3	303
9	Insulator, Guy Strain, Fiberglass, 20" ✡	1	2909 ✡
ITEM NO.	**DESCRIPTION**	**S10 QTY.**	**S/N**
10	Washer, Curved, Square, Cast, 3" x 3" x 3/8" Thick x 13/16" Hole	2	1392
11	Washer, Lock, Spring, Double Coil, Galv., 5/8"✡	1	2217
12	Bolt, Eye, 5/8" x 14", Galv., 12,400 lbs Ultimate Tensile ✡	1	108
13	Clamp, Strain, Distribution, #2 - 397.5	1	302

Clark Public Utilities

CONSTRUCTION STANDARDS

8' PRE-ASSEMBLED DEADEND
795 AAC MAX WIRE

REVISIONS

R	DATE	ENGR	OPS
1	2/11/81	GGW	
2	3/02	REDRAWN	IN CAD
3	12/11/07	LB	AH
4	1/4/18	CM	DK

PAGE: 2 of 2

D50A

CAD FILE: D50A

APP: ELM

DATE: 1/31/80

SECTION 340

FRONT VIEW

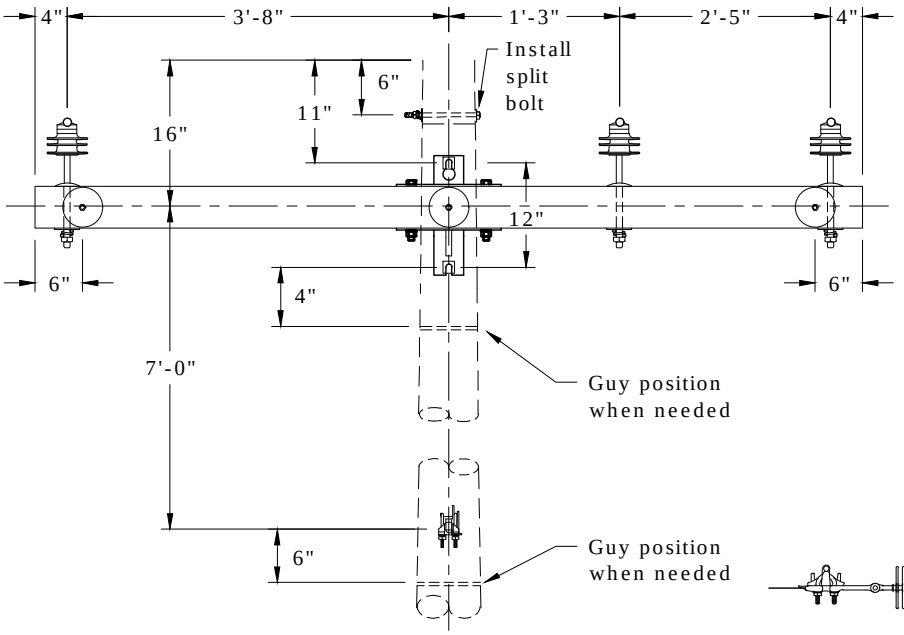

SIDE VIEW

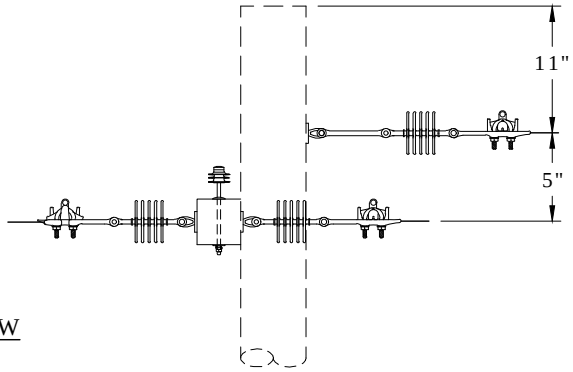

TOP VIEW

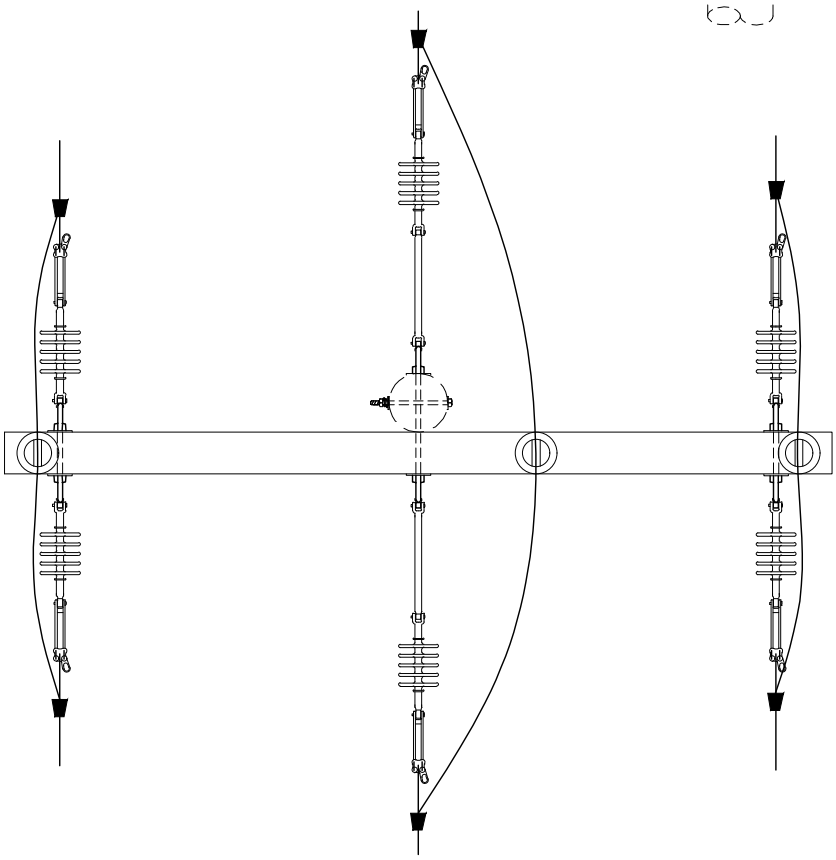

Note: See Std AC - Avian Covers - Section 400 if needed. Covers and tree wire jumper only required on center phase.

Rev. 4 - Added avian note, changed from porcelain to polymer insulators, and updated material list.

Clark Public Utilities

CONSTRUCTION STANDARDS

8' PRE-ASSEMBLED DOUBLE DEADEND
795 AAC MAX WIRE

REVISIONS

R	DATE	ENGR	OPS
1	2/11/81	GGW	
2	3/02	REDRAWN	IN CAD
3	12/11/07	LB	AH
4	1/4/18	CM	DK

PAGE: 1 of 4

D51A

CAD FILE: D51A

APP: ELM

DATE: 1/31/80

SECTION 340

DEADEND FOR ANGLED SPANS

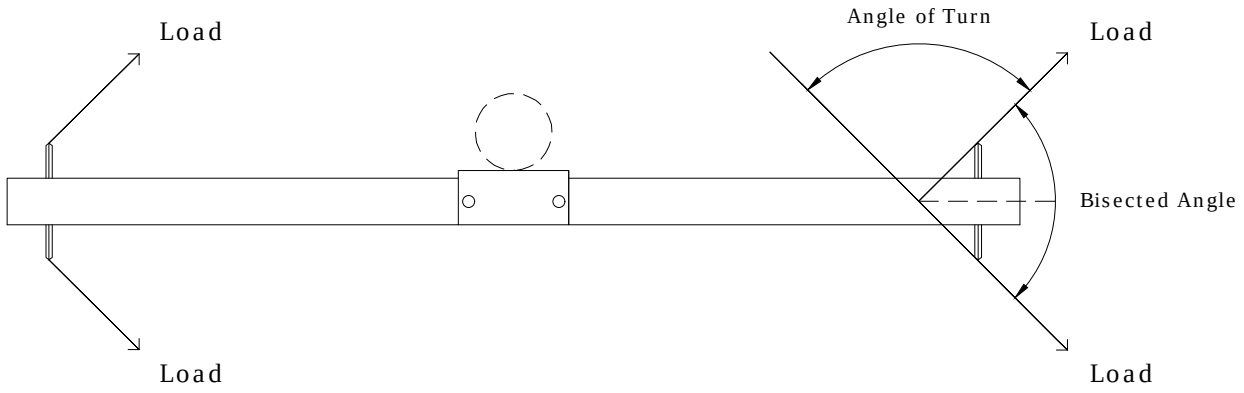

Notes:

1. Maximum angle with 795 is 30º, limited by the 3/4" machine bolt.
2. Angle must be bisected so that each eye-nut has half the angle.
3. Phase separation may limit the angle. Use shackle clevises (S/N 1625) for angles.

Rev. 4 - Added avian note, changed from porcelain to polymer insulators, and updated material list.

Clark Public Utilities

CONSTRUCTION STANDARDS

8' PRE-ASSEMBLED DOUBLE DEADEND
795 AAC MAX WIRE

REVISIONS

R	DATE	ENGR	OPS
1	2/11/81	GGW	
2	3/02	REDRAWN	IN CAD
3	12/11/07	LB	AH
4	1/4/18	CM	DK

PAGE: 2 of 4

D51A

CAD FILE: D51A

APP: ELM

DATE: 1/31/80

SECTION 340

CR28A

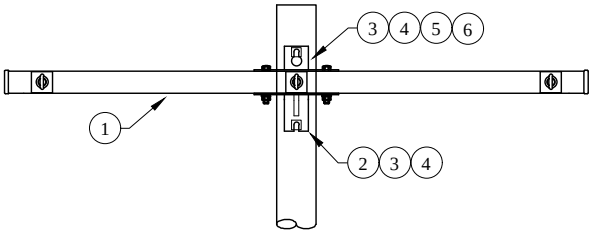

PR4

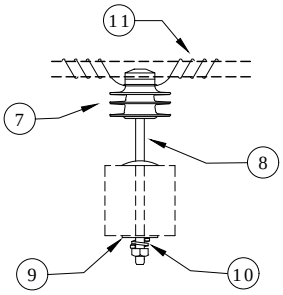

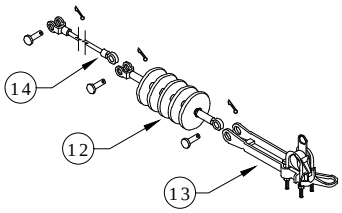

Middle Phase

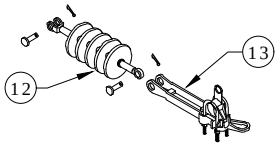

Outside Phases

S10

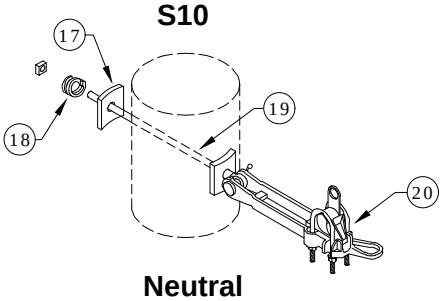

Neutral

S11

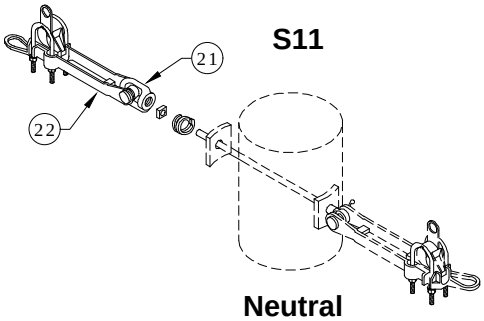

Neutral

Rev. 4 - Added avian note, changed from porcelain to polymer insulators, and updated material list.

Clark Public Utilities

CONSTRUCTION STANDARDS

8' PRE-ASSEMBLED DOUBLE DEADEND
795 AAC MAX WIRE

REVISIONS

R	DATE	ENGR	OPS
1	2/11/81	GGW	
2	3/02	REDRAWN	IN CAD
3	12/11/07	LB	AH
4	1/4/18	CM	DK

PAGE:		CAD FILE:	APP: ELM	SECTION
3 of 4	D51A	D51A	DATE: 1/31/80	340

Rev. 4 - Added avian note, changed from porcelain to polymer insulators, and updated material list.

ITEM NO.	DESCRIPTION	D51A CR28A QTY.	S/N
1	Arm, Deadend Assembly, 3-position, 336 & 795	1	2509
2	Bolt, Machine, 3/4" x 14", Galv., 18,350 lbs Ultimate Tensile ✡	1	174
3	Washer, Lock, Spring, Double Coil, Galv., 3/4" ✡	2	2218
4	Washer, Curved, Square, Cast, 3" x 3" x 3/8" Thick x 13/16" Hole	2	1392
5	Nut, Eye Oval 3/4", Galv.	1	914
6	Bolt, Machine, 3/4" x 16", Galv., 18,350 lbs Ultimate Tensile ✡	1	175
ITEM NO.	DESCRIPTION	PR4 (3) QTY.	S/N
7	Insulator, Pin, C Neck, Polymer ✡	3	1968
8	Pin, Crossarm	3	961
9	Washer, Square, Flat, 5/8", 2 1/4" x 2 1/4"	3	1412
10	Washer, Lock, Spring, Double Coil, Galv., 5/8" ✡	3	2217
11	Wire, Tie, AL Annealed #4 SD	30	1421
ITEM NO.	DESCRIPTION	Additional Material QTY.	S/N
12	Insulator, Suspension, 15 kV Clevis-Tongue, Polymer ✡	6	1967
13	Clamp, Strain, Distribution, 795	6	303
14	Insulator, Guy Strain, Fiberglass, 20"✡	2	2909 ✡
15	Connector, Tap, Wedge, 795 to 795 ✡	6	2477
16	Connector, Tap, Wedge, 397 to 397 ✡	2	2501
ITEM NO.	DESCRIPTION	S10 QTY.	S/N
17	Washer, Curved, Square, Cast, 3" x 3" x 3/8" Thick x 13/16" Hole	2	1392
18	Washer, Lock, Spring, Double Coil, Galv., 5/8" ✡	1	2217
19	Bolt, Eye, 5/8" x 14", Galv., 12,400 lbs Ultimate Tensile ✡	1	108
20	Clamp, Strain, Distribution, #2 - 397.5	1	302
	DESCRIPTION	S11 QTY.	S/N
21	Nut, Eye Oval 5/8", Galv.	1	913
22	Clamp, Strain, Distribution, #2 - 397.5	1	302

Clark Public Utilities

CONSTRUCTION STANDARDS

8' PRE-ASSEMBLED DOUBLE DEADEND
795 AAC MAX WIRE

REVISIONS

R	DATE	ENGR	OPS
1	2/11/81	GGW	
2	3/02	REDRAWN	IN CAD
3	12/11/07	LB	AH
4	1/4/18	CM	DK

PAGE: 4 of 4

D51A

CAD FILE: D51A

APP: ELM

DATE: 1/31/80

SECTION 340

FRONT VIEW

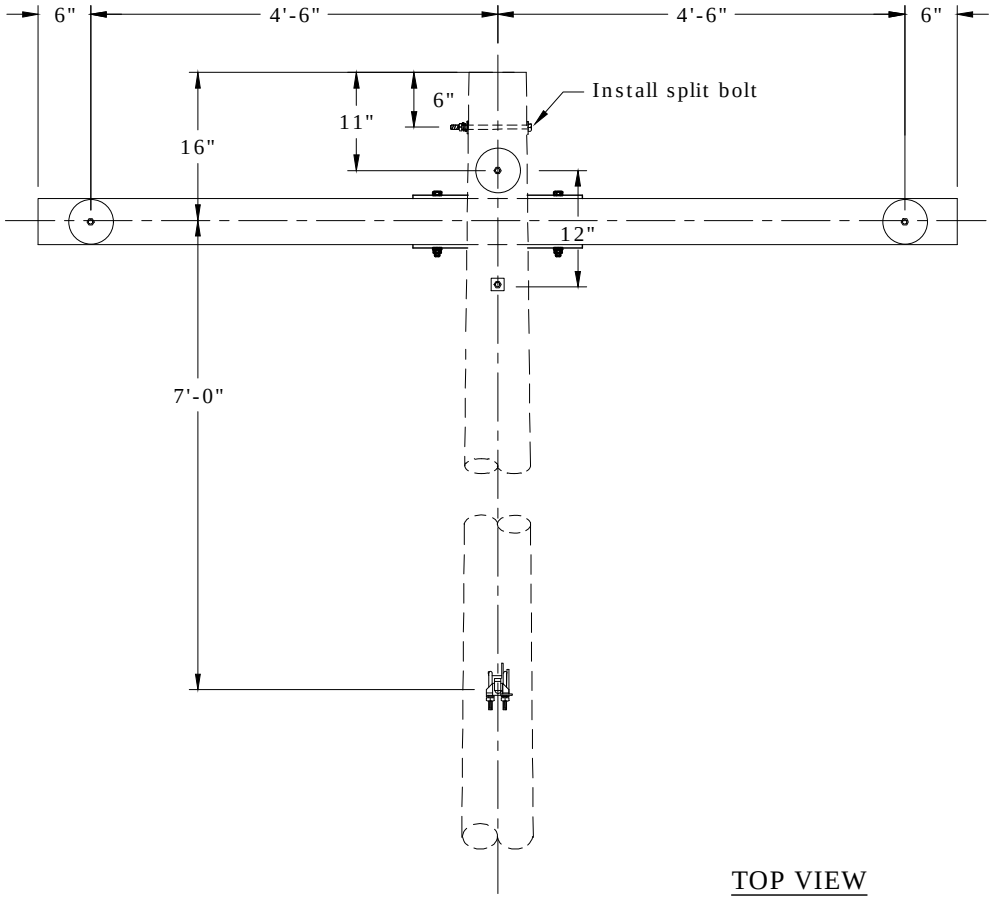

TOP VIEW

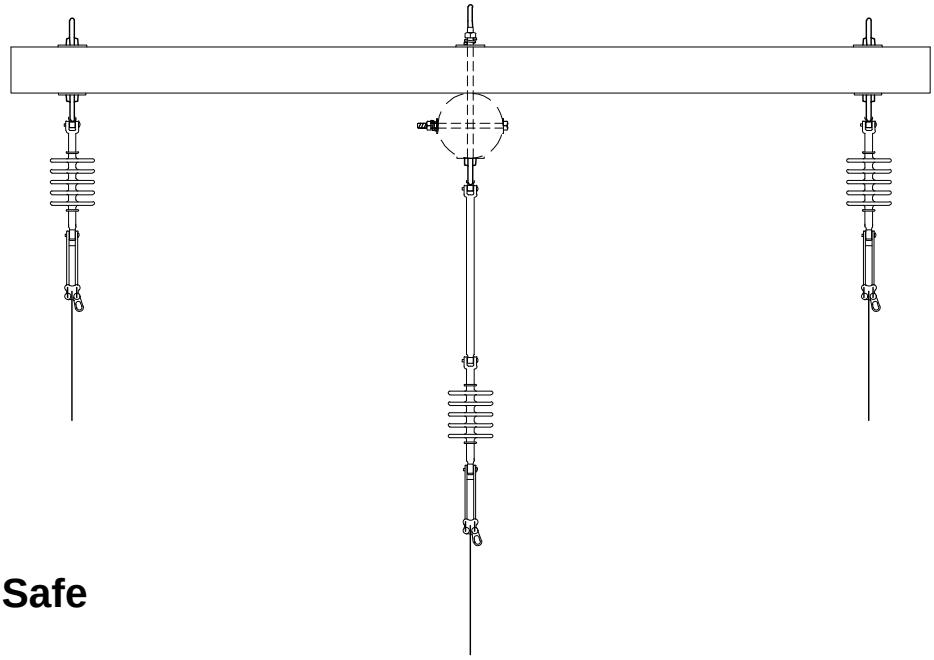

Avian Safe

Rev. 4 - Added avian note and updated material list.

Clark Public Utilities

CONSTRUCTION STANDARDS

10' PRE-ASSEMBLED DEADEND
795 AAC MAX WIRE

REVISIONS

R	DATE	ENGR	OPS
1	2/11/81	GGW	
2	3/02	REDRAWN	IN CAD
3	12/11/07	LB	AH
4	1/4/18	CM	DK

PAGE:		CAD FILE:	APP: ELM	SECTION
1 of 2	D52B	D52B	DATE: 1/31/80	340

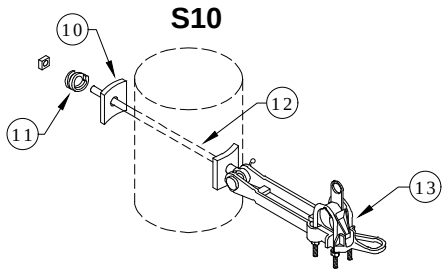

Neutral

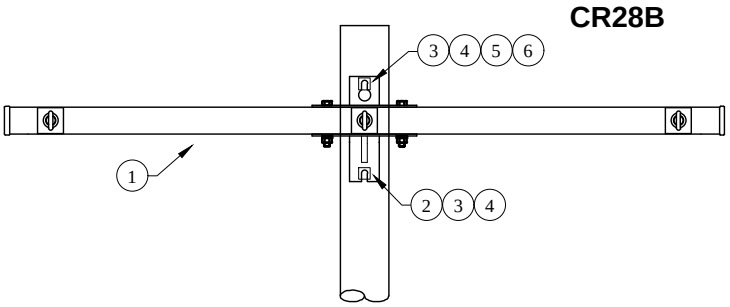

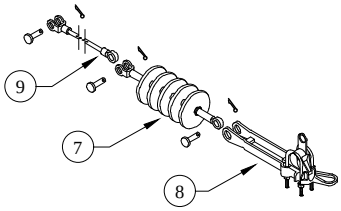

Center Phase

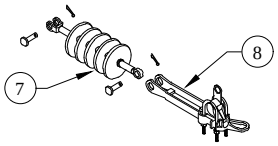

Road & Field Phases

Rev. 4 - Added avian note and updated material list.

ITEM NO.	DESCRIPTION	D52B CR28B QTY.	S/N
1	Arm, Deadend Assembly, 3-position, 336 & 795	1	2681
2	Bolt, Machine, 3/4" x 14", Galv., 18,350 lbs Ultimate Tensile ✡	1	174
3	Washer, Lock, Spring, Double Coil, Galv., 3/4" ✡	2	2218
4	Washer, Curved, Square, Cast, 3" x 3" x 3/8" Thick x 13/16" Hole	2	1392
5	Nut, Eye Oval 3/4", Galv.	1	914
6	Bolt, Machine, 3/4" x 16", Galv., 18,350 lbs Ultimate Tensile ✡	1	175
ITEM NO.	DESCRIPTION	Additional Material QTY.	S/N
7	Insulator, Suspension, 15 kV Clevis-Tongue, Polymer ✡	3	1967
8	Clamp, Strain, Distribution, 795	3	303
9	Insulator, Guy Strain, Fiberglass, 20" ✡	1	2909 ✡
ITEM NO.	DESCRIPTION	S10 QTY.	S/N
10	Washer, Curved, Square, Cast, 3" x 3" x 3/8" Thick x 13/16" Hole	2	1392
11	Washer, Lock, Spring, Double Coil, Galv., 5/8" ✡	1	2217
12	Bolt, Eye, 5/8" x 14", Galv., 12,400 lbs Ultimate Tensile ✡	1	108
13	Clamp, Strain, Distribution, #2 - 397.5	1	302

Clark Public Utilities

CONSTRUCTION STANDARDS

10' PRE-ASSEMBLED DEADEND
795 AAC MAX WIRE

REVISIONS

R	DATE	ENGR	OPS
1	2/11/81	GGW	
2	3/02	REDRAWN	IN CAD
3	12/11/07	LB	AH
4	1/4/18	CM	DK

PAGE: 2 of 2

D52B

CAD FILE: D52B

APP: ELM

DATE: 1/31/80

SECTION 340

FRONT VIEW

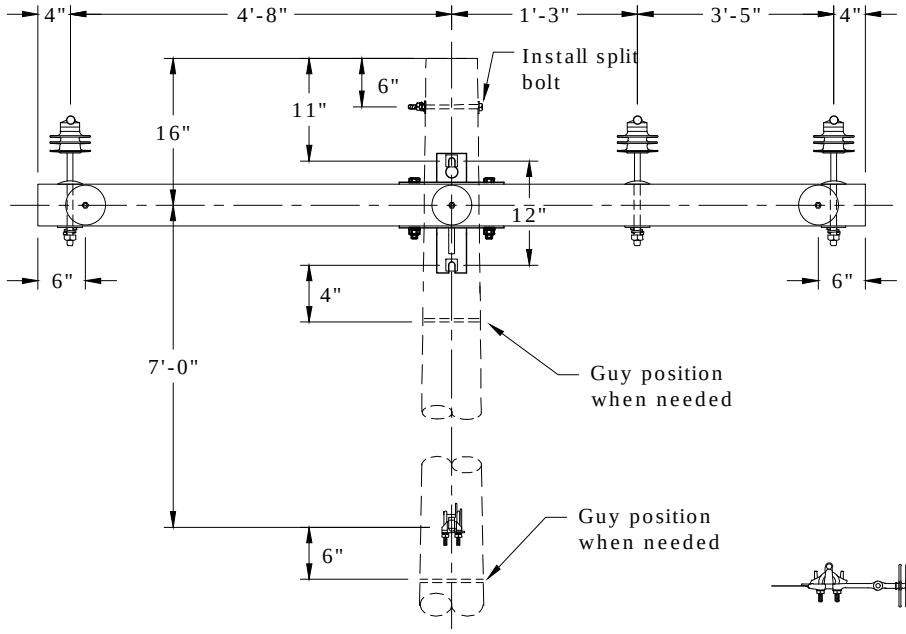

SIDE VIEW

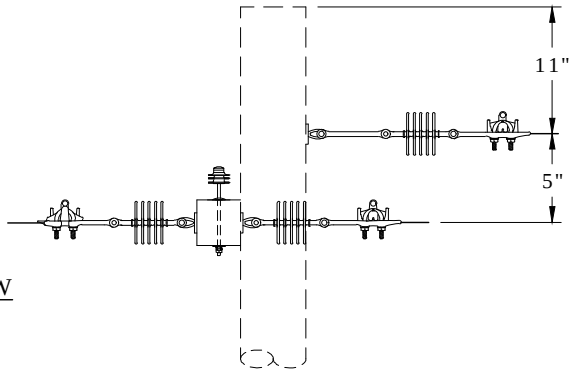

TOP VIEW

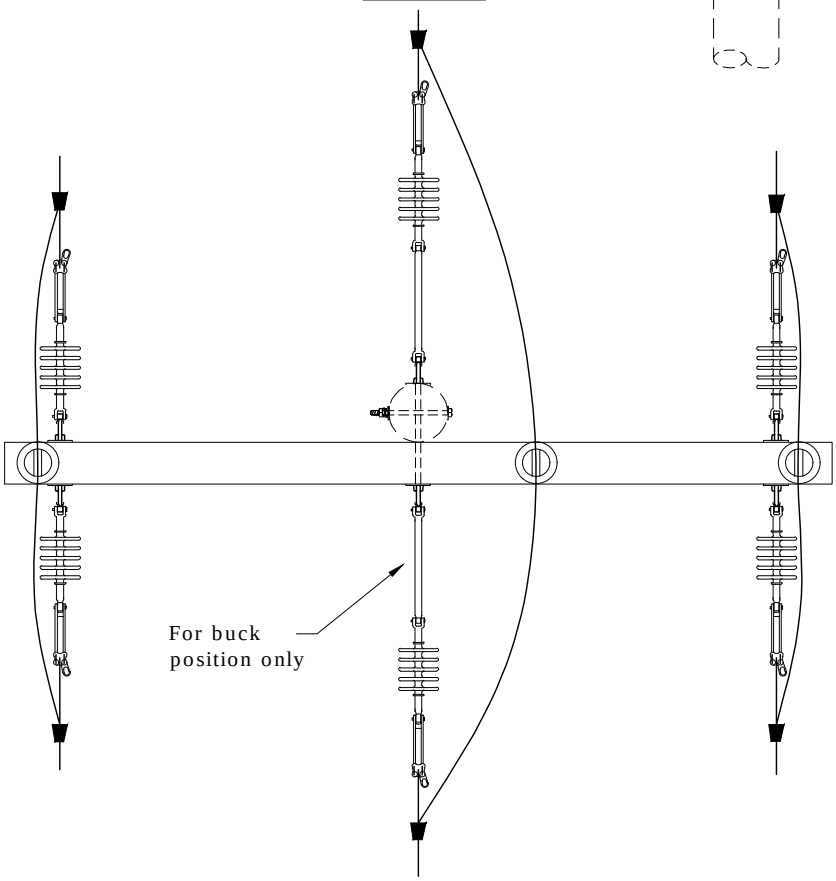

Note: See Std AC - Avian Covers - Section 400 if needed. Covers and tree wire jumper only required on center phase.

Rev. 4 - Added avian note and updated material list.

Clark Public Utilities

CONSTRUCTION STANDARDS

10' PRE-ASSEMBLED DOUBLE DEADEND
795 AAC MAX WIRE

REVISIONS

R	DATE	ENGR	OPS
1	2/11/81	GGW	
2	3/02	REDRAWN	IN CAD
3	12/11/07	LB	AH
4	1/4/18	CM	DK

PAGE: 1 of 4

D53B

CAD FILE: D53B

APP: ELM

DATE: 1/31/80

SECTION 340

DEADEND FOR ANGLED SPANS

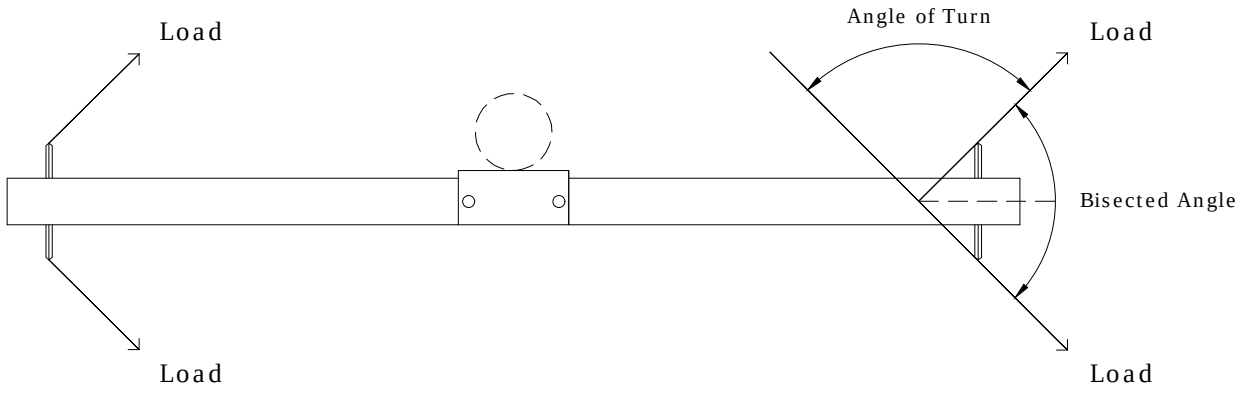

Notes:

1. Maximum angle with 795 is 30º, limited by the 3/4" machine bolt.
2. Angle must be bisected so that each eye-nut has half the angle.
3. Phase separation may limit the angle. Use shackle clevises (S/N 1625) for angles.

Rev. 4 - Added avian note and updated material list.

Clark Public Utilities

CONSTRUCTION STANDARDS

10' PRE-ASSEMBLED DOUBLE DEADEND
795 AAC MAX WIRE

REVISIONS

R	DATE	ENGR	OPS
1	2/11/81	GGW	
2	3/02	REDRAWN	IN CAD
3	12/11/07	LB	AH
4	1/4/18	CM	DK

PAGE: 2 of 4

D53B

CAD FILE: D53B

APP: ELM

DATE: 1/31/80

SECTION 340

CR28B

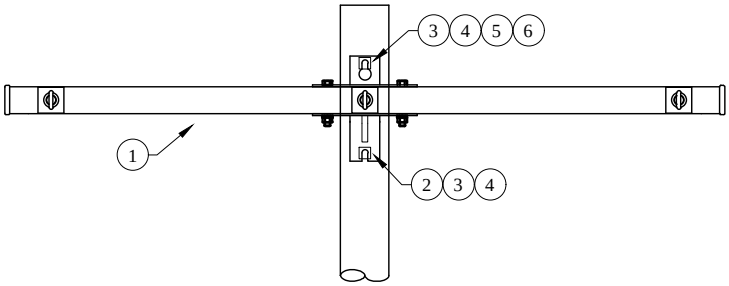

Front View

PR4

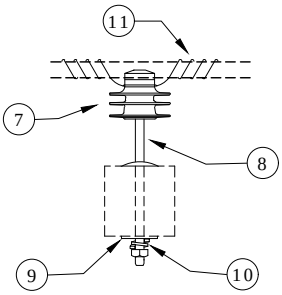

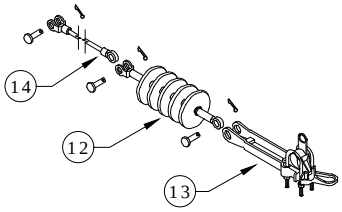

Center Phase

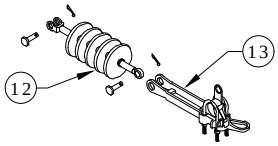

Road & Field Phases

S10

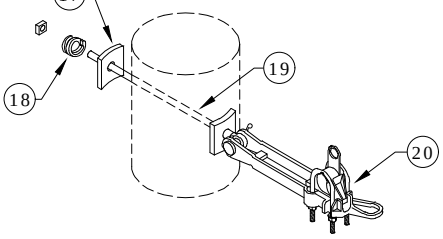

Neutral

S11

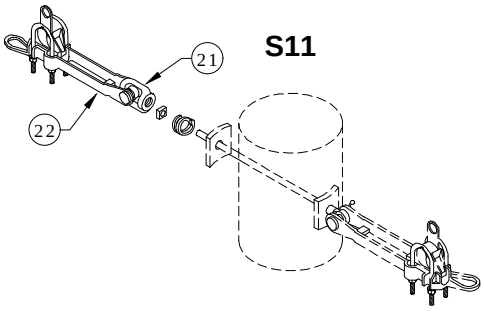

Neutral

Rev. 4 - Added avian note and updated material list.

Clark Public Utilities

CONSTRUCTION STANDARDS

10' PRE-ASSEMBLED DOUBLE DEADEND
795 AAC MAX WIRE

REVISIONS

R	DATE	ENGR	OPS
1	2/11/81	GGW	
2	3/02	REDRAWN	IN CAD
3	12/11/07	LB	AH
4	1/4/18	CM	DK

PAGE:		CAD FILE:	APP: ELM	SECTION
3 of 4	D53B	D53B	DATE: 1/31/80	340

Rev. 4 - Added avian note and updated material list.

ITEM NO.	DESCRIPTION	D53B CR28B QTY.	S/N
1	Arm, Deadend Assembly, 3-position, 336 & 795	1	2681
2	Bolt, Machine, 3/4" x 14", Galv., 18,350 lbs Ultimate Tensile ✲	1	174
3	Washer, Lock, Spring, Double Coil, Galv., 3/4"	2	2218
4	Washer, Curved, Square, Cast, 3" x 3" x 3/8" Thick x 13/16" Hole	2	1392
5	Nut, Eye Oval 3/4", Galv.	1	914
6	Bolt, Machine, 3/4" x 16", Galv., 18,350 lbs Ultimate Tensile ✲	1	175
ITEM NO.	**DESCRIPTION**	**PR4 (3) QTY.**	**S/N**
7	Insulator, Pin, C Neck, Polymer	1	1968
8	Pin, Crossarm	1	961
9	Washer, Square, Flat, 5/8", 2 1/4" x 2 1/4"	1	1412
10	Washer, Lock, Spring, Double Coil, Galv., 5/8"	1	2217
11	Wire, Tie, AL Annealed #4 SD	10	1421
ITEM NO.	**DESCRIPTION**	**Additional Material QTY.**	**S/N**
12	Insulator, Suspension, 15 kV Clevis-Tongue, Polymer Type ✲	6	1967
13	Clamp, Strain, Distribution, 795	6	303
14	Insulator, Guy Strain, Fiberglass, 20" ✲	2	2909 ✲
15	Connector, Tap, Wedge, 795 to 795 ✲	6	2477
16	Connector, Tap, Wedge, 397 to 397 ✲	2	2501
ITEM NO.	**DESCRIPTION**	**S10 QTY.**	**S/N**
17	Washer, Curved, Square, Cast, 3" x 3" x 3/8" Thick x 13/16" Hole	2	1392
18	Washer, Lock, Spring, Double Coil, Galv., 5/8" ✲	1	2217
19	Bolt, Eye, 5/8" x 14", Galv., 12,400 lbs Ultimate Tensile ✲	1	108
20	Clamp, Strain, Distribution, #2 - 397.5	1	302
ITEM NO.	**DESCRIPTION**	**S11 QTY.**	**S/N**
21	Nut, Eye Oval 5/8", Galv.	1	913
22	Clamp, Strain, Distribution, #2 - 397.5	1	302

Clark Public Utilities

CONSTRUCTION STANDARDS

10' PRE-ASSEMBLED DOUBLE DEADEND
795 AAC MAX WIRE

REVISIONS

R	DATE	ENGR	OPS
1	2/11/81	GGW	
2	3/02	REDRAWN	IN CAD
3	12/11/07	LB	AH
4	1/4/18	CM	DK

PAGE: 4 of 4

D53B

CAD FILE: D53B

APP: ELM

DATE: 1/31/80

SECTION 340

350
OVERHEAD FIBER OPTIC

12/23/2022

~	FO1	Tangent – 0° to 20°
~	FO2	Angle – 20° to 30°
~	FO3	Tangent – Fiberglass Arm
~	FO21	Storage Loop
~	FO42	Double Deadend Tangent
C	FO43	Double Deadend Angled
~	FOR	Riser

N New Standard
R Redrawn Standard
C Changed Standard
~ No Change

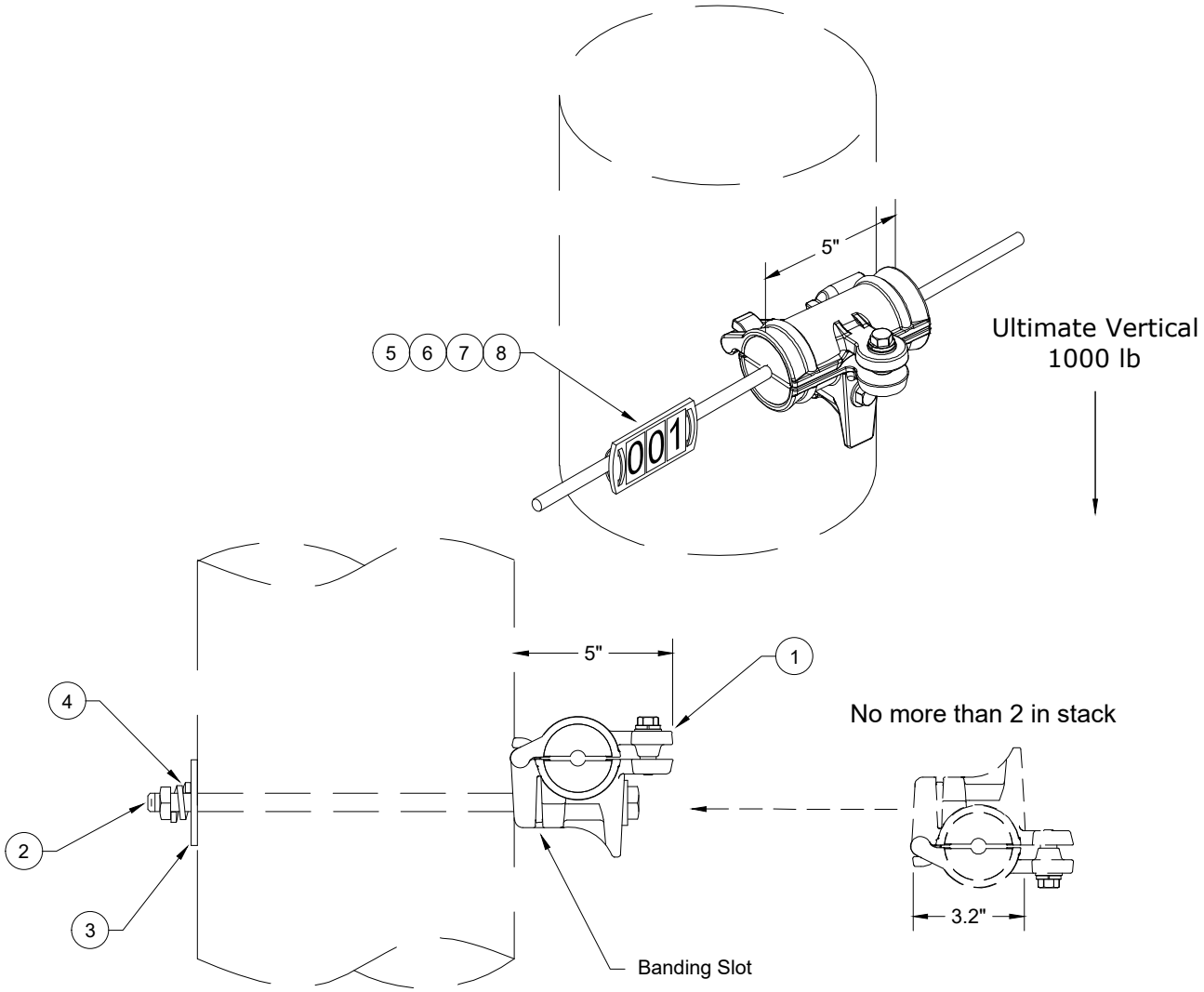

CPU fiber is top attachment in communication space

5/8" Machine Bolt	
Length	S/N
16"	157
18"	158
20"	159
22"	160
24"	161

Notes:

1. Follow Joint Use Std JU2 - Pole Attachment Guidelines - Section 1910.
2. Maximum span length is 450 feet.
3. Call for additional support and 4" longer bolt when stacking.
4. Banding slot is available for steel poles.
5. Use Std FO1 for 48-count and Std FO1A for 96-count fiber.

ITEM NO.	DESCRIPTION	48-Count FO1 QTY.	48-Count FO1 S/N	96-Count FO1A QTY.	96-Count FO1A S/N
1	Support, Al, Thru-bolt, for ADSS fiber, 20° Max	1	3000	1	3001
2	Bolt, Machine, 5/8" x 14", Galv, 12,400 lb Ultimate Tensile	1	156	1	156
3	Washer, Curved, Square, Cast, Galv, 3" x 3" x 3/8" Thick x 13/16" Hole	1	1392	1	1392
4	Washer, Lock, Spring, Double Coil, Galv, 5/8"	1	2217	1	2217
5	Tag, "O" (& Zero), Character, 1"	2	2636	2	2636
6	Tag, "1", Character, 1"	1	2648	1	2648
7	Holder, Identification Tag, 4 Position	1	2588	1	2588
8	Wrap, Tie, Fluoropolymer, 7"	2	3022	2	3022

Clark Public Utilities

CONSTRUCTION STANDARDS

FIBER OPTIC STACKABLE TANGENT SUPPORT
0° to 20°
ADSS FIBER

REVISIONS	DATE	ENGR	OPS

PAGE: 1 of 1

FO1,FO1A

CAD FILE: FO1

APP: KJP/DRK
DATE: 8/11/21

SECTION 350

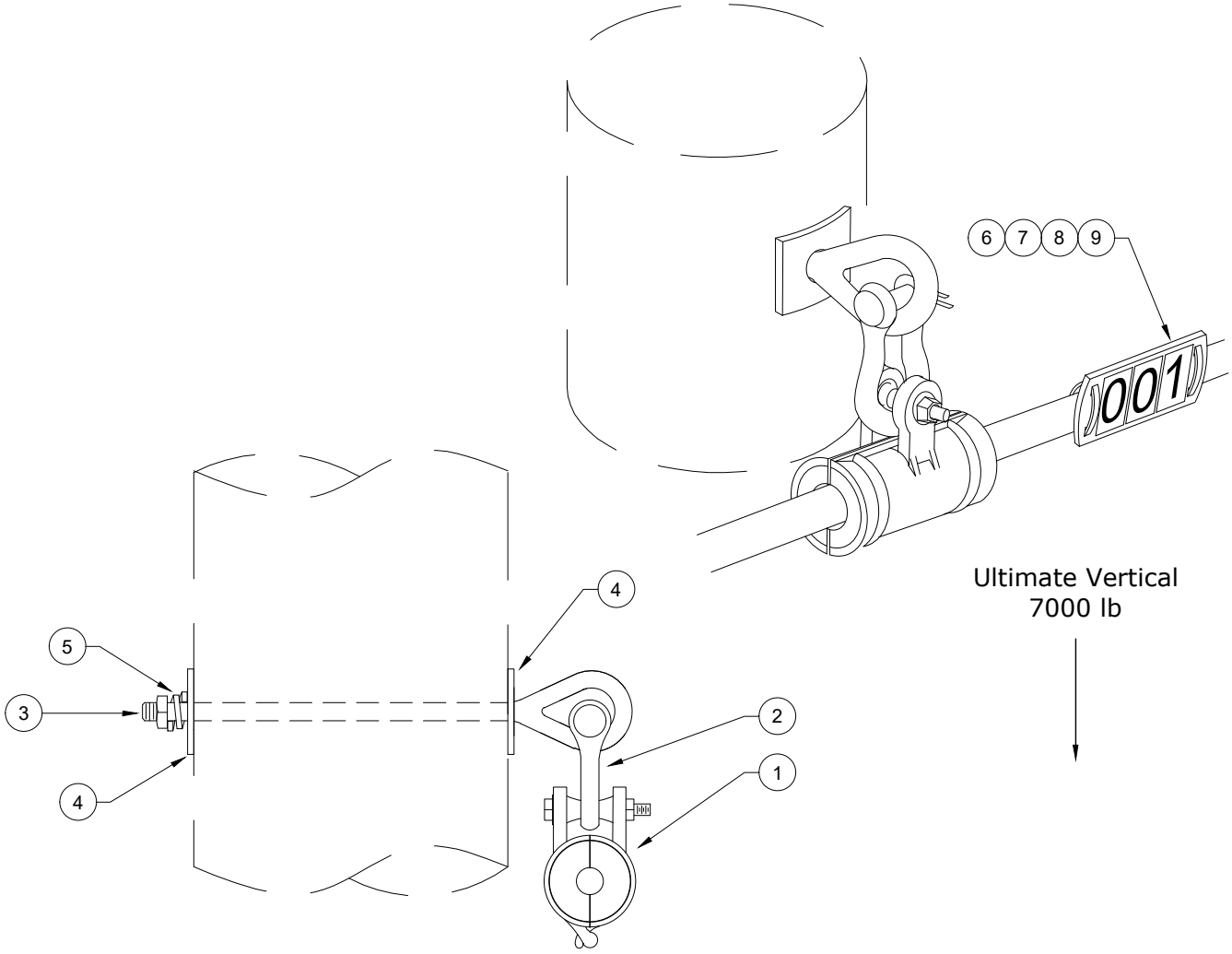

CPU fiber is top attachment in communication space

Notes:

1. Follow Joint Use Std JU2 - Pole Attachment Guidelines - Section 1910.
2. Maximum span length is 450 feet.
3. Banding attachment is available for steel poles.
4. Use Std FO2 for 48-count and Std FO2A for 96-count fiber.

ITEM NO.	DESCRIPTION	48-Count FO2 QTY.	48-Count FO2 S/N	96-Count FO2A QTY.	96-Count FO2A S/N
1	Support, Al, Suspension, for ADSS fiber, 30° Max	1	3002	1	3003
2	Shackle, Anchor, Galv, 25,000 lb	1	3007	1	3007
3	Bolt, Eye, 5/8" x 14", Galv, 12,400 lb Ultimate Tensile	1	108	1	108
4	Washer, Curved, Square, Cast, Galv, 3" x 3" x 3/8" Thick w/ 13/16" Hole	2	1392	2	1392
5	Washer, Lock, Spring, Double Coil, Galv, 5/8"	1	2217	1	2217
6	Tag, "O" (& Zero), Character, 1"	2	2636	2	2636
7	Tag, "1", Character, 1"	1	2648	1	2648
8	Holder, Identification Tag, 4 Position	1	2588	1	2588
9	Wrap, Tie, Fluoropolymer, 7"	2	3022	2	3022

Clark Public Utilities

CONSTRUCTION STANDARDS

FIBER OPTIC SUSPENSION SUPPORT
0° to 30°
ADSS FIBER

REVISIONS

	DATE	ENGR	OPS

PAGE: 1 of 1

FO2,FO2A

CAD FILE: FO2

APP: KJP/DRK
DATE: 8/11/21

SECTION 350

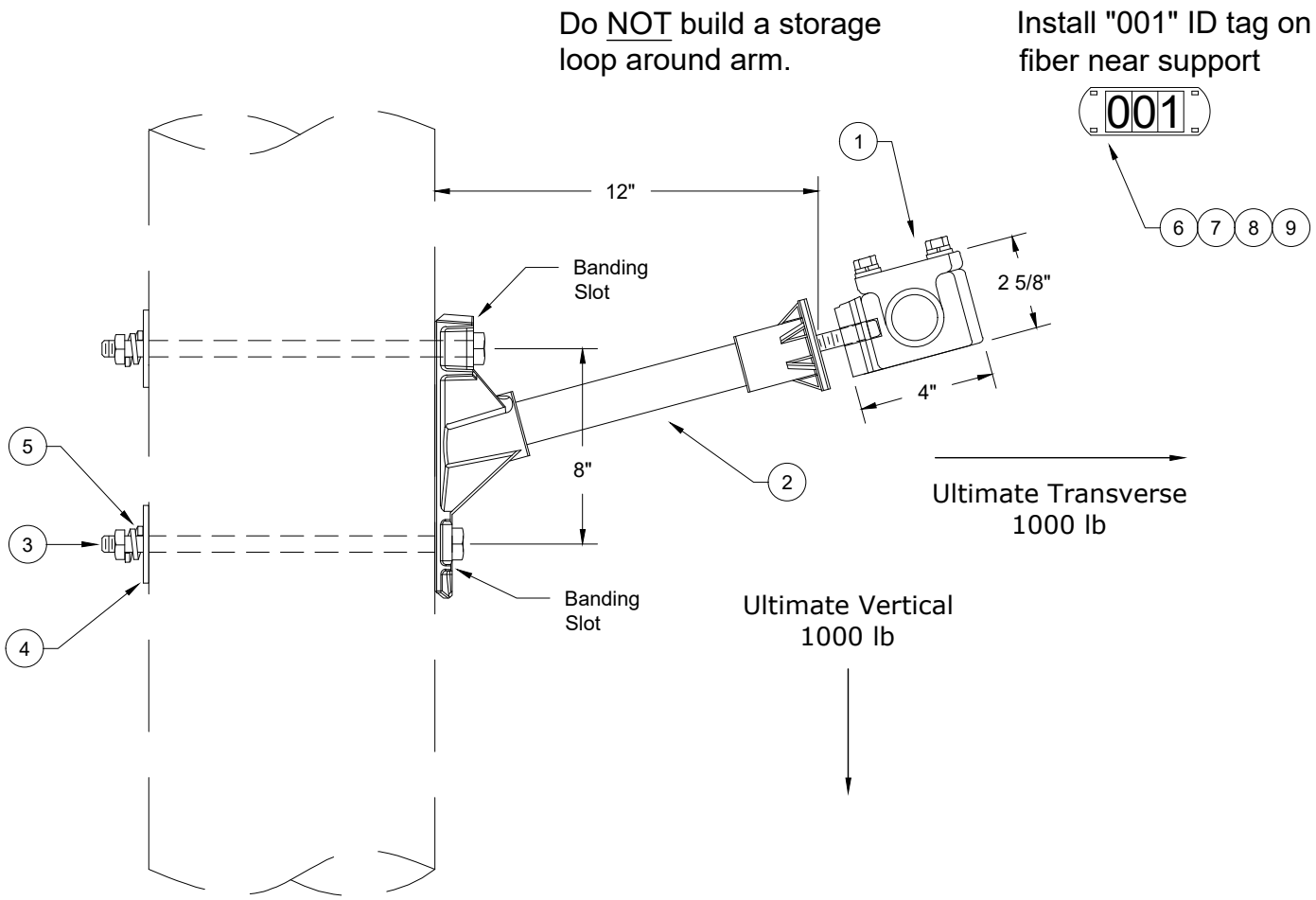

CPU fiber is top attachment in communication space

Notes:

1. Follow Joint Use Std JU2 - Pole Attachment Guidelines - Section 1910.
2. Maximum span length is 450 feet.
3. Banding slot is available for steel poles.
4. Use Std FO3 for 48-count and Std FO3A for 96-count fiber.
5. Ultimate Longitudinal Load = 1000 lb

ITEM NO.	DESCRIPTION	48-Count FO3 QTY.	48-Count FO3 S/N	96-Count FO3A QTY.	96-Count FO3A S/N
1	Support, Dielectric, Arm, for ADSS fiber, 20° Max	1	3004	1	3005
2	Arm, Standoff, Fiberglass, 1.5" diameter, 12" long, 5/8" thread	1	3008	1	3008
3	Bolt, Machine, 5/8" x 14", Galv, 12,400 lb Ultimate Tensile	2	156	2	156
4	Washer, Curved, Square, Cast, Galv, 3" x 3" x 3/8" Thick w/ 13/16" Hole	2	1392	2	1392
5	Washer, Lock, Spring, Double Coil, Galv, 5/8"	2	2217	2	2217
6	Tag, "O" (& Zero), Character, 1"	2	2636	2	2636
7	Tag, "1", Character, 1"	1	2648	1	2648
8	Holder, Identification Tag, 4 Position	1	2588	1	2588
9	Wrap, Tie, Fluoropolymer, 7"	2	3022	2	3022

Clark Public Utilities

CONSTRUCTION STANDARDS

FIBER OPTIC STANDOFF ARM
0° to 20°
ADSS FIBER

REVISIONS	DATE	ENGR	OPS

PAGE: 1 of 1

FO3,FO3A

CAD FILE: FO3

APP: KJP/DRK
DATE: 8/11/21

SECTION 350

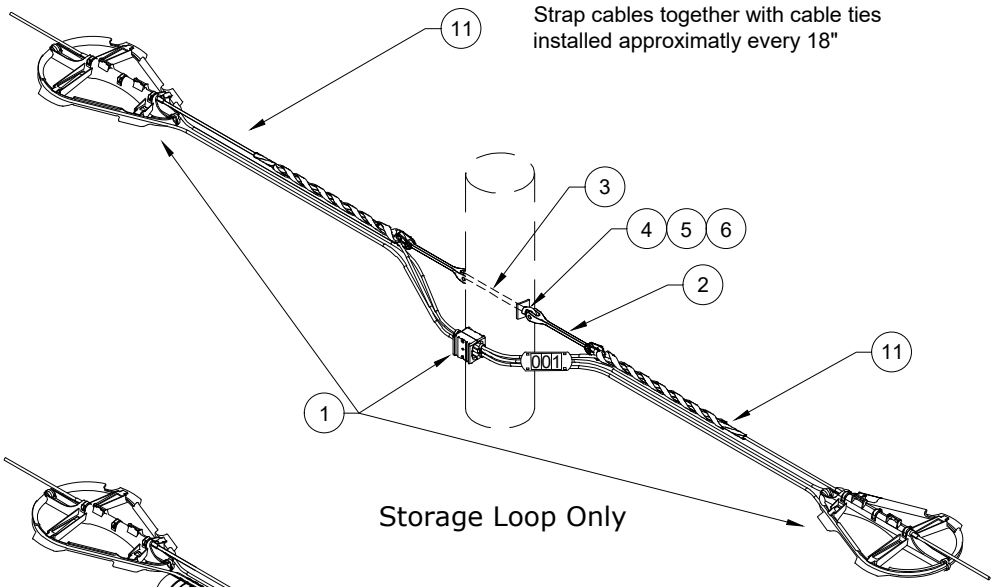

Storage Loop Only

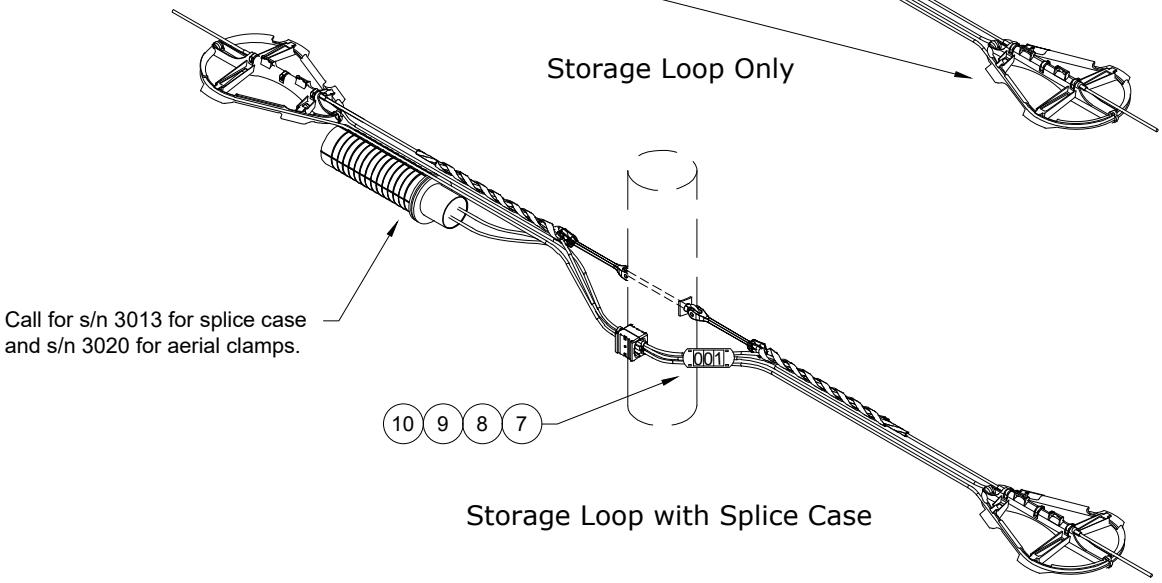

Storage Loop with Splice Case

CPU fiber is top attachment in communication space

Notes:

1. Follow Joint Use Std JU2 - Pole Attachment Guidelines - Section 1910.
2. Storage should be easily accessible by bucket truck.
3. Length of fiber in storage to be at least 150 feet.
4. Call separately for splice case (s/n 3013) and aerial clamps (s/n 3020).
5. Use Std FO21 for 48-count and Std FO21A for 96-count fiber.

ITEM NO.	DESCRIPTION	48-Count FO21 QTY.	48-Count FO21 S/N	96-Count FO21A QTY.	96-Count FO21A S/N
1	Storage Kit, Fiber, OH, includes 2 loop brackets, 1 cable guide	1	3011	1	3011
2	Deadend Assembly, for ADSS fiber	2	3009	2	3010
3	Bolt, Double Arm, 5/8" x 14", Galv, 12,000 lb Ultimate Tensile	1	2382	1	2382
4	Nut, Eye, Oval, 5/8", Galv	2	913	2	913
5	Washer, Curved, Square, Cast, Galv, 3" x 3" x 3/8" Thick w/ 13/16" Hole	2	1392	2	1392
6	Washer, Lock, Spring, Double Coil, Galv, 5/8"	2	2217	2	2217
7	Tag, "O" (& Zero), Character, 1"	2	2636	2	2636
8	Tag, "1", Character, 1"	1	2648	1	2648
9	Holder, Identification Tag, 4 Position	1	2588	1	2588
10	Wrap, Tie, Fluoropolymer, 7"	2	3022	2	3022
11	Wrap, Tie, Acetal, 13.5"	25	3023	25	3023

Clark Public Utilities

CONSTRUCTION STANDARDS

FIBER OPTIC
STORAGE LOOP
ADSS FIBER

REVISIONS	DATE	ENGR	OPS

PAGE: 1 of 1

FO21,FO21A

CAD FILE: FO21

APP: KJP/DRK
DATE: 8/11/21

SECTION 350

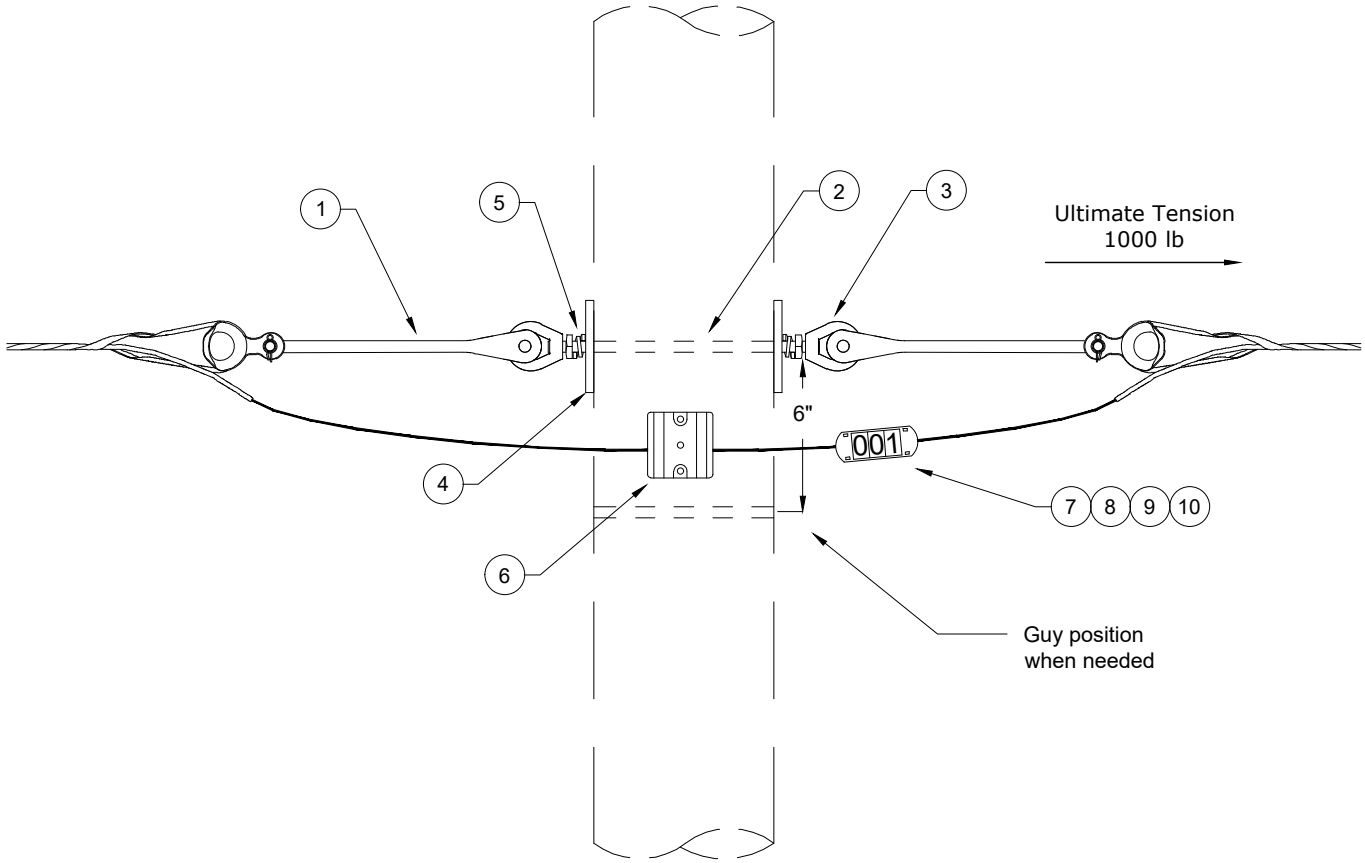

CPU fiber is top attachment in communication space

Notes:

1. Follow joint use Std JU2 - Pole Attachment Guidelines - Section 1910.
2. Maximum span length is 450 ft.
3. Use Std FO42 for 48-count and Std FO42A for 96-count fiber.
4. Call for guying separately if needed.

ITEM NO.	DESCRIPTION	48 Count FO42 QTY.	48 Count FO42 S/N	96 Count FO42A QTY.	96 Count FO42A S/N
1	Deadend Assembly, for ADSS fiber	2	3009	2	3010
2	Bolt, Double Arm, 5/8" x 14", Galv, 12,000 lb Ultimate Tensile	1	2382	1	2382
3	Nut, Eye, Oval, 5/8", Galv	2	913	2	913
4	Washer, Curved, Square, Cast, Galv, 3" x 3" x 3/8" Thick w/ 13/16" Hole	2	1392	2	1392
5	Washer, Lock, Spring, Double Coil, Galv, 5/8"	2	2217	2	2217
6	Guide, Pole, for ADSS fiber	1	3021	1	3021
7	Tag, "O" (& Zero), Character, 1"	2	2636	2	2636
8	Tag, "1", Character, 1"	1	2648	1	2648
9	Holder, Identification Tag, 4 Position	1	2588	1	2588
10	Wrap, Tie, Fluoropolymer, 7"	2	3022	2	3022

Clark Public Utilities

CONSTRUCTION STANDARDS

FIBER OPTIC
TANGENT DOUBLE DEADEND
ADSS FIBER

REVISIONS

	DATE	ENGR	OPS

PAGE: 1 of 1

FO42,FO42A

CAD FILE: FO42

APP: KJP/DRK
DATE: 8/11/21

SECTION 350

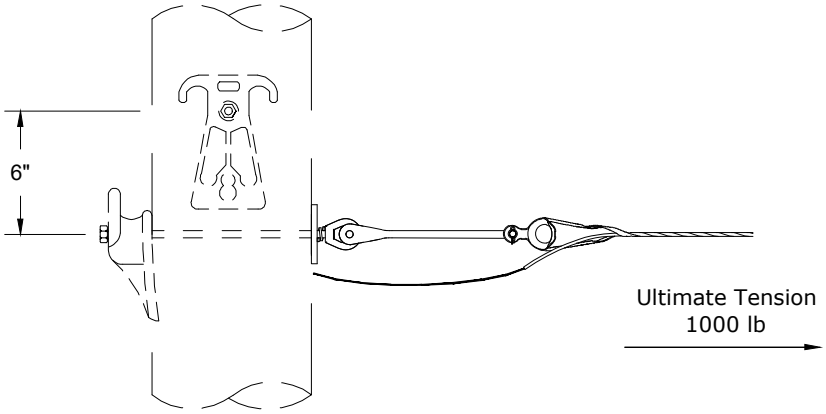

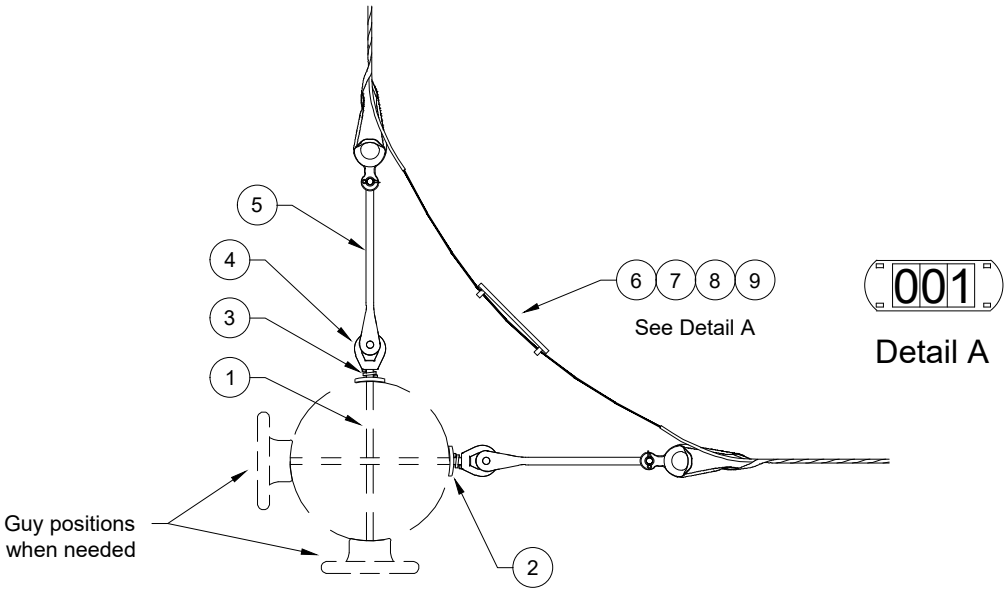

CPU fiber is top attachment in communication space

Notes:
1. Follow Joint Use Std JU2 - Pole Attachment Guidelines - Section 1910.
2. Maximum span length is 450 feet.
3. Use Std FO43 for 48-count and Std FO43A for 96-count fiber.
4. Call for Std G43, downguy, and anchor separately when guying is required.

Rev. 1 - Removed G43 from materials. Added notes to call for guying when needed.

ITEM NO	DESCRIPTION	48-Count FO43 QTY	48-Count FO43 S/N	96-Count FO43A QTY	96-Count FO43A S/N
1	Bolt, Machine 3/4" x 14", 18,350 lb Ultimate Tensile	2	174	2	174
2	Washer, Curved, Cast, 4" x 4" w/ 13/16" Hole	4	1910	4	1910
3	Washer, Lock, Spring, Double Coil, Galv, 3/4"	4	2218	4	2218
4	Nut, Eye, Oval, 3/4", Galv	2	914	2	914
5	Deadend Assembly, for ADSS fiber	2	3009	2	3010
6	Tag, "O" (& Zero), Character, 1"	2	2636	2	2636
7	Tag, "1", Character, 1"	1	2648	1	2648
8	Holder, Identification Tag, 4 Position	1	2588	1	2588
9	Wrap, Tie, Fluoropolymer, 7"	2	3022	2	3022

Clark Public Utilities

CONSTRUCTION STANDARDS

FIBER OPTIC
90° DOUBLE DEADEND
ADSS FIBER

REVISIONS

	DATE	ENGR	OPS
1	10/21/21	DRK	

PAGE: 1 of 1

FO43,FO43A

CAD FILE: FO43

APP: KJP/DRK
DATE: 8/11/21

SECTION 350

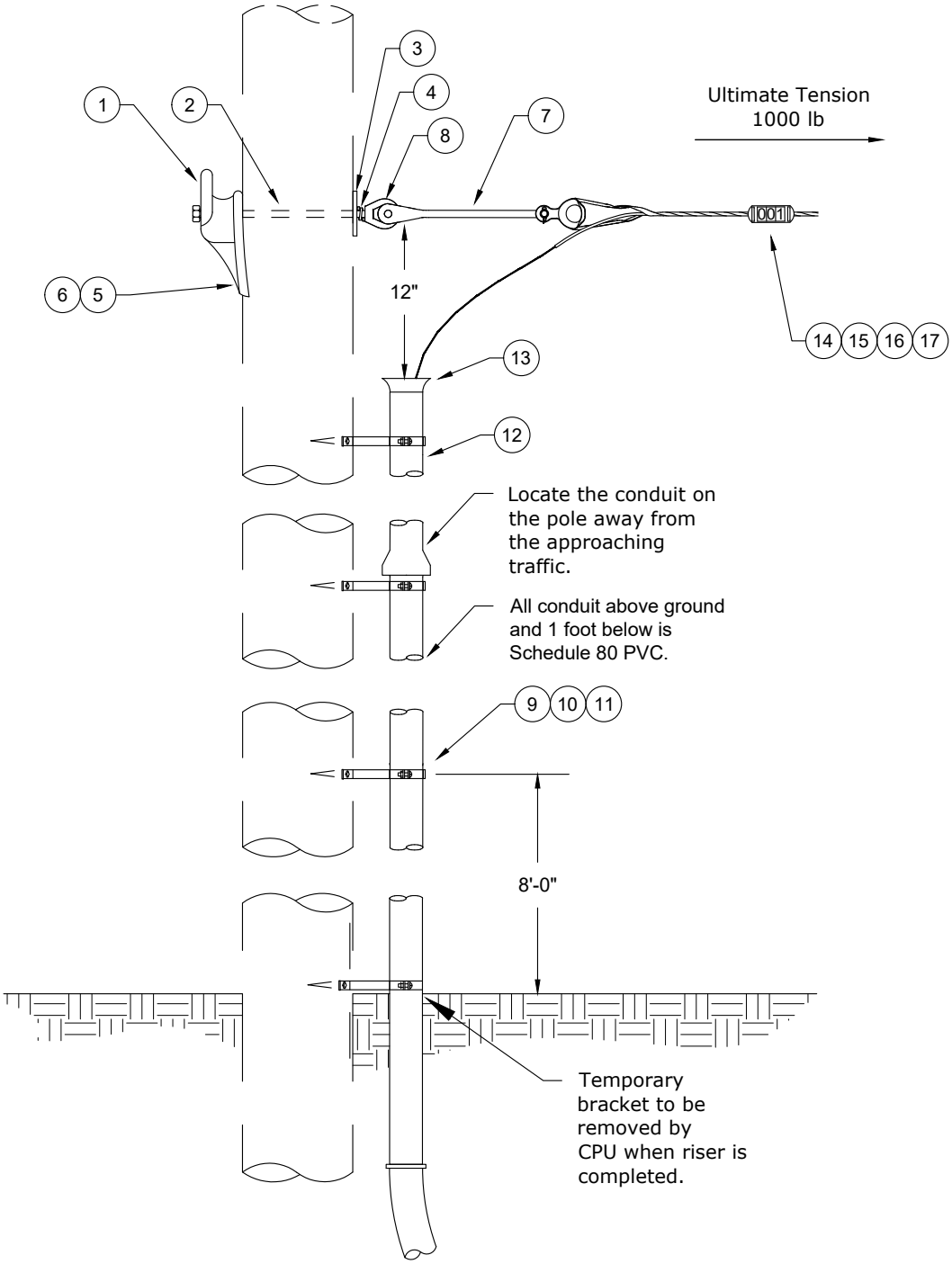

CPU fiber is top attachment in communication space

Notes:

1. Follow joint use Std JU2 - Pole Attachment Guidelines - Section 1910.
2. Maximum span length is 450 feet.
3. Use Std FOR for 48-count and Std FORA for 96-count fiber.
4. Call for downguy and anchor separately.

Clark Public Utilities

CONSTRUCTION STANDARDS

FIBER OPTIC
RISER
ADSS FIBER

REVISIONS	DATE	ENGR	OPS

PAGE:		CAD FILE:	APP: KJP/DRK	SECTION
1 of 2	FOR,FORA	FOR	DATE: 8/11/21	350

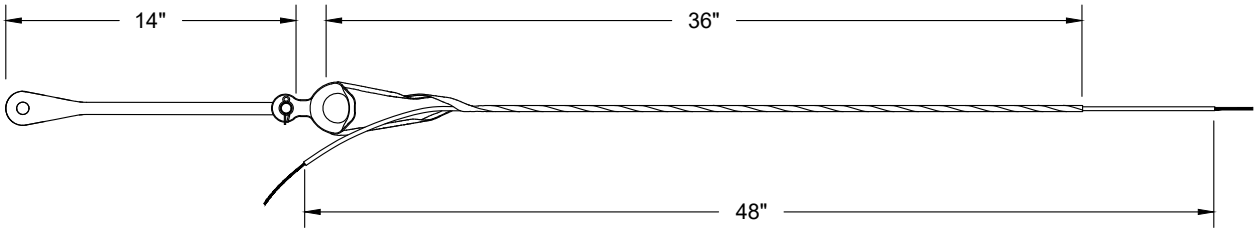

Deadend Assembly Detail (Item #7)

ITEM NO.	DESCRIPTION	48 Count FOR G41 QTY.	48 Count FOR G41 S/N	96 Count FORA G41 QTY.	96 Count FORA G41 S/N
1	Hook, Guy, 25,400 lb Ultimate	1	753	1	753
2	Bolt, Machine 3/4" x 14", 18,350 lb Ultimate Tensile	1	174	1	174
3	Washer, Curved, Cast, 4" x 4" with 13/16" hole	1	1910	1	1910
4	Washer, Lock, Spring, Double Coil, Galv, 3/4"	1	2218	1	2218
5	Screw, Lag, 1/2" x 4 1/2", Twist Drive, Drive Point	1	1132	1	1132
6	Washer, Flat, Round, Galv, 1/2"	1	1394	1	1394
ITEM NO.	DESCRIPTION	Additional Material QTY.	Additional Material S/N	Additional Material QTY.	Additional Material S/N
7	Deadend Assembly, for ADSS fiber	1	3009	1	3010
8	Nut, Eye, Oval, 3/4", Galv	1	914	1	914
9	Screw, Lag, 1/2" x 3", Fetter Drive, Drive Point	6	1131	6	1131
10	Bracket, Standoff, 10 1/2", with Stop	3	226	3	226
11	Clamp, Standoff Bracket, 2" Conduit	3	295	3	295
12	Conduit, PVC, 2" X 10', Sch 80	30	2205	30	2205
13	End Bell, 2", Sch 40	1	2206	1	2206
14	Tag, "O" (& Zero), Character, 1"	2	2636	2	2636
15	Tag, "1", Character, 1"	1	2648	1	2648
16	Holder, Identification Tag, 4 Position	1	2588	1	2588
17	Wrap, Tie, Fluoropolymer, 7"	2	3022	2	3022

Clark Public Utilities

CONSTRUCTION STANDARDS

FIBER OPTIC
RISER
ADSS FIBER

REVISIONS	DATE	ENGR	OPS

PAGE: 2 of 2

FOR,FORA

CAD FILE: FOR

APP: KJP/DRK

DATE: 8/11/21

SECTION 350

400
OVERHEAD CONDUCTOR

1/17/2019

~	AC	Avian Covers
~	BFD	Bird Flight Diverters
~	L4	Splicing Guide, Compression Type Sleeves
~	L5	Splicing Guide, Automatic Type
~	L6, L7	Midspan Tap, Flying Tap
C	LA1, LA2	Lightning (Surge) Arrester
~	SE10	Mobile Home Trailer Connection
~	SS1	1Ø Slack Span - 2/0 ACSR Max Wire
~	SS2	2Ø Slack Span - 2/0 ACSR Max Wire
~	SS3	3Ø Slack Span - 2/0 ACSR Max Wire
~	TI2	Single Insulators Two-Piece Tie, Copper Type Conductors
~	TI3	Hot Line Tying Guide, Copper Type Conductors
~	TI4	Conductor Tying Guide, Single Insulator, ACSR or Aluminum
~	TI5	Conductor Tying Guide, Double Insulator, ACSR or Aluminum

N New Standard
R Redrawn Standard
C Changed Standard
~ No Change

SIDE VIEW

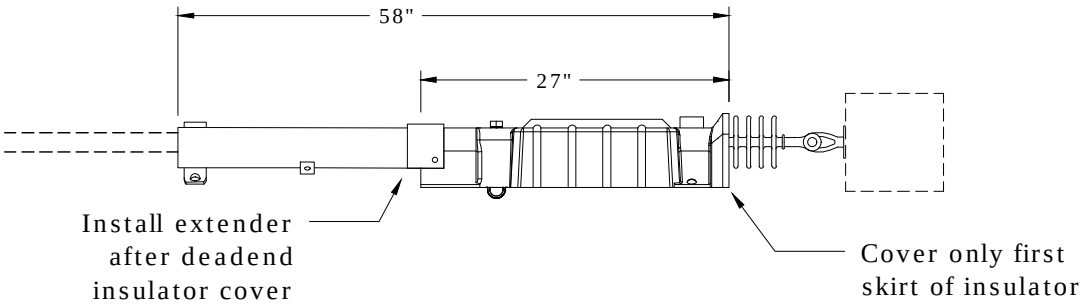

TOP VIEW

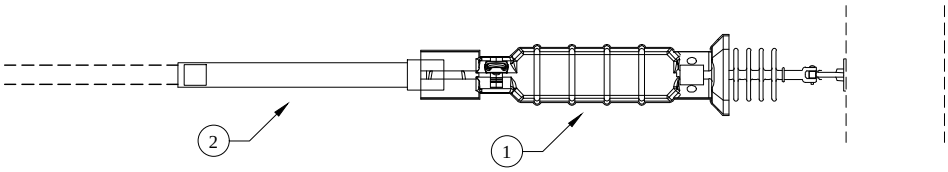

Note: Covers required on center phase only if at least 60" horizontal separation between outside phases. For high neutral, cover middle phase and neutral.

ITEM NO.	DESCRIPTION	ACDE QTY.	ACDE S/N
1	Avian, Cover, Deadend Insulator, #6-795	1	2897
2	Avian, Cover, Extender, #6-795	1	2914

Clark Public Utilities

CONSTRUCTION STANDARDS

AVIAN COVERS
DEADEND

REVISIONS	DATE	ENGR	OPS

PAGE: 1 of 3

AC

CAD FILE: AC

APP: CM/DK

DATE: 10-18-17

SECTION 400

SIDE VIEW

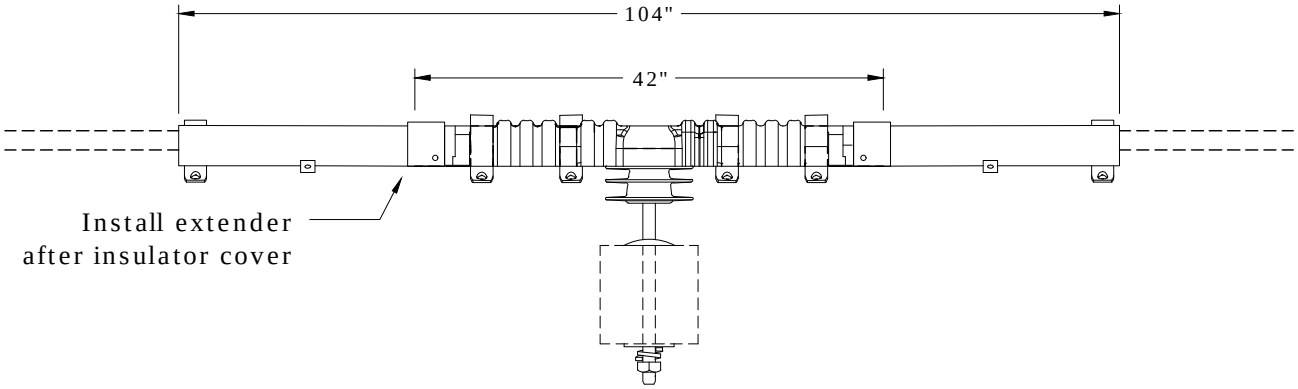

TOP VIEW

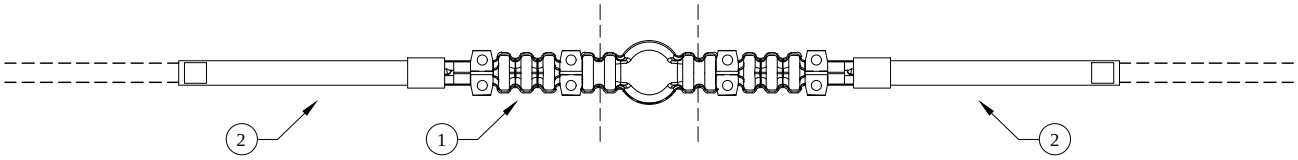

Notes:

1. Covers required on center phase only if at least 60" horizontal separation between outside phases. For high neutral, cover middle phase and neutral.
2. Use Std ACS for pin insulators and use Std ACSL for line post and vise-top insulators.

ITEM NO.	DESCRIPTION	ACS QTY.	ACS S/N
1	Avian, Cover, Single Pin Insulator, #6-795	1	2873
2	Avian, Cover, Extender, #6-795	2	2914

ITEM NO.	DESCRIPTION	ACSL QTY.	ACSL S/N
1	Avian, Cover, Single Post Insulator, #6-795	1	2874
2	Avian, Cover, Extender, #6-795	2	2914

Clark Public Utilities

CONSTRUCTION STANDARDS

AVIAN COVERS
SINGLE INSULATOR

REVISIONS

R	DATE	ENGR	OPS

PAGE: 2 of 3

AC

CAD FILE: AC

APP: CM/DK

DATE: 10-18-17

SECTION 400

SIDE VIEW

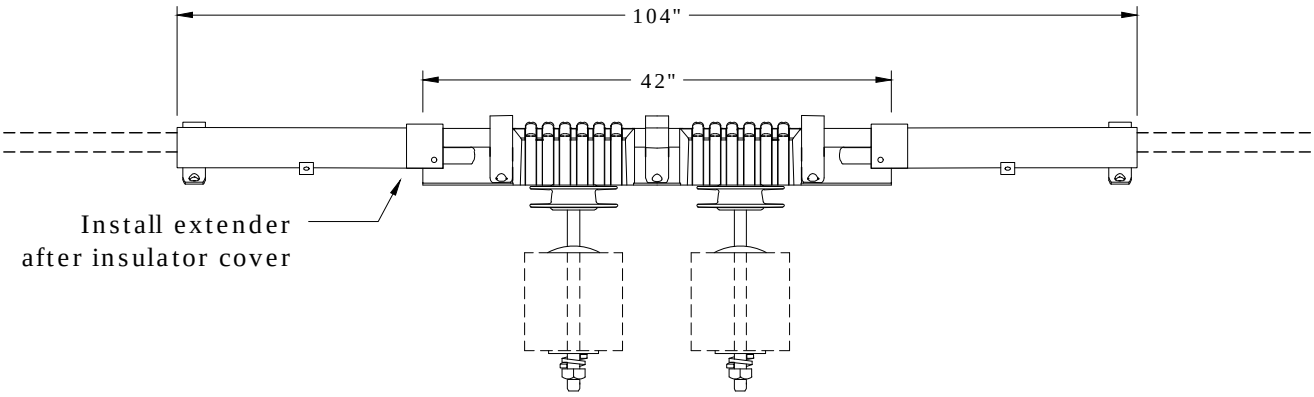

TOP VIEW

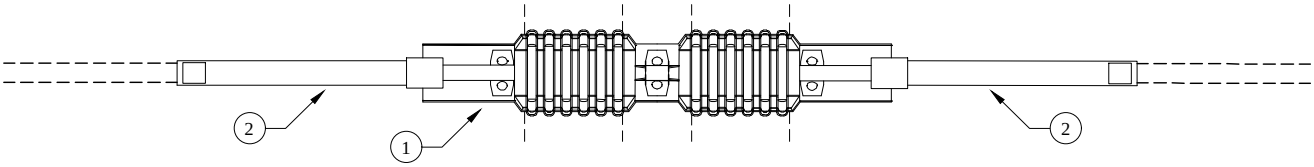

Notes:

1. Covers required on center phase only if at least 60" horizontal separation between outside phases. For high neutral, cover middle phase and neutral.
2. Use Std ACD for pin insulators and use Std ACDL for line post and vise-top insulators.

ITEM NO.	DESCRIPTION	ACD QTY.	ACD S/N
1	Avian, Cover, Double Pin Insulator, #6-795	1	2875
2	Avian, Cover, Extender, #6-795	2	2914

ITEM NO.	DESCRIPTION	ACDL QTY.	ACDL S/N
1	Avian, Cover, Double Post Insulator, #6-795	1	2876
2	Avian, Cover, Extender, #6-795	2	2914

Clark Public Utilities

CONSTRUCTION STANDARDS

AVIAN COVERS
DOUBLE INSULATOR

REVISIONS

R	DATE	ENGR	OPS

PAGE: 3 of 3

AC

CAD FILE: AC

APP: CM/DK

DATE: 10-18-17

SECTION 400

SCOPE

Bird Flight Diverters (BFDs) provide a visual image that helps birds avoid collisions with overhead power lines. When installed, the BFD increases the visible profile of the conductor.

MATERIAL

BFDs are made from rigid, high impact, UV stabilized PVC material. CPU has standardized on a gray-colored diverter. Studies have determined that color is not a determining factor of BFD effectiveness. They are designed to be used in ambient temperatures ranging from -40°F to 140°F with a maximum operating temperature of 257°F (125°C).

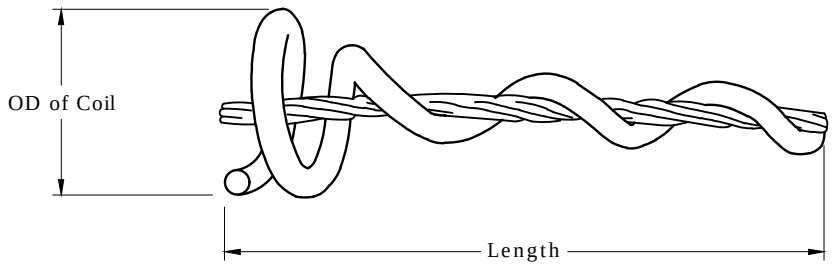

Wire Size	Stock Number	Wire Range (inches)*		Length (inches)	Coil (inches)
		MIN	MAX		
#6 Cu	N/A**				
#4 Cu	2883	0.175	0.249	7.00	2.25
#2 ACSR	2884	0.250	0.349	8.5	2.5
2/0 ACSR	2885	0.450	0.599	14.625	4.25
397 AAC***	2886	0.600	0.770	17.0	4.25
795 AAC***	2887	0.971	1.121	15.5	4.25

* Range printed on BFDs
** Not manufactured
*** Not kept in stock--let Purchasing know in advance so they can be ordered.

INSTALLATION

BFDs are installed on the topmost and outside primary conductors and can be installed on span guys, down guys and static wire. Most migratory birds will flare up and away to avoid collision with a visible conductor. BFDs are not required on lower conductors (neutral, secondary or communication cables).

The heliformed rod gripping section (the small end) of the BFD is sized to the diameter of the conductor and can be installed with a hotstick. The positive grip on the conductor ensures that the BFD remains in the applied position and cannot move along the span under aeolian vibration or other conditions. The larger helical end is designed to provide the birds a more visual reference of the line.

BFDs should be installed on alternating conductors at 15-foot intervals. See the following drawings for spacing on various framings.

All spans that have BFDs installed shall be documented on as-builts and sent to Mapping & Drafting.

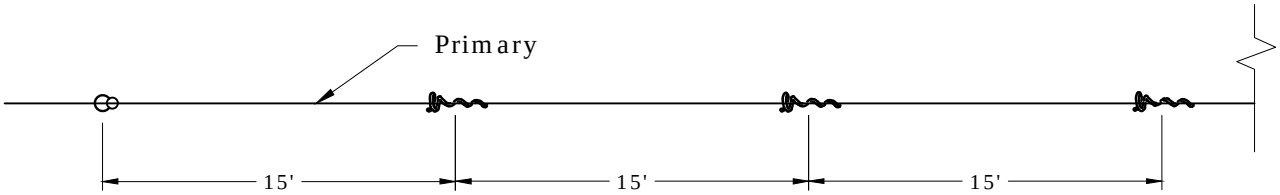

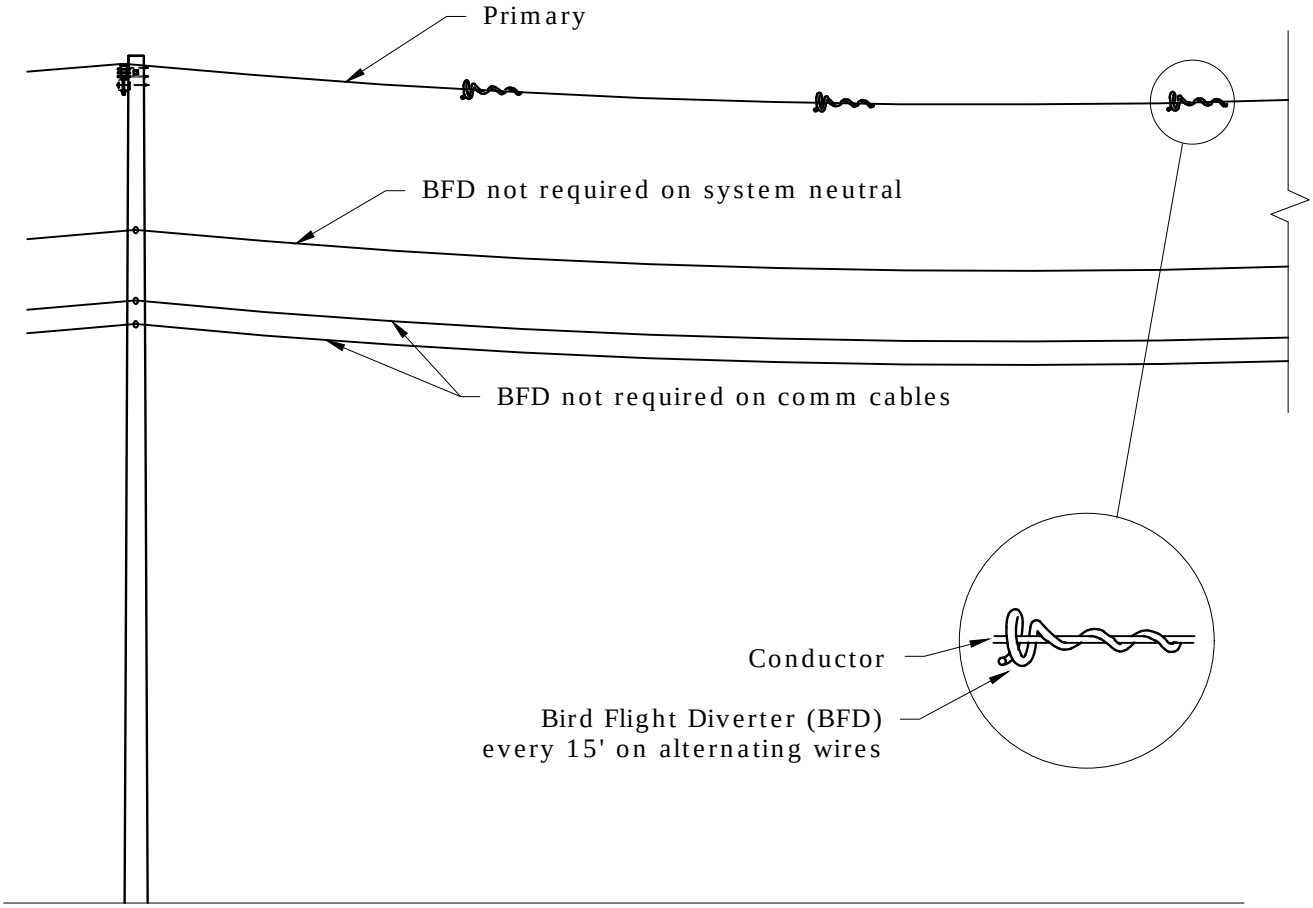

Note: All spans constructed with BFDs shall be documented by sending construction as-builts to Mapping.

Clark Public Utilities

CONSTRUCTION STANDARDS

BIRD FLIGHT DIVERTERS
1ø

REVISIONS			
R	DATE	ENGR	OPS
1			

PAGE:		CAD FILE:	APP: CM/DK	SECTION
3 of 7	BFD	BFD	DATE: 10-18-17	400

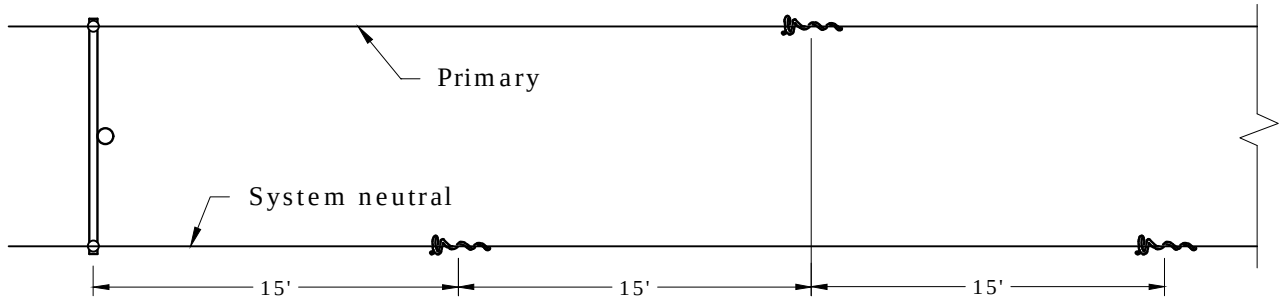

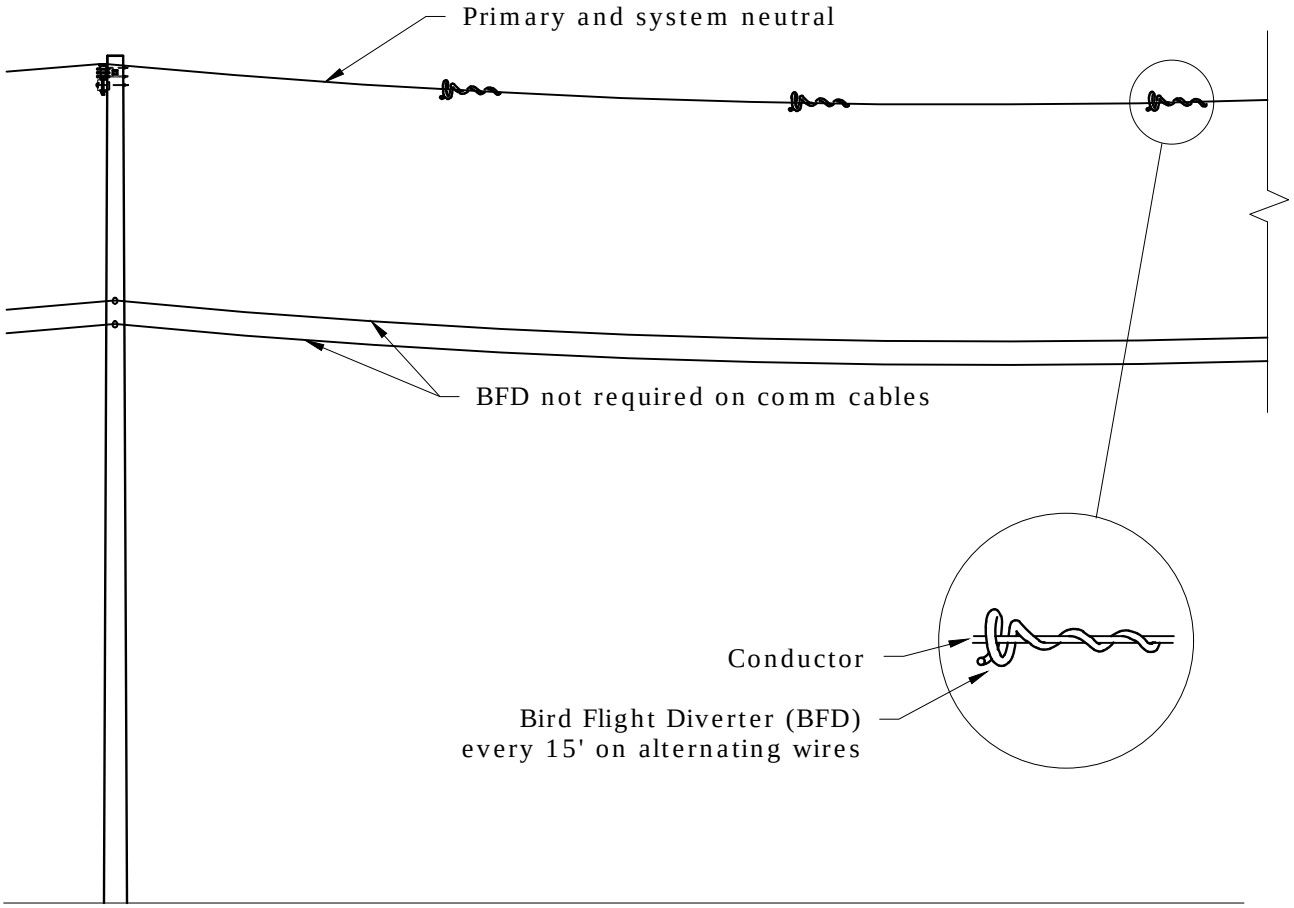

Note: All spans constructed with BFDs shall be documented by sending construction as-builts to Mapping.

Clark Public Utilities

CONSTRUCTION STANDARDS

BIRD FLIGHT DIVERTERS
1ø WITH HIGH NEUTRAL

REVISIONS			
R	DATE	ENGR	OPS
1			

PAGE:		CAD FILE:	APP: CM/DK	SECTION
4 of 7	BFD	BFD	DATE: 10-18-17	400

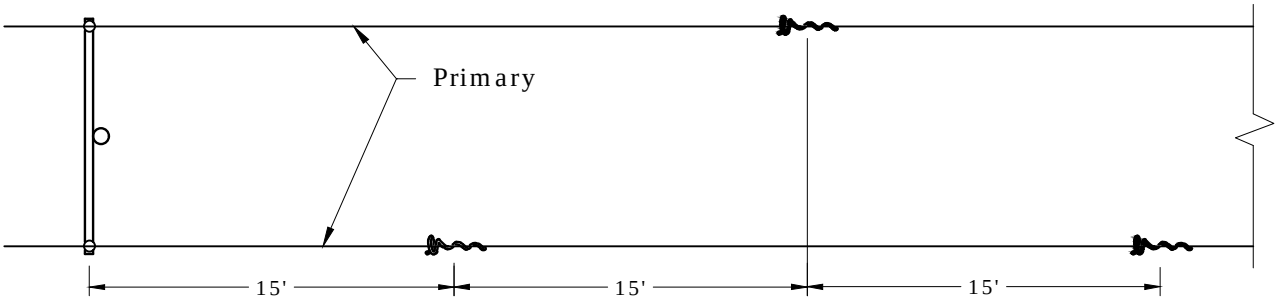

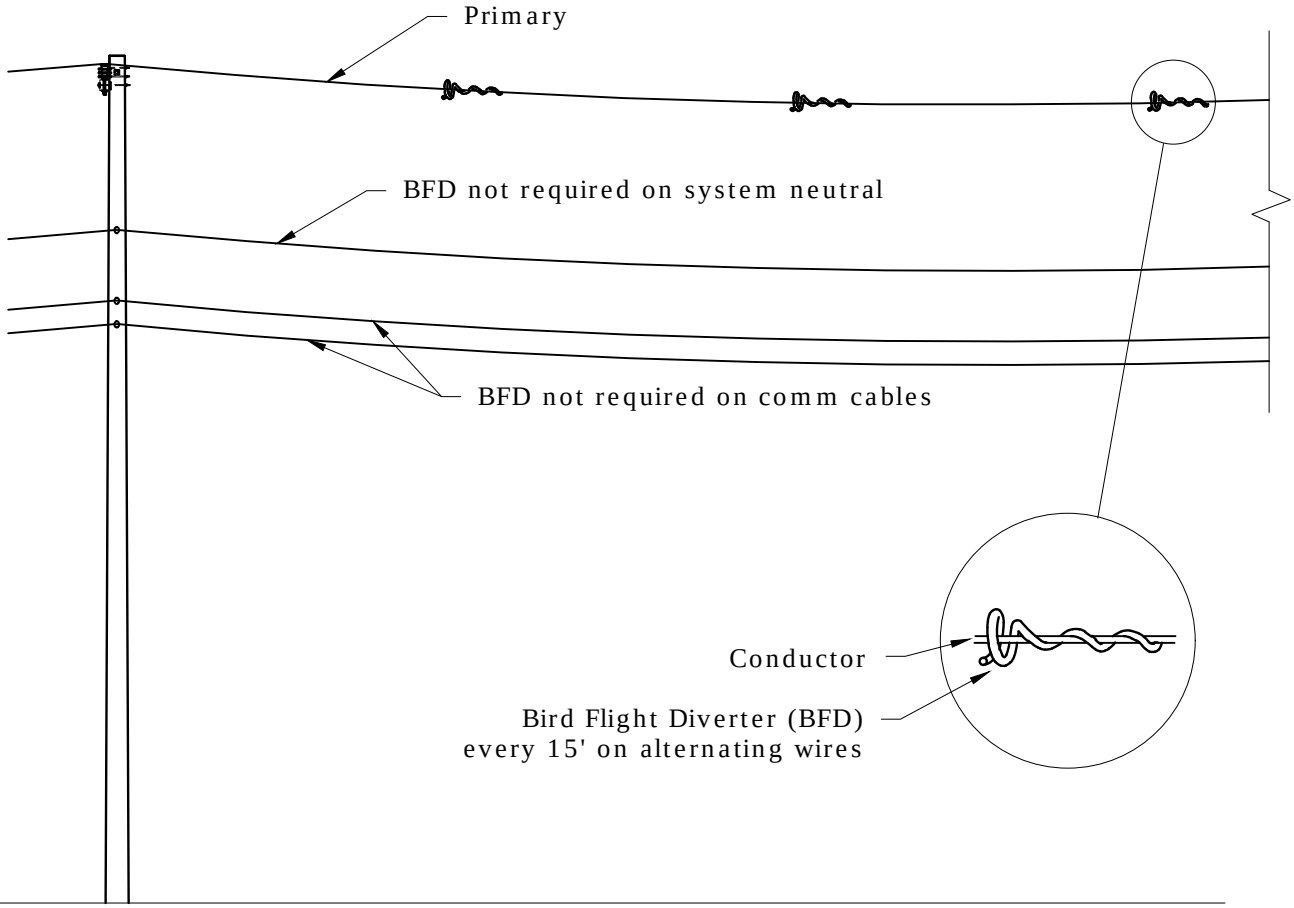

Note: All spans constructed with BFDs shall be documented by sending construction as-builts to Mapping.

Clark Public Utilities

CONSTRUCTION STANDARDS

BIRD FLIGHT DIVERTERS
2ø CROSSARM OR TWIGGY

REVISIONS			
R	DATE	ENGR	OPS
1			

PAGE: 5 of 7

BFD

CAD FILE: BFD

APP: CM/DK
DATE: 10-18-17

SECTION 400

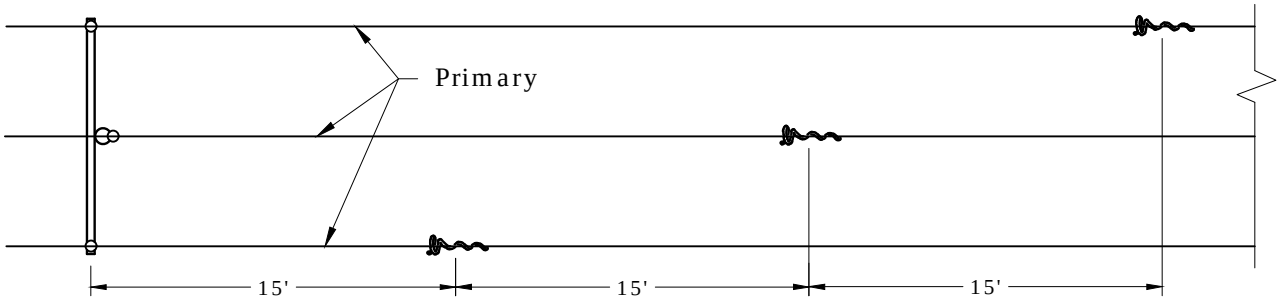

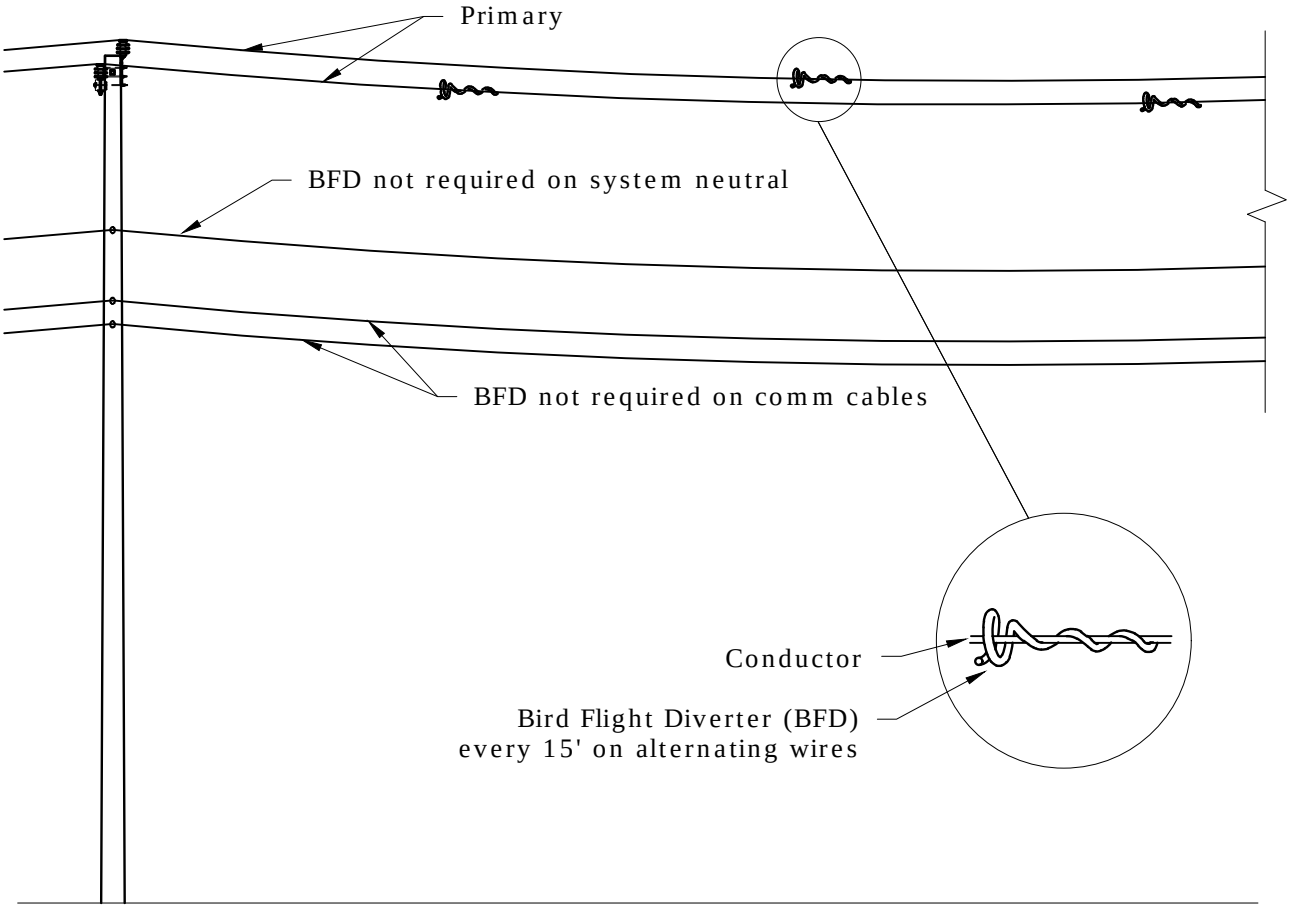

Note: All spans constructed with BFDs shall be documented by sending construction as-builts to Mapping.

Clark Public Utilities

CONSTRUCTION STANDARDS

BIRD FLIGHT DIVERTERS
3ø CROSSARM W/ TWIGGY
OR SKY PIN

REVISIONS			
R	DATE	ENGR	OPS
1			

PAGE:		CAD FILE:	APP: CM/DK	SECTION
6 of 7	BFD	BFD	DATE: 10-18-17	400

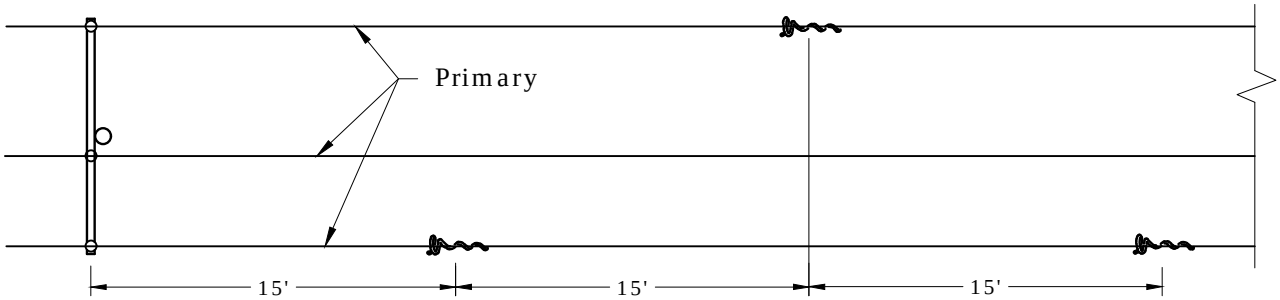

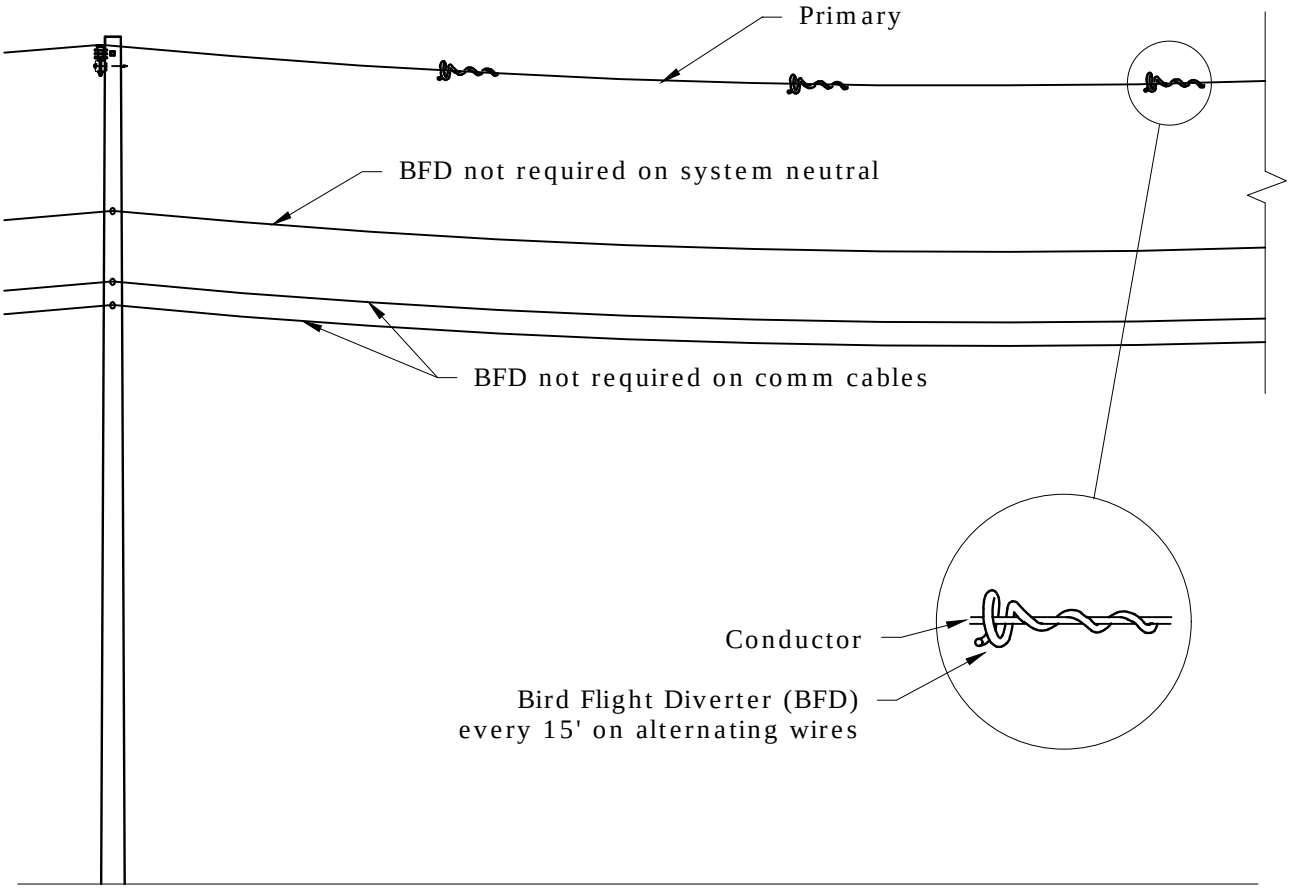

Note: All spans constructed with BFDs shall be documented by sending construction as-builts to Mapping.

Clark Public Utilities

CONSTRUCTION STANDARDS

BIRD FLIGHT DIVERTERS
3ø CROSSARM W/O SKY PIN

REVISIONS			
R	DATE	ENGR	OPS
1			

PAGE:		CAD FILE:	APP: CM/DK	SECTION
7 of 7	BFD	BFD	DATE: 10-18-17	400

Marking will vary
according to sleeve.

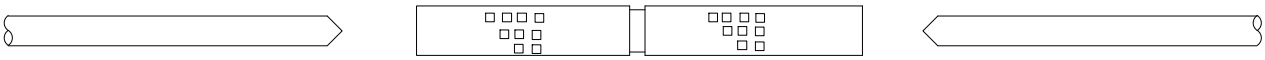

COMPRESSION SLEEVE
BEFORE SPLICING

Number of presses will
vary with sleeve length.

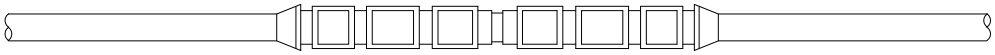

COMPRESSION SPLICE COMPLETE

Notes:

1. Clean the wire before making the splice.
2. Begin presses at center of sleeve and work toward ends, press entire length of sleeve.
3. Groove letters printed on sleeves correspond to groove letters printed on tool.

Clark Public Utilities

CONSTRUCTION STANDARDS

SPLICING GUIDE
COMPRESSION TYPE SLEEVES

REVISIONS			
R	DATE	ENGR	OPS

PAGE:		CAD FILE:	APP: ELM	SECTION
1 of 1	L4	L4	DATE: 1/31/80	400

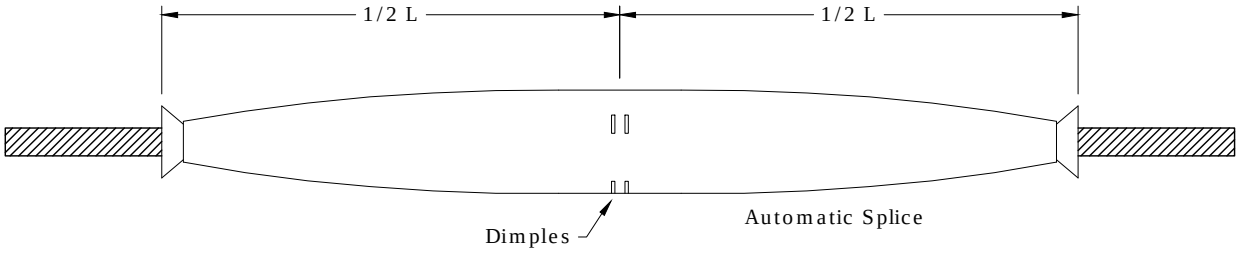

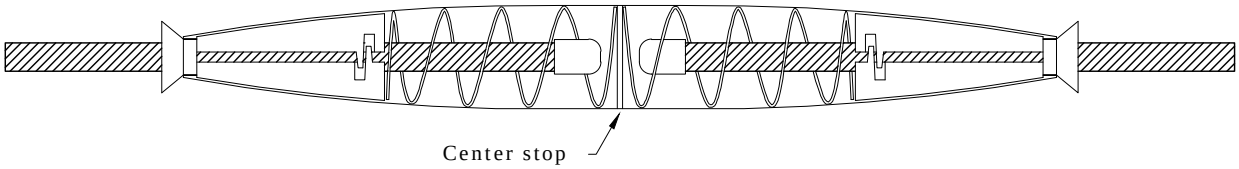

Notes:

1. Clean the wire before making the splice.
2. Measure overall length of automatic splice.
3. Check that machined dimples are holding the center stop in the center of the splice. Reject any splice that is not centered.
4. Measure and mark the conductor at a length equal to 1/2 the splice length to ensure complete insertion.
5. Wire brush the conductor to ensure electrical and mechanical contact.
6. Insert the conductor to center stop. The clamping jaws should grab with 1/2" to 1" travel.
7. Reject and replace any automatic splice that does not adequately grip the conductor.
8. Automatic splices are rated for 90% of the conductor strength.

Clark Public Utilities

CONSTRUCTION STANDARDS

SPLICING GUIDE, AUTOMATIC TYPE

REVISIONS			
R	DATE	ENGR	OPS

PAGE:		CAD FILE:	APP: ELM	SECTION
1 of 1	L5	L5	DATE: 1/31/80	400

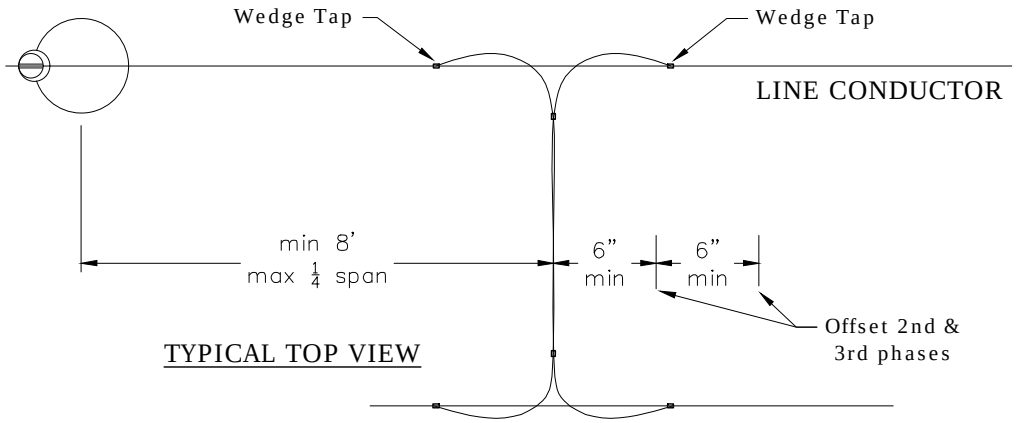

Notes:

1. Limit tap conductor "Maximum Working Tension" (MWT) to 15% of ultimate breaking strength of smallest conductor involved.
2. Minimum of three (3) feet of vertical spacing between phase conductors for two & three phase installations.

SLACK SPAN TAP (L6)

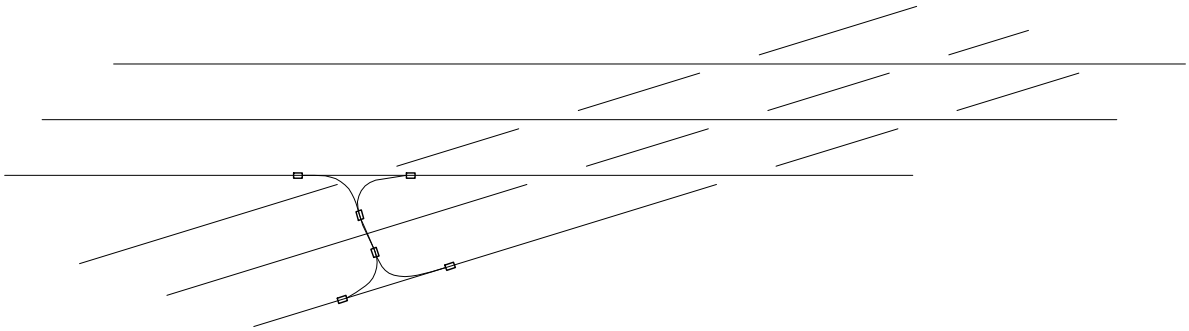

Notes:

1. Minimum of four (4) feet of between circuits with five (5) foot normal spacing.
2. Jumpers to be slack & same conductor as line conductor.

FLYING TAP (L7)

REV 1 - Redrawn in CAD

Clark Public Utilities

CONSTRUCTION STANDARDS

MIDSPAN TAPS
DISTRIBUTION

REVISIONS			
R	DATE	ENGR	OPS
1			

1 REDRAWN IN CAD

PAGE:		CAD FILE:	APP: ELM	SECTION
1 of 1	L6, L7	L6	DATE: 1/31/80	400

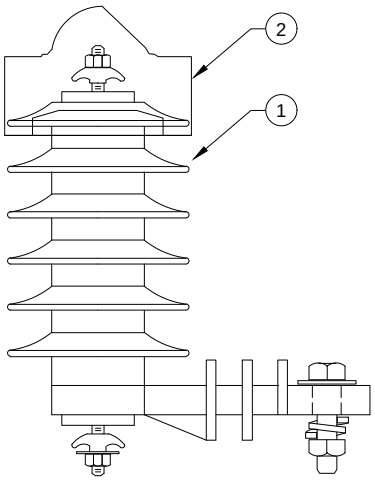

ITEM NO.	DESCRIPTION	LA1	
		QTY.	S/N
1	Arrester, Surge, 9kV, MOV, Riser Pole	1	58
2	Guard, Wildlife, Polymer Arrester	1	2583 ✡

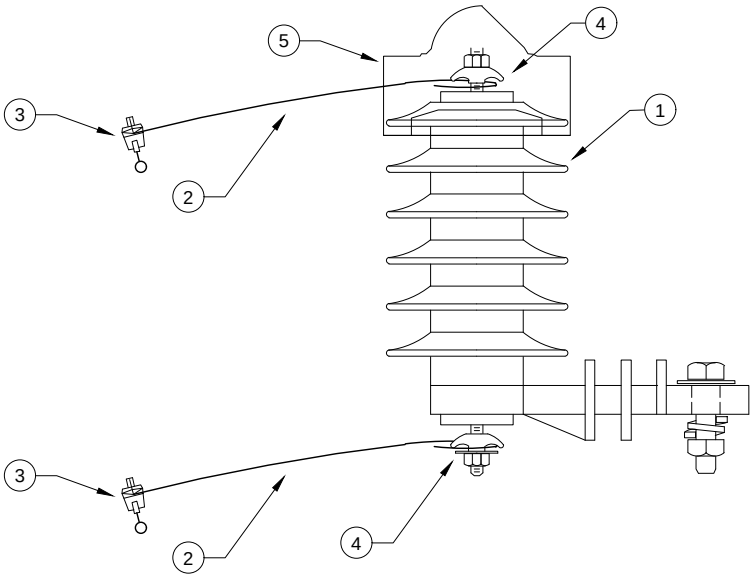

Rev 3: Added Hotline Clamps, Wildlife Guard, One-Hole Compression Lugs, and increased amount of #4 red wire.

ITEM NO.	DESCRIPTION	LA2	
		QTY.	S/N
1	Arrester, Surge, 9kV, MOV, Riser Pole	1	58
2	Conductor, Cu, 1/C, #4, 7-Str, 600V, Red, THW	7 ✡	2512
3	Clamp, Hotline GP 1520, #8 to 2/0 Str, Cu Only	2	283 ✡
4	Connector, Compression Lug, #4, Cu/Al, One-Hole, Tin-Plated, For Arrester	2	2548 ✡
5	Guard, Wildlife, Polymer Arrester	1	2583 ✡

Clark Public Utilities

CONSTRUCTION STANDARDS

LIGHTNING (SURGE) ARRESTER

REVISIONS

R	DATE	ENGR	OPS
1	2/23/00	HWH/JEH	MA
2	12/14/09	KJP	
3	1/16/19	CM	DK

PAGE: 1 of 1

LA1,LA2

CAD FILE: LA1

APP: ELM

DATE: 1/31/80

SECTION 400

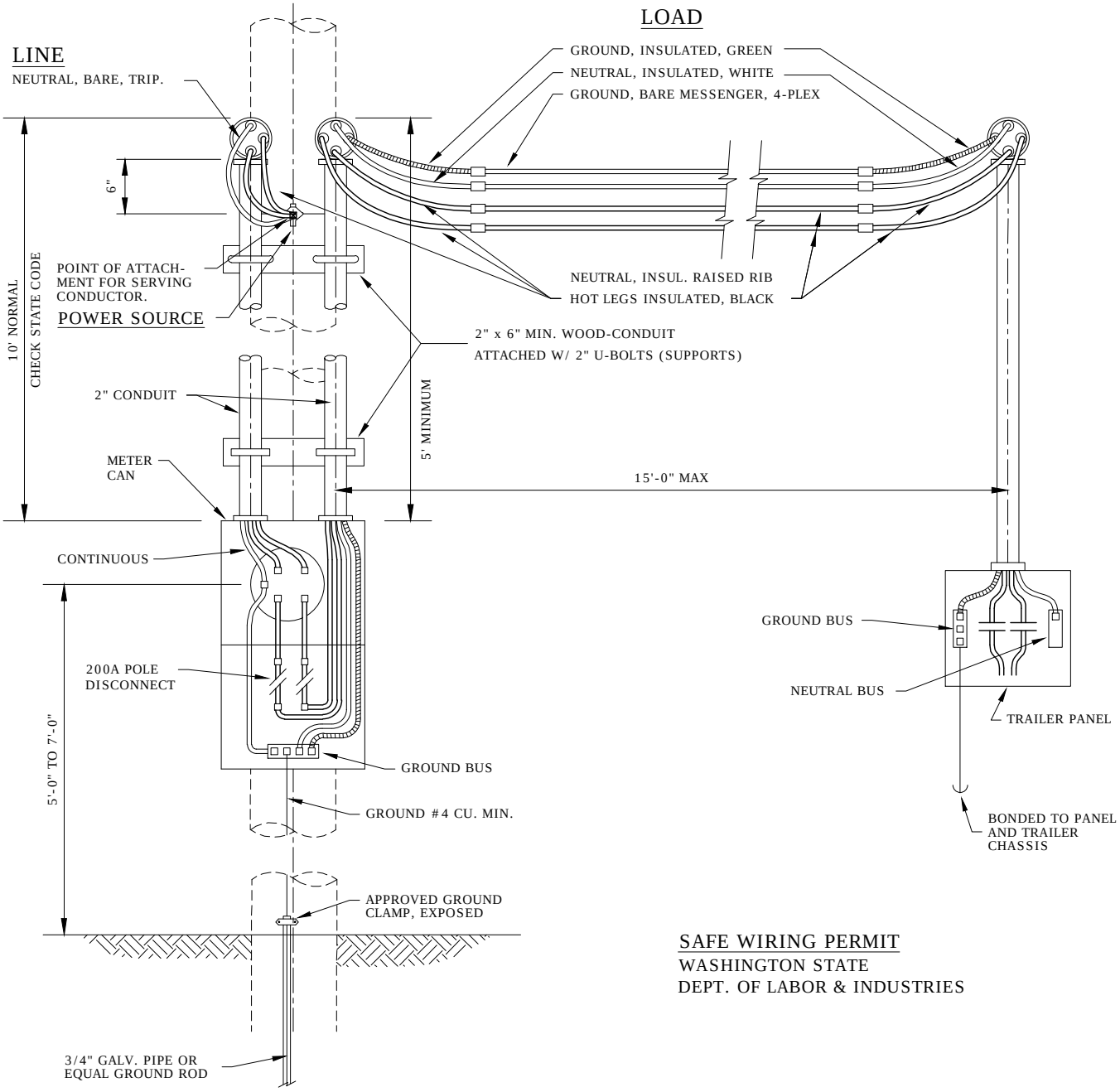

SAFE WIRING PERMIT
WASHINGTON STATE
DEPT. OF LABOR & INDUSTRIES

Notes:

1. TRAILER SERVICES WILL NOT BE ENERGIZED UNTIL CUSTOMER HAS MADE CONNECTIONS BETWEEN DISCONNECT & TRAILER OR UNLESS PUD INSTALLS SAME.
2. GROUND BUS & NEUTRAL BUS ARE NOT INTERCONNECTED IN TRAILER PANEL.
3. DO NOT DEAD END LINE AND LOAD CONDUCTORS ON SAME BOLT AT SERVICE POLE.
4. CUSTOMER MUST HAVE: (A) GROUND ROD DRIVEN; (B) GROUND WIRE CONNECTED TO GROUND BUS; (C) SUPPORTS ATTACHED TO CONDUITS W/ U-BOLTS BEFORE PUD WILL ATTACH LOOP TO POLE USING 20 PENNY NAILS AND SCREWS SUPPLIED BY CUSTOMER.

Clark Public Utilities

CONSTRUCTION STANDARDS

MOBILE HOME TRAILER
CONNECTION

REVISIONS

R	DATE	ENGR	OPS
1	7/10/81	GGW	
2	2/15/10	REDRAWN	IN CAD

PAGE:		CAD FILE:	APP: ELM	SECTION
1 of 1	SE10	SE10	DATE: 1/31/80	400

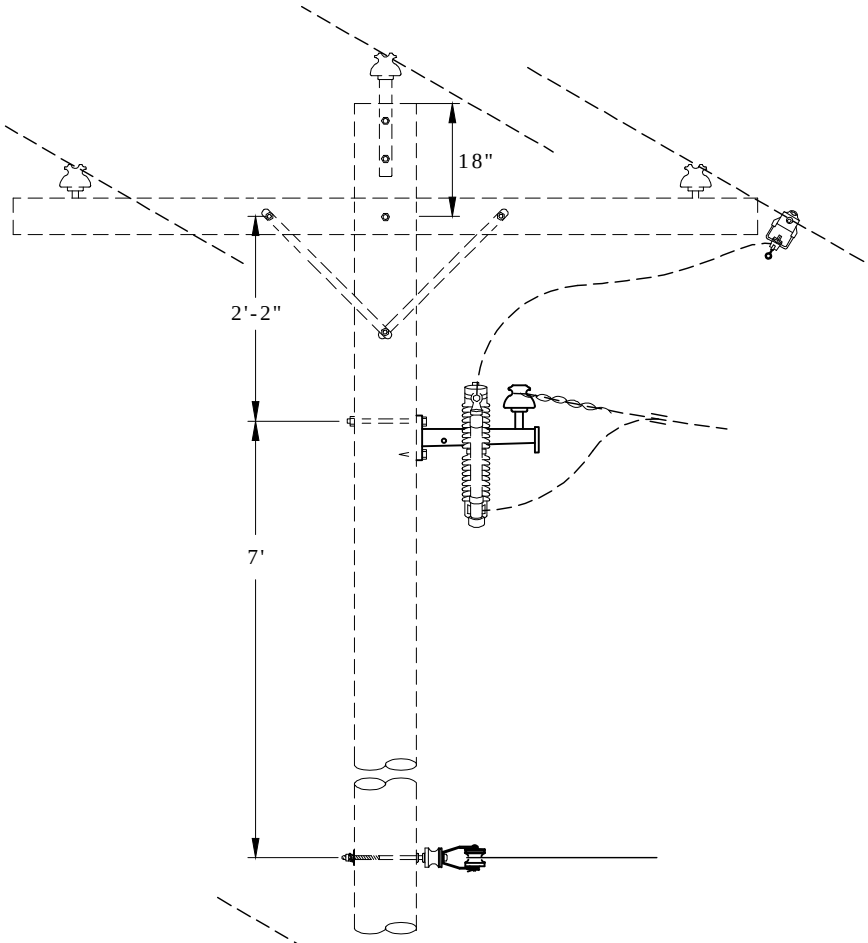

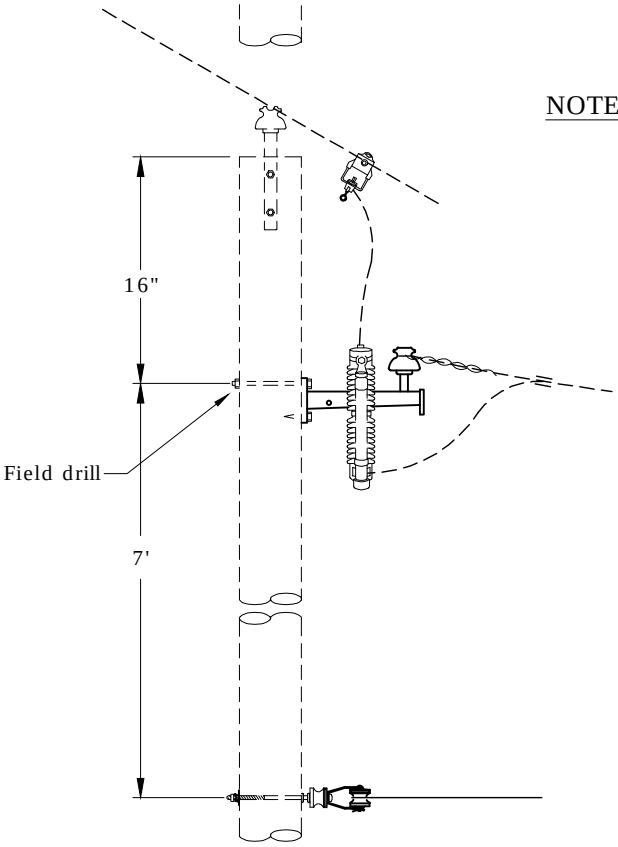

NOTES:

1. A slack span should be kept as short as possible. It should not exceed 100 feet.
2. Call for cutout separately if needed.
3. Call for preformed slack span deadend separately.
   #2 ACSR - S/N 2241
   2/0 ACSR - S/N 2242

Rev 2: Updated material & drawing, and changed title

Clark Public Utilities

CONSTRUCTION STANDARDS

1Ø SLACK SPAN
2/0 ACSR MAX WIRE

REVISIONS

R	DATE	ENGR	OPS
1	3/02	REDRAWN	IN CAD
2	8/25/09	CM	AH

PAGE:		CAD FILE:	APP: GGW/RWG	SECTION
1 of 2	SS1	SSD1	DATE: 6/90	400

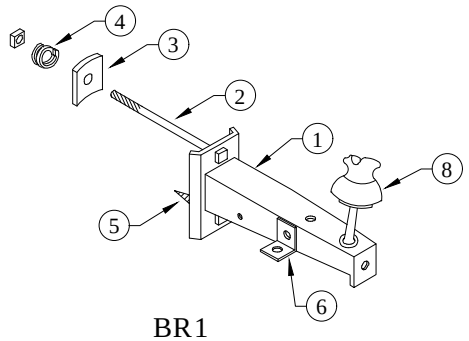

BR1

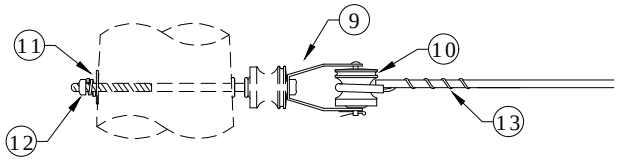

S4A

Rev 2: Updated material & drawing, and changed title

ITEM NO.	DESCRIPTION	BR1	
		QTY.	S/N
1	Bracket, Steel, Galv., Multi-purpose, 22"	1	2262
2	Bolt, Machine, 5/8"x 16"	1	157
3	Washer, Sq., Curved, Cast, 3"x 3" x 3/8" Thick x 13/16" Hole	1	1392
4	Washer, Spring, 5/8"	1	2217
5	Screw, Lag, 1/2" x 4 1/2"	1	1132
6	Adapter, Angle Clip	1	2248
7	Short Shank Insulator Pin (6")	1	2249
8	Porcelain Pin Insulator C-neck	1	771

ITEM NO.	DESCRIPTION	S4A	
		QTY.	S/N
9	Clevis, D.E., Insulator 1340	1	335
10	Insulator, Spool Clevis, Small	1	773
11	Washer, Lock, 5/8" Galv.	1	1403
12	Nut, Square, 5/8" Galv.	1	923
13	Preformed Slack Span Deadend #2 ACSR	1	2241

Clark Public Utilities

CONSTRUCTION STANDARDS

1Ø SLACK SPAN
2/0 ACSR MAX WIRE

REVISIONS

R	DATE	ENGR	OPS
1	3/02	REDRAWN	IN CAD
2	8/25/09	CM	AH

PAGE: 2 of 2

SS1

CAD FILE: SSD1

APP: GGW/RWG
DATE: 6/90

SECTION 400

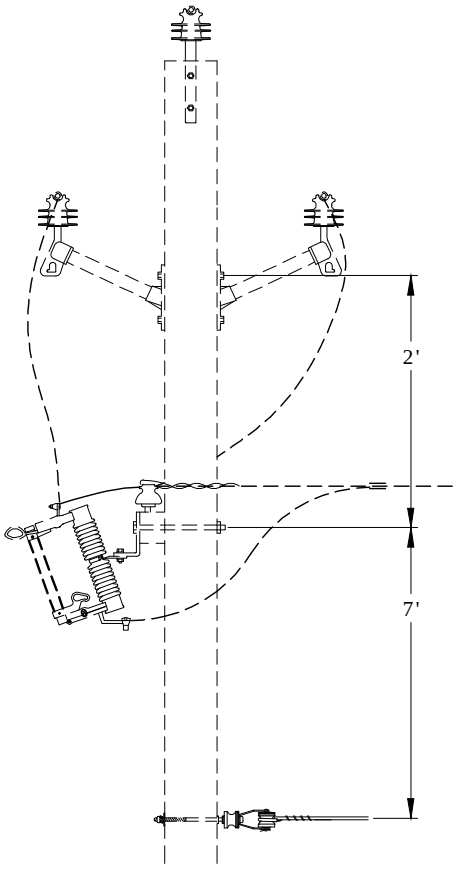

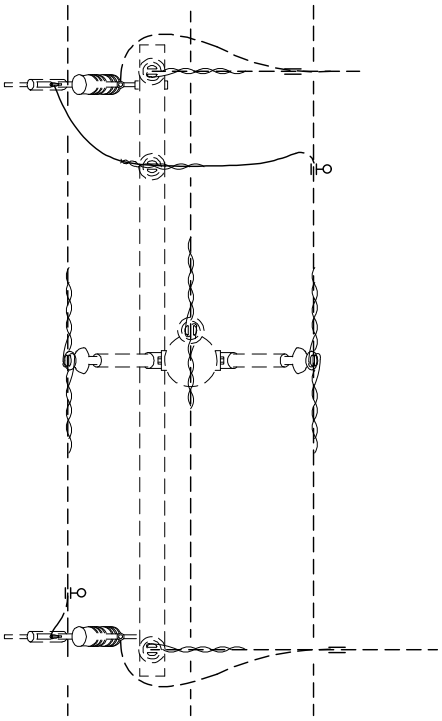

NOTES:

1. Pull conductors hand tight. Excessive slack may cause phase-to-phase contact due to wind.
2. A slack span should be kept as short as possible. It should not exceed 100 feet.
3. The deflection angles of the conductors at the crossarms must not exceed 25 degrees due to the reduced separation. Further reduction may cause phase-to-phase contact under windy conditions.
4. This construction can be used for crossarm framing also.
5. Call for cutouts separately if needed.
6. Call for preformed slack span deadend separately.
   #2 ACSR -S/N 2241
   2/0 ACSR -S/N 2242

Rev 2: Updated material & drawings, and changed title

Clark Public Utilities

CONSTRUCTION STANDARDS

2Ø SLACK SPAN
2/0 ACSR MAX WIRE

REVISIONS

R	DATE	ENGR	OPS
1	3/02	REDRAWN	IN CAD
2	8/25/09	CM	AH

PAGE: 1 of 2

SS2

CAD FILE: SS2

APP: GGW/RWG

DATE: 4/92

SECTION 400

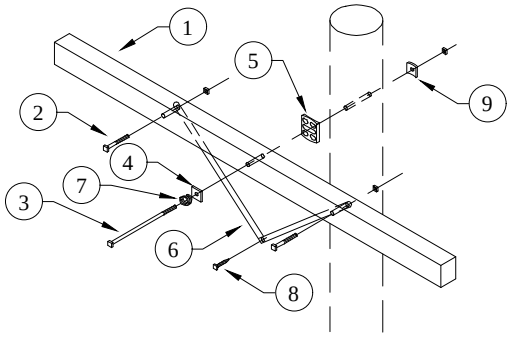

CR20A

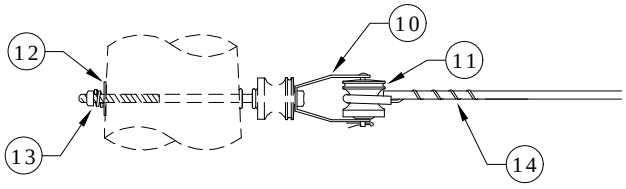

S4A

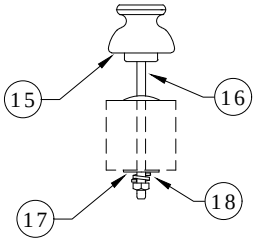

Rev 2: Updated material & drawings, and changed title

ITEM NO.	DESCRIPTION	CR20A QTY.	CR20A S/N
1	Arm, Cross (Distr.), 3 3/4" x 4 3/4"	1	25
2	Bolt, Carriage 3/8" x 5"	2	78
3	Bolt, Machine 5/8" x 16"	1	157
4	Washer, Sq. Flat 5/8", 2 1/4" x 2 1/4"	1	1412
5	Gain, Pole Plastic	1	709
6	Brace, Crossarm 28"	2	205
7	Washer, Spring, 5/8"	1	2217
8	Screw, Lag 1/2" x 4 1/2"	1	1132
9	Washer, Curved, Square, Cast, 3" x 3" x 3/8" Thick x 13/16" Hole	1	1392
ITEM NO.	**DESCRIPTION**	**S4A QTY.**	**S4A S/N**
10	Clevis, D.E., Insulator 1340	1	335
11	Insulator, Spool Clevis, Small	1	773
12	Washer, Lock, 5/8" Galv.	1	1403
13	Nut, Square, 5/8" Galv.	1	923
14	Preformed Slack Span Deadend #2 ACSR	1	2241
ITEM NO.	**DESCRIPTION**	**ADDITIONAL MATERIAL QTY.**	**ADDITIONAL MATERIAL S/N**
15	Insulator, Pin C Neck	2	771
16	Crossarm Pin	2	961
17	Washer, Square, Flat 5/8", 2 1/4" x 2 1/4"	2	1412
18	Washer, Spring, 5/8"	2	2217

Clark Public Utilities

CONSTRUCTION STANDARDS

2Ø SLACK SPAN
2/0 ACSR MAX WIRE

REVISIONS

R	DATE	ENGR	OPS
1	3/02	REDRAWN	IN CAD
2	8/25/09	CM	AH

PAGE: 2 of 2

SS2

CAD FILE: SS2

APP: GGW/RWG

DATE: 4/92

SECTION 400

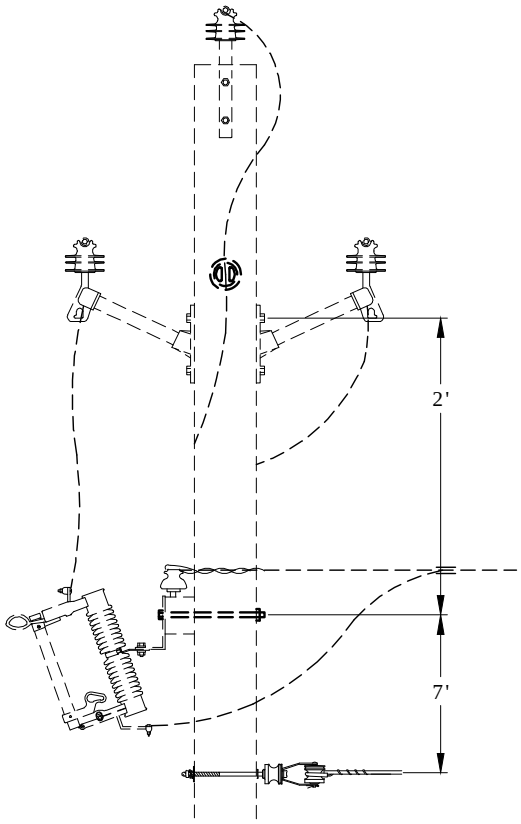

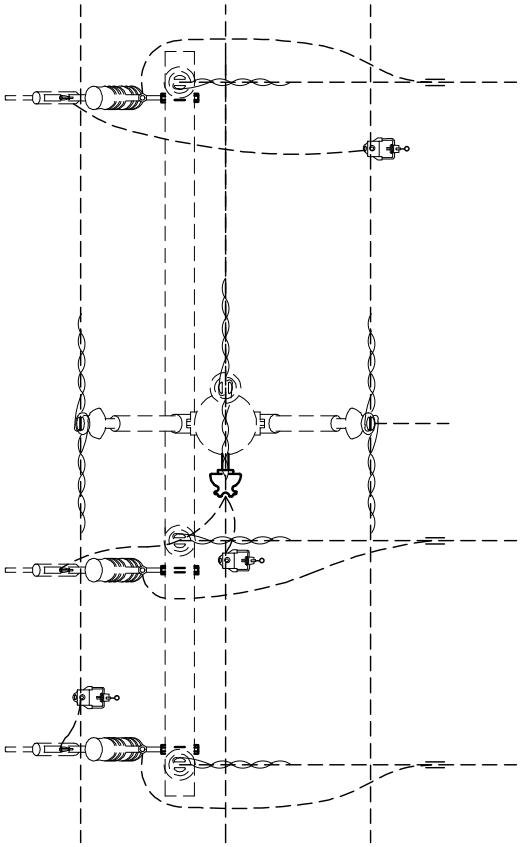

NOTES:

1. Pull conductors hand tight. Excessive slack may cause phase-to-phase contact due to wind.
2. A slack span should be kept as short as possible. It should not exceed 100 feet.
3. The deflection angles of the conductors at the crossarms must not exceed 25 degrees due to the reduced separation. Further reduction may cause phase-to-phase contact under windy conditions.
4. This construction can be used for crossarm framing also.
5. Call for cutouts separately if needed.
6. Call for preformed slack span deadend separately.
   #2 ACSR -S/N 2241
   2/0 ACSR -S/N 2242

Rev 3: Changed CR21A to CR20A on material issue.

Clark Public Utilities

CONSTRUCTION STANDARDS

3Ø SLACK SPAN
2/0 ACSR MAX WIRE

REVISIONS

R	DATE	ENGR	OPS
1	3/02	REDRAWN	IN CAD
2	8/25/09	CM	AH
3	7/29/10	KJP	

PAGE: 1 of 2

SS3

CAD FILE: SS3

APP: GGW/JCS

DATE: 5/90

SECTION 400

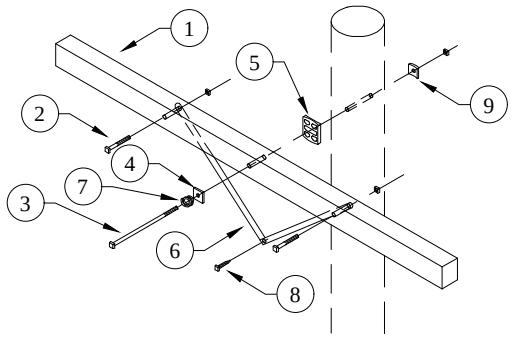

CR20A

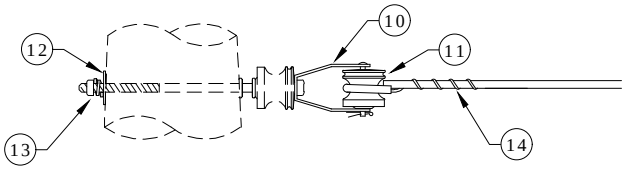

S4A

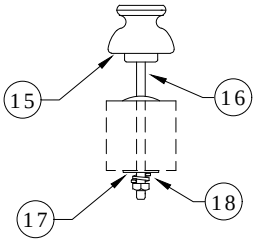

Rev 3: Changed CR21A to CR20A on material issue.

ITEM NO.	DESCRIPTION	SS3 CR20A QTY.	S/N
1	Arm, Cross (Distr.), 3 3/4" x 4 3/4"	1	25
2	Bolt, Carriage 3/8" x 5"	2	78
3	Bolt, Machine 5/8" x 16"	1	157
4	Washer, Sq. Flat 5/8", 2 1/4" x 2 1/4"	1	1412
5	Gain, Pole Plastic	1	709
6	Brace, Crossarm 28"	2	205
7	Washer, Lock, Spring, Double Coil, Galv., 5/8"	1	2217
8	Screw, Lag 1/2" x 4 1/2"	1	1132
9	Washer, Curved, Square, Cast, 3" x 3" x 3/8" Thick x 13/16" Hole	1	1392
ITEM NO.	**DESCRIPTION**	**S4A QTY.**	**S/N**
10	Clevis, D.E., Insulator 1340	1	335
11	Insulator, Spool Clevis, Small	1	773
12	Washer, Lock, Spring, Single Coil, Galv., 5/8"	1	1403
13	Nut, Square, 5/8" Galv.	1	923
14	Preformed Slack Span Deadend #2 ACSR	1	2241
ITEM NO.	**DESCRIPTION**	**ADDITIONAL MATERIAL QTY.**	**S/N**
15	Insulator, Pin C Neck	3	771
16	Crossarm Pin	3	961
17	Washer, Square Flat 5/8", 2 1/4" x 2 1/4"	3	1412
18	Washer, Lock, Spring, Double Coil, Galv., 5/8"	3	2217

Clark Public Utilities

CONSTRUCTION STANDARDS

3Ø SLACK SPAN
2/0 ACSR MAX WIRE

REVISIONS

R	DATE	ENGR	OPS
1	3/02	REDRAWN	IN CAD
2	8/25/09	CM	AH
3	7/29/10	KJP	

PAGE: 2 of 2

SS3

CAD FILE: SS3

APP: GGW/JCS

DATE: 5/90

SECTION 400

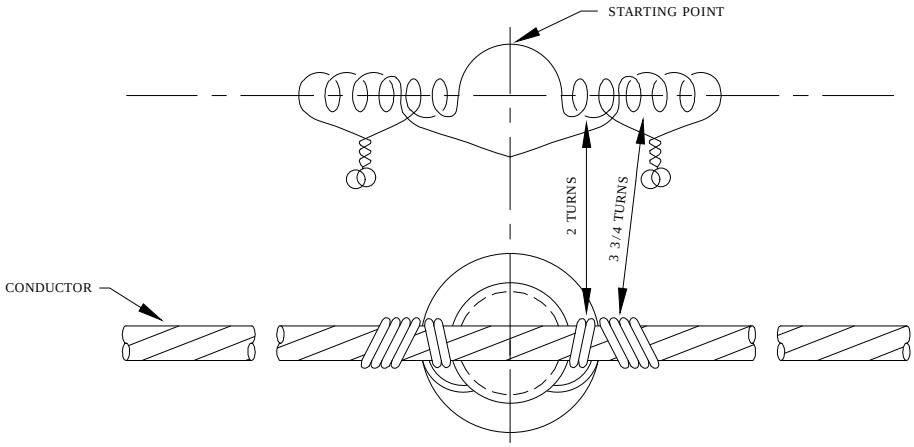

TOP GROOVE TIE

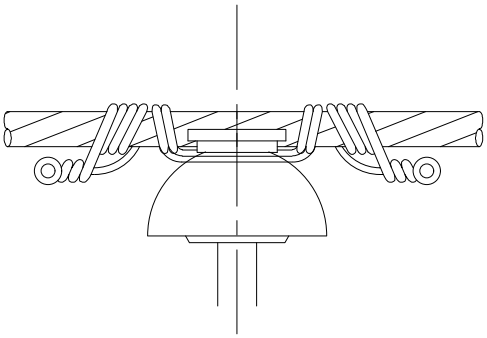

ELEVATION
TOP GROOVE TIE

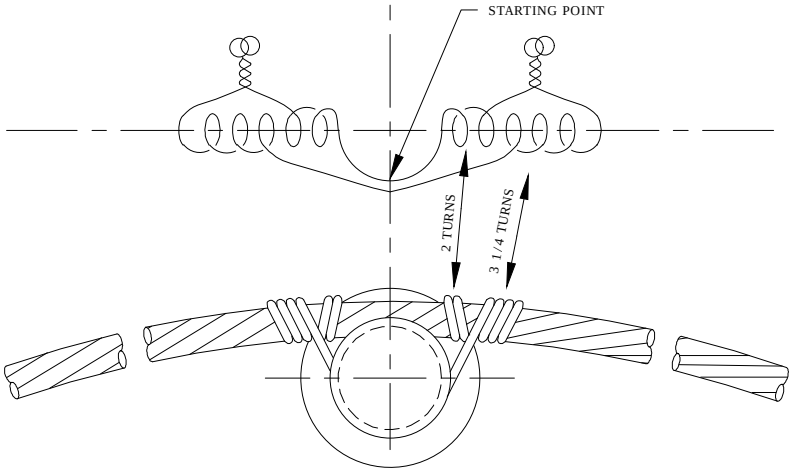

SIDE GROOVE TIE

NOTES:

1. TIE WIRE ASSEMBLY SHOULD BE AS TIGHT AS CAN BE WRAPPED BY HAND, AND ENDS TWISTED WITH PLIERS OR HOT LINE TOOLS. TWIST LEFTHAND ENDS CLOCKWISE, RIGHTHAND COUNTERCLOCKWISE. WITH HOT LINE LOOPS, TIE WIRES MUST BE 8" LONGER THAN SHOWN.
2. TIE WIRES LENGTHS LISTED BELOW CAN BE USED WITH INSULATORS HAVING NECK DIAMETER UP TO AND INCLUDING 3 ½".

CONDUCTOR	CONDUCTOR DIAMETER
3/0 - 7 STRAND HD COPPER	.464"
2/0 - 7 STRAND HD COPPER	.414"
1/0 - 7 STRAND HD COPPER	.368"
2-3 STRAND COPPER	.320"
4A COPPERWELD - COPPER	.290"
4 COPPER WIRE	.204"
6 COPPER WIRE	.162"
6A COPPERWELD - COPPER	.230"
8A & 8D COPPERWELD - COPPER	.219"

ANNEALED COPPER TIE WIRE		
SIZE	LENGTH SHORT PIECE	LENGTH LONG PIECE
4	27"	40"
4	27"	40"
4	27"	40"
6	23"	35"
6	23"	35"
6	23"	35"
8	21"	30"
8	21"	30"
8	21"	30"

Clark Public Utilities

CONSTRUCTION STANDARDS

SINGLE INSULATOR
TWO-PIECE TIE
COPPER TYPE CONDUCTORS

REVISIONS

R	DATE	ENGR	OPS
1	2/15/10	REDRAWN	IN CAD

PAGE: 1 of 1

TI2

CAD FILE: TI2

APP: ELM
DATE: 1/31/80

SECTION 400

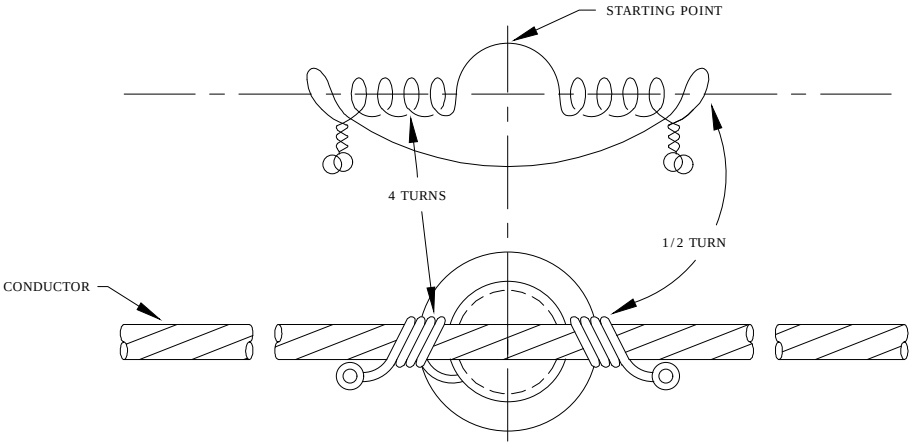

TOP GROOVE TIE

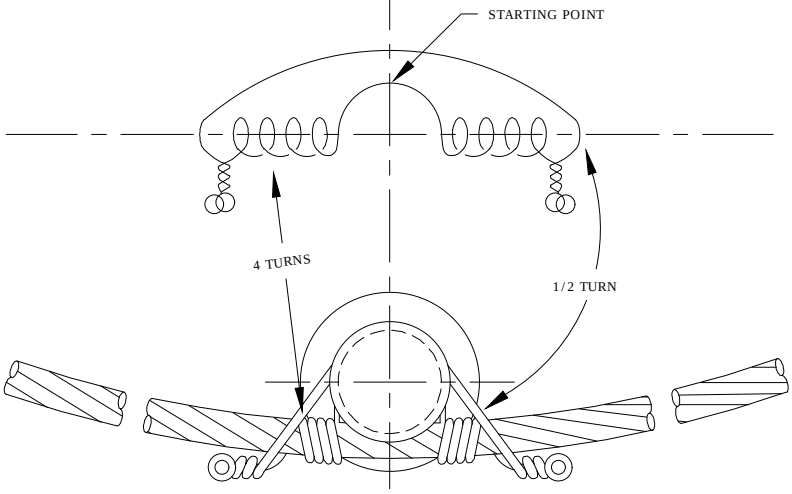

SIDE GROOVE TIE

NOTES:

1. TIE WIRE ASSEMBLY SHOULD BE AS TIGHT AS CAN BE WRAPPED AND ENDS TWISTED WITH HOT LINE TOOLS. TWIST LEFTHAND ENDS CLOCKWISE, RIGHTHAND COUNTERCLOCKWISE.
2. TIE WIRES LENGTHS LISTED BELOW CAN BE USED WITH INSULATORS HAVING A NECK DIAMETER UP TO AND INCLUDING 3 ½".

COPPERWELD COPPER	
SIZE	COND. DIAM.
2F	.308
2A	.366
3A	.326
4A	.290
5A	.258
6A	.230
7A	.223
8A	.199

ANNEALED COPPER TIE WIRE			COPPER	
SIZE AWG	FIRST PIECE	SECOND PIECE	SIZE	COND. DIAM.
6	34"	24"	4/0-7W	.308
6	36"	24"	3/0-7W	.366
6	34"	24"	2/0-7W	.326
6	33"	24"	1/0-7W	.290
6	33"	24"	2-3W	.258
6	32"	23"	2-SOL	.230
6	32"	23"	4-SOL	.223
6	31"	23"	6-SOL	.199

ANNEALED COPPER TIE WIRE		
SIZE AWG	FIRST PIECE	SECOND PIECE
6	38"	29"
6	37"	28"
6	37"	28"
6	36"	27"
6	34"	25"
6	33"	24"
6	32"	23"
6	30"	22"

Clark Public Utilities

CONSTRUCTION STANDARDS

HOT LINE
COPPER TYPE CONDUCTORS

REVISIONS			
R	DATE	ENGR	OPS

PAGE: 1 of 1

TI3

CAD FILE: TI3

APP:

DATE:

SECTION 400

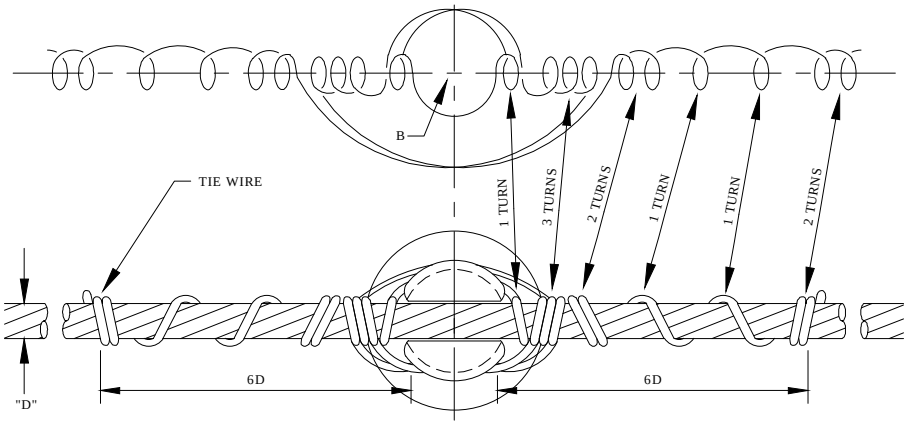

TOP GROOVE DOUBLE TIE

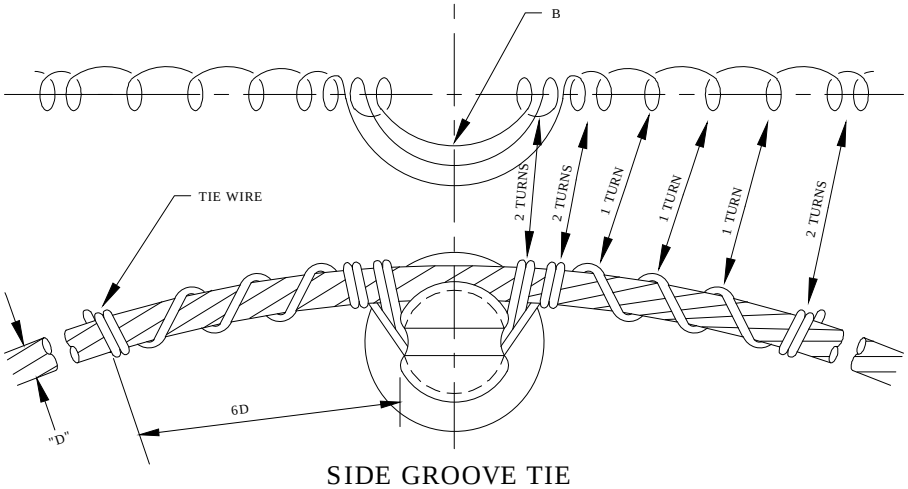

SIDE GROOVE TIE

NOTES:

1. IN MAKING TIES, START WITH MIDDLE OF LENGTH OF TIE WIRE AT POSITION MARKED "B".
2. TO COMPLETE TIE, CINCH UP LAST TWO TURNS AT EACH END WITH PLIARS UNTIL TIE WIRE IS SNUG AND TIGHT.

A.C.S.R.	
SIZE	DIAM. INCHES
4/0	.563
3/0	.502
2/0	.477

TIE WIRE ALUMINUM	
SIZE	LENGTH FEET
4	9'-3"
4	8'-9"
4	8'-3"

A.C.S.R.	
SIZE	DIAM. INCHES
1/0	.398
2	.325
4	.257

TIE WIRE ALUMINUM ALLOY	
SIZE	LENGTH FEET
6	8'-3"
6	7'-5"
6	7'-3"

Clark Public Utilities

CONSTRUCTION STANDARDS

SINGLE INSULATOR
ALUMINUM ALLOY, ACSR CONDUCTOR,
STRAIGHT OR PREFORMED ARMOR RODS

REVISIONS			
R	DATE	ENGR	OPS

PAGE:		CAD FILE:	APP:	SECTION
1 of 1	TI4	TI4	DATE:	400

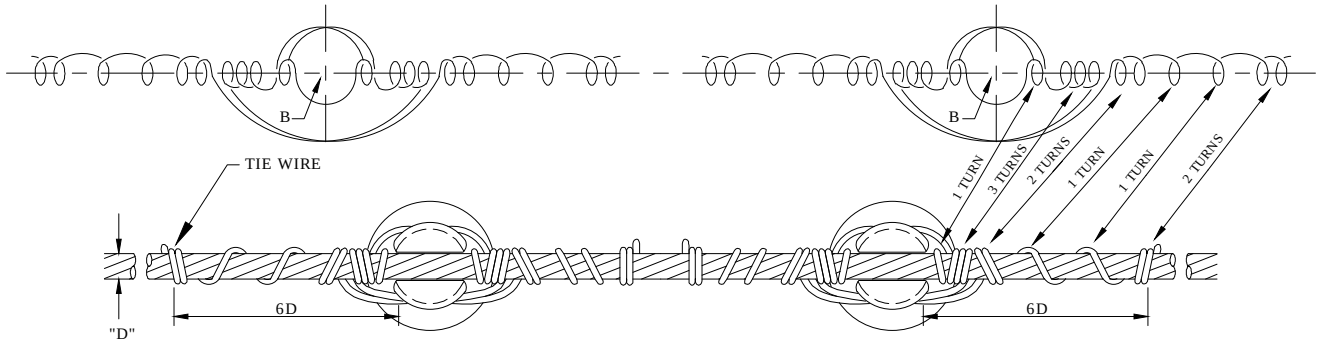

TOP GROOVE DOUBLE TIE

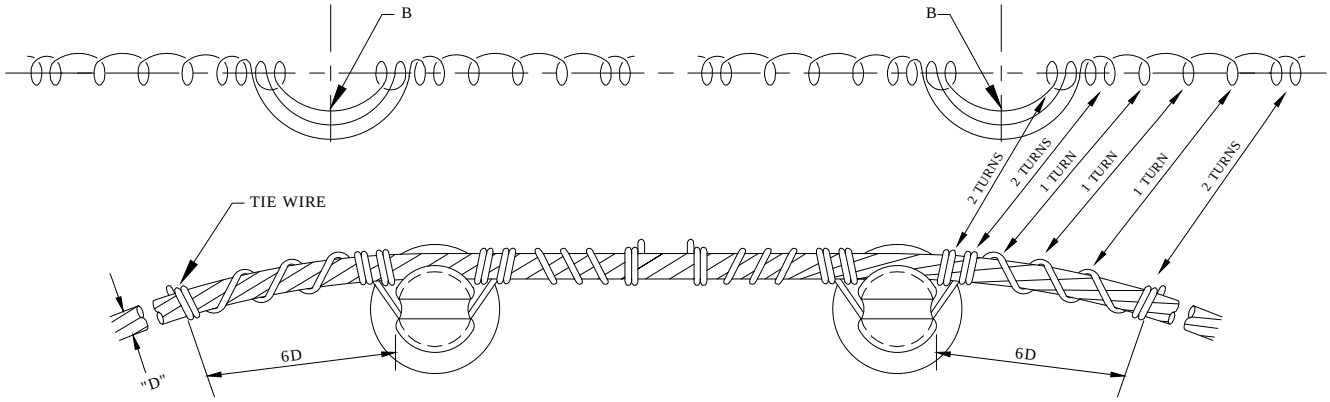

SIDE GROOVE TIE

NOTES:

1. IN MAKING TIES, START WITH MIDDLE OF LENGTH OF TIE WIRE AT POSITION MARKED "B".
2. TO COMPLETE TIE, CINCH UP LAST TWO TURNS AT EACH END WITH PLIARS UNTIL TIE WIRE IS SNUG AND TIGHT.
3. USE THE FLAT FACE OF THE PLIERS AGAINST THE AMOR RODS.

A.C.S.R.	
SIZE	DIAM. INCHES
4/0	.563
3/0	.502
2/0	.477

TIE WIRE ALUMINUM	
SIZE	LENGTH FEET
4	9'-3"
4	8'-9"
4	8'-3"

A.C.S.R.	
SIZE	DIAM. INCHES
1/0	.398
2	.325
4	.257

TIE WIRE ALUMINUM ALLOY	
SIZE	LENGTH FEET
6	8'-3"
6	7'-5"
6	7'-3"

Clark Public Utilities

CONSTRUCTION STANDARDS

DOUBLE INSULATOR
ALUMINUM ALLOY, ACSR CONDUCTOR,
STRAIGHT OR PREFORMED ARMOR RODS

REVISIONS			
R	DATE	ENGR	OPS

PAGE:		CAD FILE:	APP:	SECTION
1 of 1	TI5	TI5	DATE:	400

410
OVERHEAD SECONDARY

3/14/2023

~	S15, S15A	3-Spool Secondary Rack Assembly
~	S16, S16A	4-Spool Secondary Rack Assembly
~	SE1, SE1A	Service Assemblies - Cable Terminations
~	SE2, SE2A, SE2B	Service Assemblies - Cable Terminations
~	SE3, SE3A	Service Assemblies - Cable Terminations
~	SE6	Typical Heavy Service Detail (>4/0 Al Triplex or Quad)
~	SE7	Typical Service Take-Off - Crossarm Secondaries
~	SE8	Bridal Guy for Two or More Services
~	SE9	Bridal Guy for Single Service

N New Standard
R Redrawn Standard
C Changed Standard
~ No Change

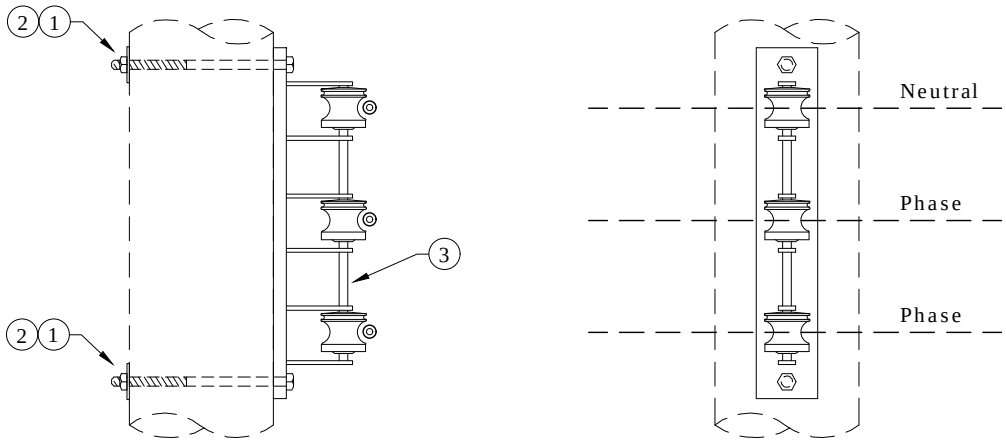

3 SPOOL RACK S15

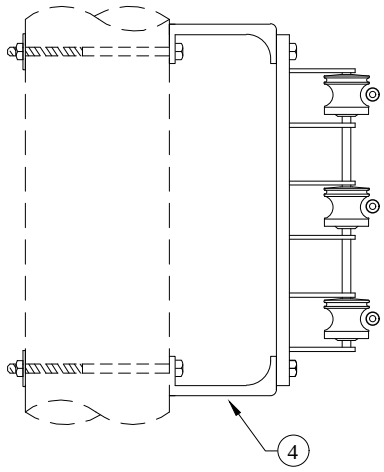

3 SPOOL RACK WITH EXTENSION S15A

ITEM NO.	DESCRIPTION	S15		S15A	
		QTY.	S/N	QTY.	S/N
1	Bolt, Machine 5/8" x 12"	2	155	2	155
2	Washer, Square, Flat, 5/8", 2 1/4" x 2 1/4"	2	1412	2	1412
3	Rack, Secondary 3 Spool	1	1062	1	1062
4	Bracket, Extension, Secondary Rack	-	---	2	N.S.

Clark Public Utilities

CONSTRUCTION STANDARDS

3 SPOOL
SECONDARY RACK ASSEMBLY

REVISIONS

R	DATE	ENGR	OPS
1	3/02		

1 REDRAWN IN CAD

PAGE: 1 of 1

S15, S15A

CAD FILE: S15

APP: ELM
DATE: 1/31/80

SECTION 410

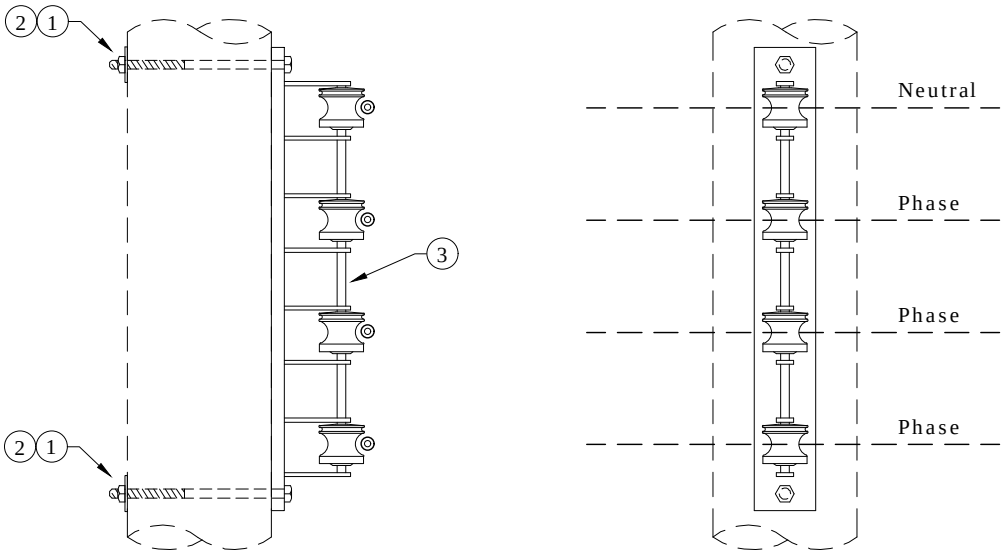

4 SPOOL RACK S16

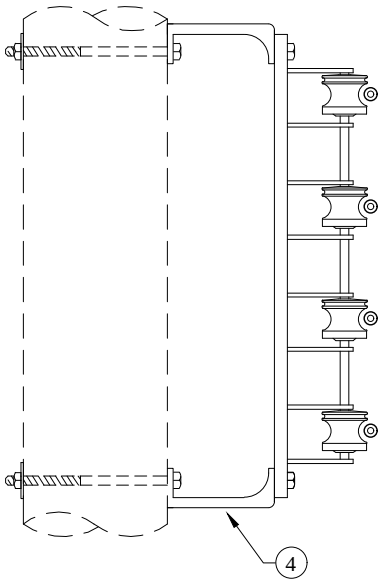

4 SPOOL RACK WITH EXTENSION S16A

ITEM NO.	DESCRIPTION	S16		S16A	
		QTY.	S/N	QTY.	S/N
1	Bolt, Machine 5/8" x 12"	2	155	2	155
2	Washer, Square, Flat, 5/8", 2 1/4" x 2 1/4"	2	1412	2	1412
3	Rack, Secondary 4 Spool	1	1063	1	1063
4	Bracket, Extension, Secondary Rack	-	---	2	N.S.

Clark Public Utilities

CONSTRUCTION STANDARDS

4 SPOOL
SECONDARY RACK ASSEMBLY

REVISIONS

R	DATE	ENGR	OPS
1	3/02		

1 REDRAWN IN CAD

PAGE: 1 of 1

S16, S16A

CAD FILE: S16

APP: ELM
DATE: 1/31/80

SECTION 410

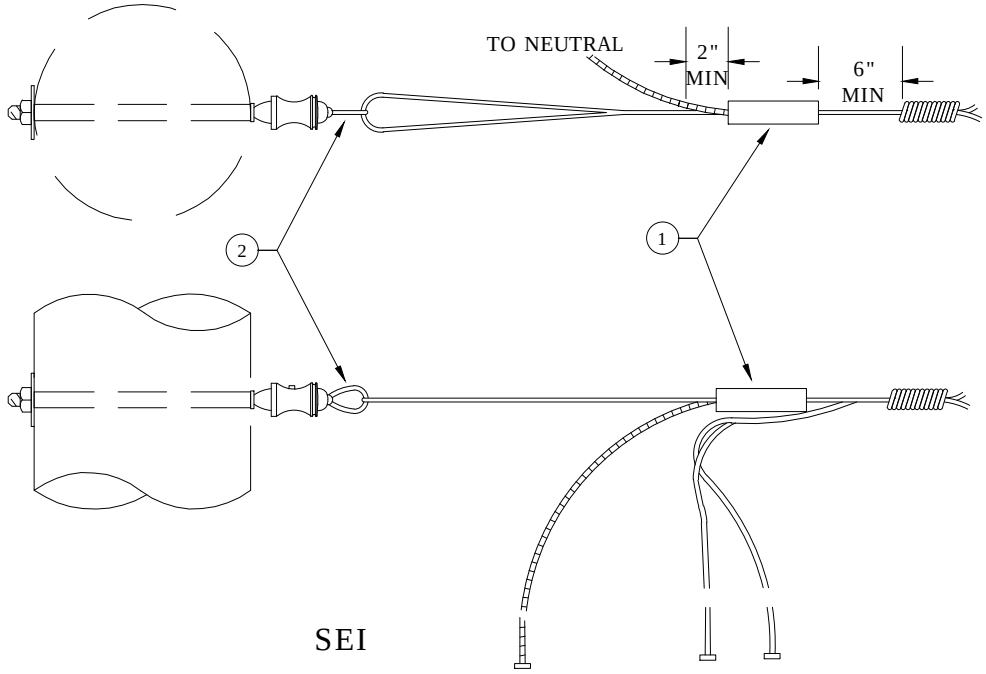

SEI

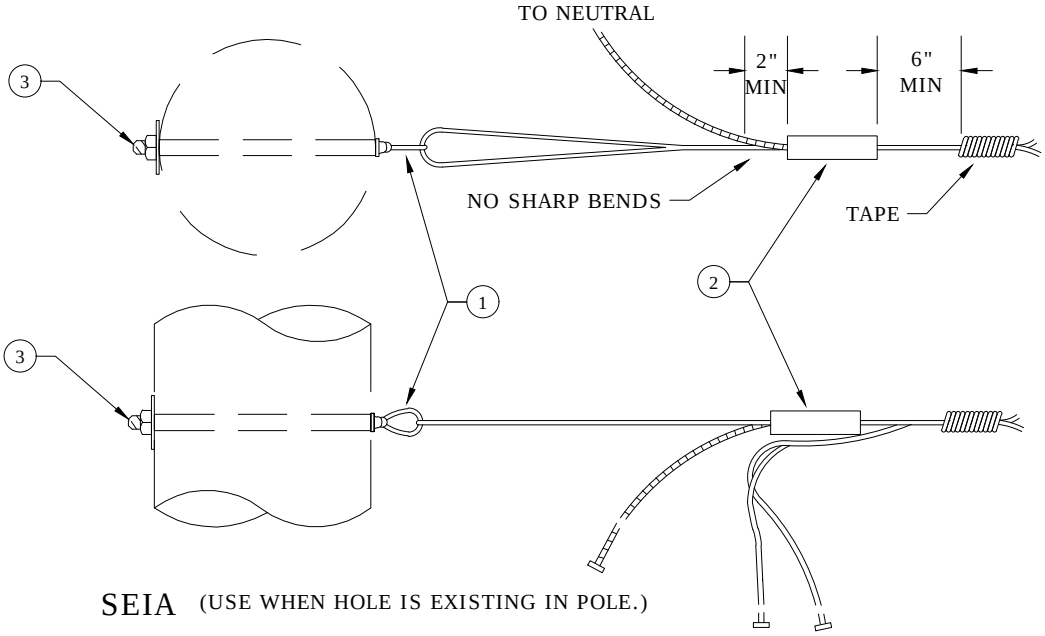

SEIA (USE WHEN HOLE IS EXISTING IN POLE.)

Clark Public Utilities

CONSTRUCTION STANDARDS

SERVICE ASSEMBLIES
CABLE TERMINATIONS

REVISIONS			
R	DATE	ENGR	OPS
0		LB	AH
0			

PAGE:		CAD FILE:	APP:	SECTION
1 of 2	SE1, SE1A	SE1	DATE:	410

*TRUCK STOCK

MATERIAL LIST

ITEM NO.	DESCRIPTION	SE1 QTY.	SE1 S/N
1	CLAMP, WEDGE	1	AS REQ*
2	NUT, EYE OVAL 5/8" GALV.	1	913

ITEM NO.	DESCRIPTION	SE1A QTY.	SE1A S/N
1	BOLT, EYE 5/8" x _____" GALV.	1	AS REQ
2	CLAMP, WEDGE	1	AS REQ*
3	WASHER, SQ. FLAT, 5/8"	2	1412

Clark Public Utilities

CONSTRUCTION STANDARDS

SERVICE ASSEMBLIES
CABLE TERMINATIONS

REVISIONS

R	DATE	ENGR	OPS
0		LB	AH

0

PAGE: 2 of 2

SE1, SE1A

CAD FILE: SE1

APP:

DATE:

SECTION 410

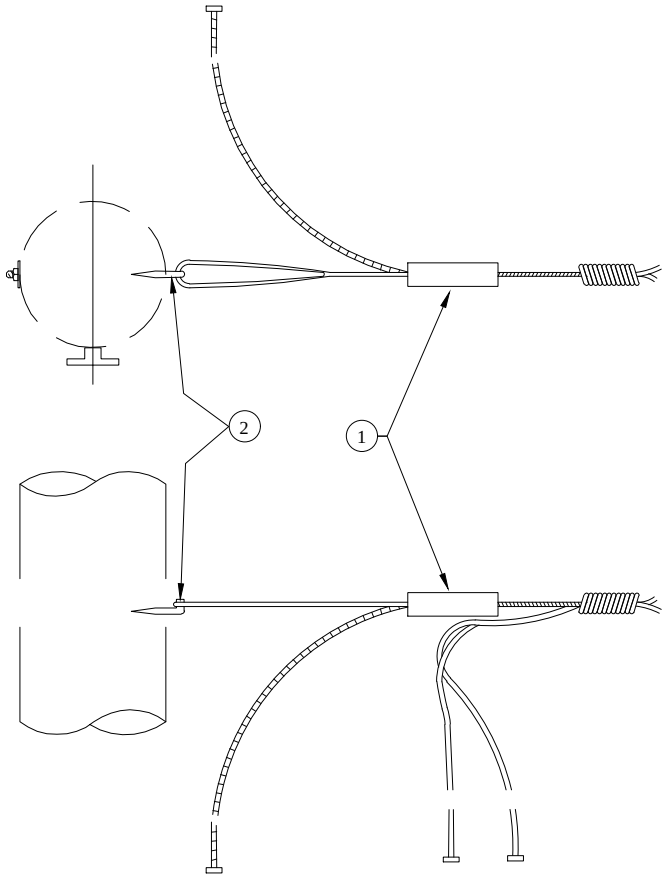

SE2, USE WHEN HOLE IS NOT EXISTING IN POLE

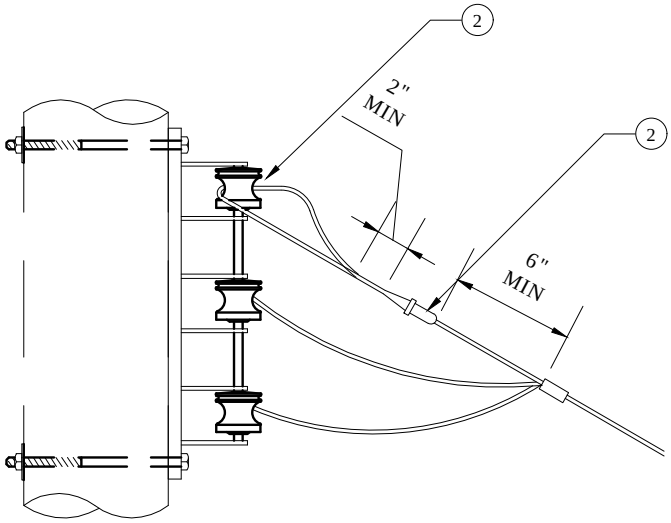

SE2A, TYPICAL SERVICE CONNECTION TO ROCK.

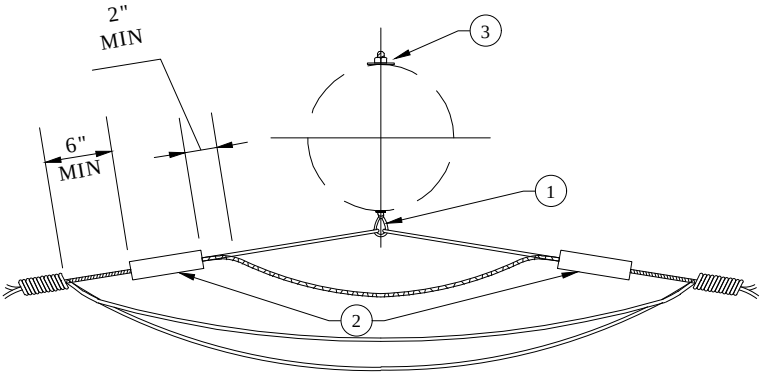

SE2B
TYPICAL GUIDE FOR SWING SERVICE

Clark Public Utilities

CONSTRUCTION STANDARDS

SERVICE ASSEMBLIES
CABLE TERMINATIONS

REVISIONS			
R	DATE	ENGR	OPS
0		LB	AH
0			

PAGE:		CAD FILE:	APP:	SECTION
1 of 2	SE2, SE2A, SE2B	SE2	DATE:	410

* TRUCK STOCK

MATERIAL LIST

ITEM NO.	DESCRIPTION	SE2 QTY.	SE2 S/N
1	CLAMP, WEDGE	1	AS REQ*
2	HOOK, DRIVE SCREW	1	751
	* TRUCK STOCK		

ITEM NO.	DESCRIPTION	SE2A QTY.	SE2A S/N
1	CLAMP, WEDGE	1	AS REQ*
2	CONNECTOR	1	AS REQ*
	* TRUCK STOCK		

ITEM NO.	DESCRIPTION	SE2B QTY.	SE2B S/N
1	BOLT, EYE, 5/8" x ____", GALV.	1	AS REQ*
2	CLAMP, WEDGE	2	AS REQ*
3	WASHER, SQ. FLAT, 5/8"	2	1412

Clark Public Utilities

CONSTRUCTION STANDARDS

SERVICE ASSEMBLIES
CABLE TERMINATIONS

REVISIONS			
R	DATE	ENGR	OPS
0		LB	AH
0			

PAGE: 2 of 2

SE2, SE2A, SE2B

CAD FILE: SE2

APP:

DATE:

SECTION 410

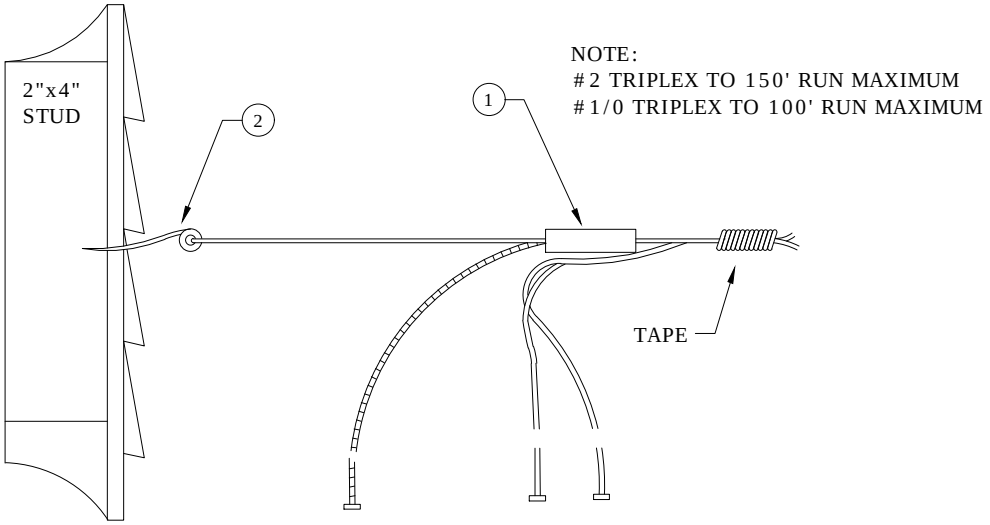

SE3

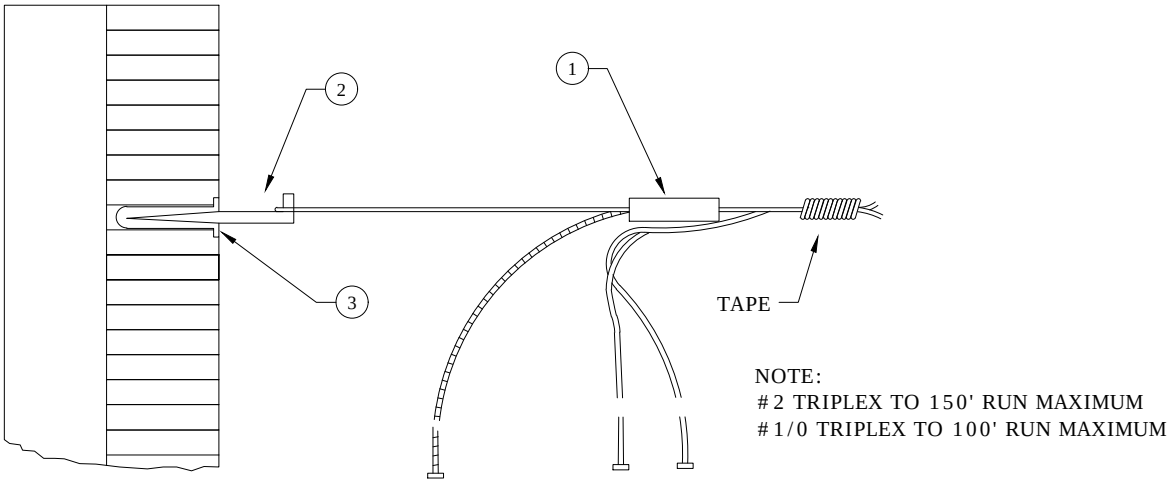

SE3A

*TRUCK STOCK
N.S. NOT STOCKED

MATERIAL LIST

ITEM NO.	DESCRIPTION	SE3 QTY.	SE3 S/N
1	CLAMP, WEDGE	1	AS REQ*
2	INSULATOR HOUSE KNOB 1984	1	763

ITEM NO.	DESCRIPTION	SE3A QTY.	SE3A S/N
1	CLAMP, WEDGE	1	AS REQ
2	HOOK, DRIVE SCREW	1	751
3	SHIELD EXPANSION	1	N.S.

Clark Public Utilities

CONSTRUCTION STANDARDS

SERVICE ASSEMBLIES
CABLE TERMINATIONS

REVISIONS

R	DATE	ENGR	OPS
0		LB	AH

PAGE: 1 of 1

SE3, SE3A

CAD FILE: SE3

APP:

DATE:

SECTION 410

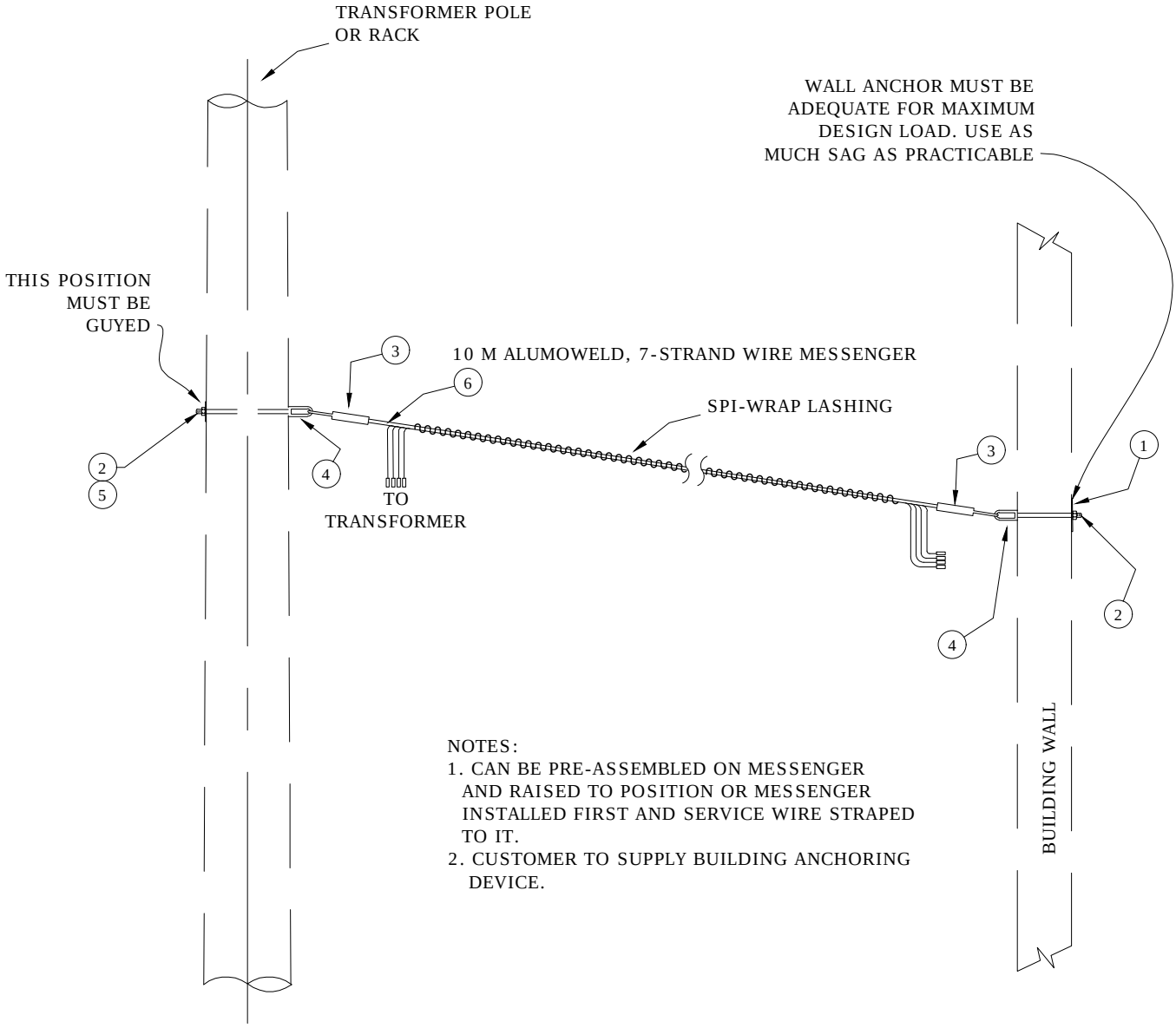

NOTES:
1. CAN BE PRE-ASSEMBLED ON MESSENGER AND RAISED TO POSITION OR MESSENGER INSTALLED FIRST AND SERVICE WIRE STRAPED TO IT.
2. CUSTOMER TO SUPPLY BUILDING ANCHORING DEVICE.

MATERIAL LIST

ITEM NO.	DESCRIPTION	SE6 QTY.	SE6 S/N
1	ANCHOR, WALL (BY CUSTOMER)	1	
2	BOLT, MACHINE 5/8" x ____" GALV	2	AS REQ
3	GRIP, GUY 10M	2	713
4	NUT, EYE OVAL 5/8" GALV	2	913
5	WASHER, SQ FLAT 5/8"	3	1412
6	WIRE, GUY, 10M	AS REQ	1419**
	** TO BE CALLED OUT BY ENGINEER		

Clark Public Utilities

CONSTRUCTION STANDARDS

TYPICAL HEAVY SERVICE DETAIL
LARGER THAN NO. 4/0 ALUM. TRIPLEX
OR QUAD

REVISIONS

R	DATE	ENGR	OPS
0		LB	AH

PAGE: 1 of 1

SE6

CAD FILE: SE6

APP:

DATE:

SECTION 410

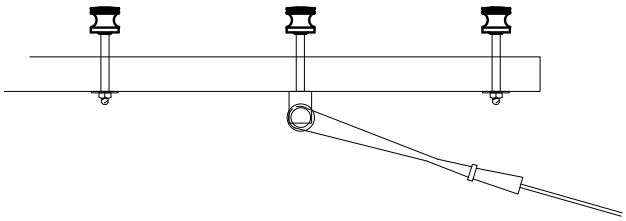

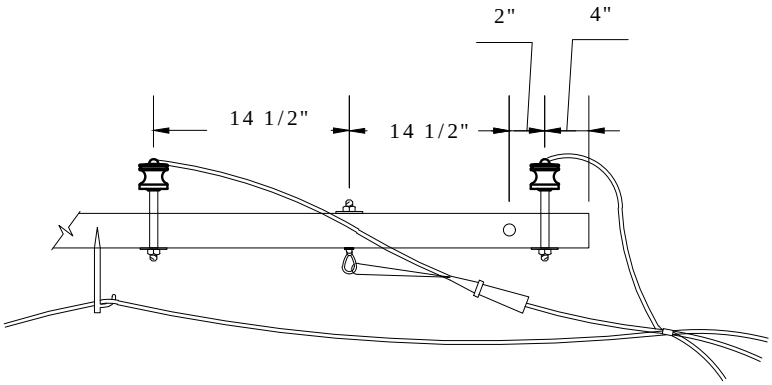

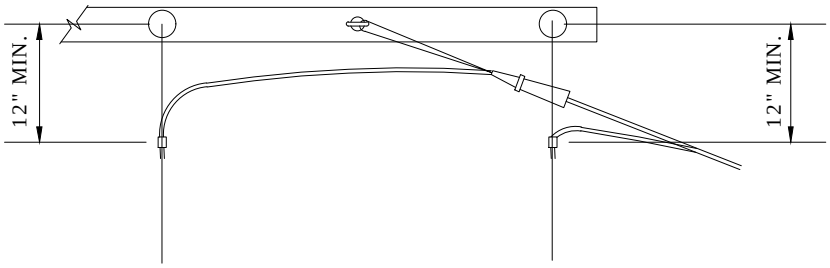

Clark Public Utilities

CONSTRUCTION STANDARDS

TYPICAL SERVICE TAKE-OFF
CROSSARM SECONDARIES

REVISIONS

R	DATE	ENGR	OPS
0		LB	AH

0

PAGE:		CAD FILE:	APP:	SECTION
1 of 1	SE7	SE7	DATE:	410

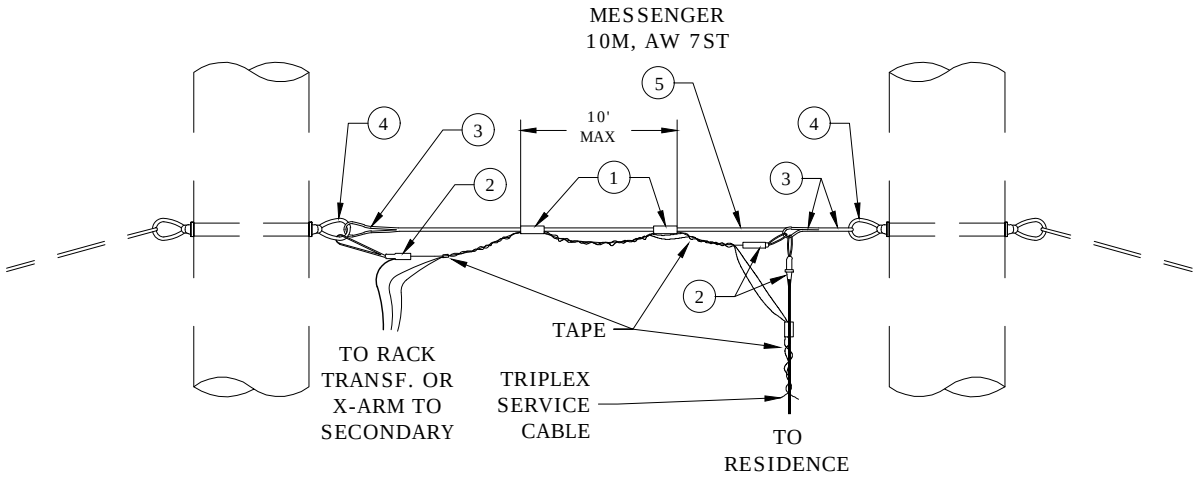

NOTE:
1. LOCATION OF BRIDAL ON POLE TO BE DETERMINED BY LOCAL CONDITIONS.
2. INSTALL ONLY ONE CABLE FROM POLE TO GUY GRIP.
3. CLIP TO MESSENGER AS REQUIRED.
4. INSTALL HEAD GUYS BOTH WAYS.

*TRUCK STOCK
**TO BE CALLED OUT BY ENGINEER

MATERIAL LIST

ITEM NO.	DESCRIPTION	SE8 QTY.	SE8 S/N
1	CLAMP	5	AS REQ*
2	CLAMP, WEDGE	3	AS REQ*
3	GRIP, GUY 10M	3	713
4	NUT, EYE OVAL 5/8" GALV.	2	913
3	WIRE, GUY, 10M	AS REQ	1419**

Clark Public Utilities

CONSTRUCTION STANDARDS

BRIDLE GUY
FOR TWO OR MORE SERVICES

REVISIONS

R	DATE	ENGR	OPS
0		LB	AH

0

PAGE: 1 of 1

SE8

CAD FILE: SE8

APP:

DATE:

SECTION 410

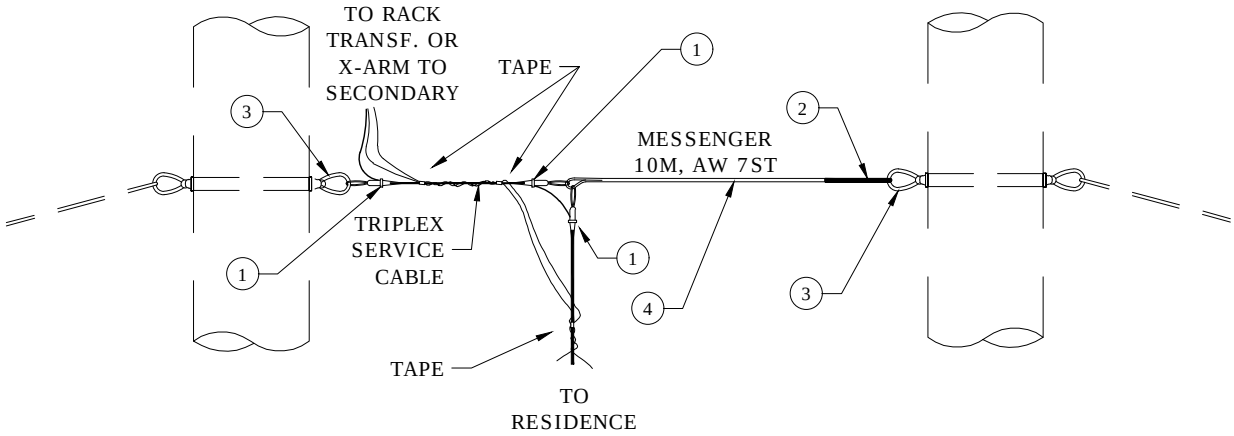

NOTE:
1. LOCATION OF BRIDAL ON POLE TO BE DETERMINED BY LOCAL CONDITIONS.
2. INSTALL HEAD GUYS BOTH WAYS.

*TRUCK STOCK
**TO BE CALLED OUT BY ENGINEER

MATERIAL LIST

ITEM NO.	DESCRIPTION	SE9	
		QTY.	S/N
1	CLAMP, WEDGE	3	AS REQ*
2	GRIP, GUY 10M	2	713
3	NUT, EYE OVAL 5/8" GALV.	2	913
4	WIRE, GUY, 10M	AS REQ	1419**

Clark Public Utilities

CONSTRUCTION STANDARDS

BRIDLE GUY
FOR SINGLE SERVICE

REVISIONS

R	DATE	ENGR	OPS
0		LB	AH

0

PAGE: 1 of 1

SE9

CAD FILE: SE9

APP:

DATE:

SECTION 410

500
CROSSARMS AND POLES

2/11/2025

~	CR1	8' Standard Crossarm Drilling Guide
N	FCR1	8’ Fiberglass Standard Crossarm Drilling Guide
~	CR2	10' Standard Crossarm Drilling Guide
N	FCR2	10’ Fiberglass Standard Crossarm Drilling Guide
~	CR3	12' Standard Crossarm Drilling Guide
~	CR4	5' Standard Crossarm Drilling Guide
~	DEA1	8' Pre-assembled Deadend Assembly 3-position Drilling Guide
~	DEA2	10' Pre-assembled Deadend Assembly 3-position Drilling Guide
~	DEA3	10' Pre-assembled Deadend Assembly 4-position Drilling Guide
~	P1	25' to 35' Distribution Pole Framing Guide
~	P2	40' to 60' Distribution Pole Framing Guide
~	P3	Pole Setting Depth Guide
C	P4	Transmission-Distribution Pole Thru Boring at Ground Line
~	TP2	115kV Transmission Line General Pole Drilling Specification
~	TPW	Transmission Wood Pole Weights

N New Standard
R Redrawn Standard
C Changed Standard
~ No Change

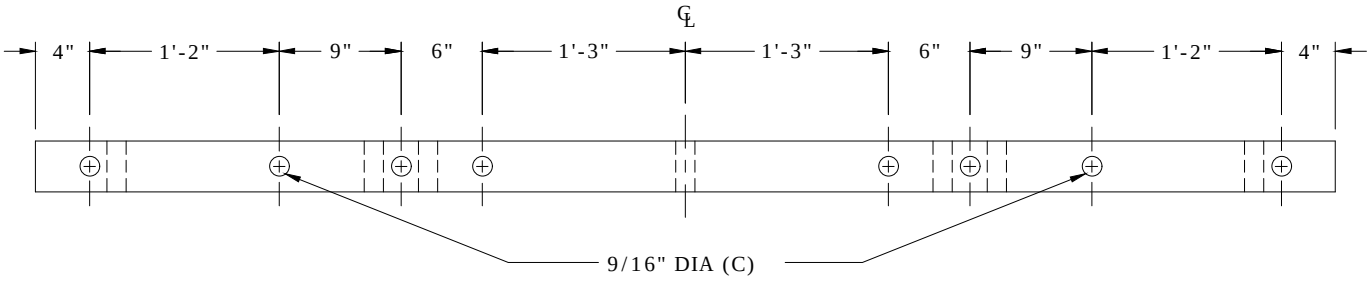

TOP VIEW

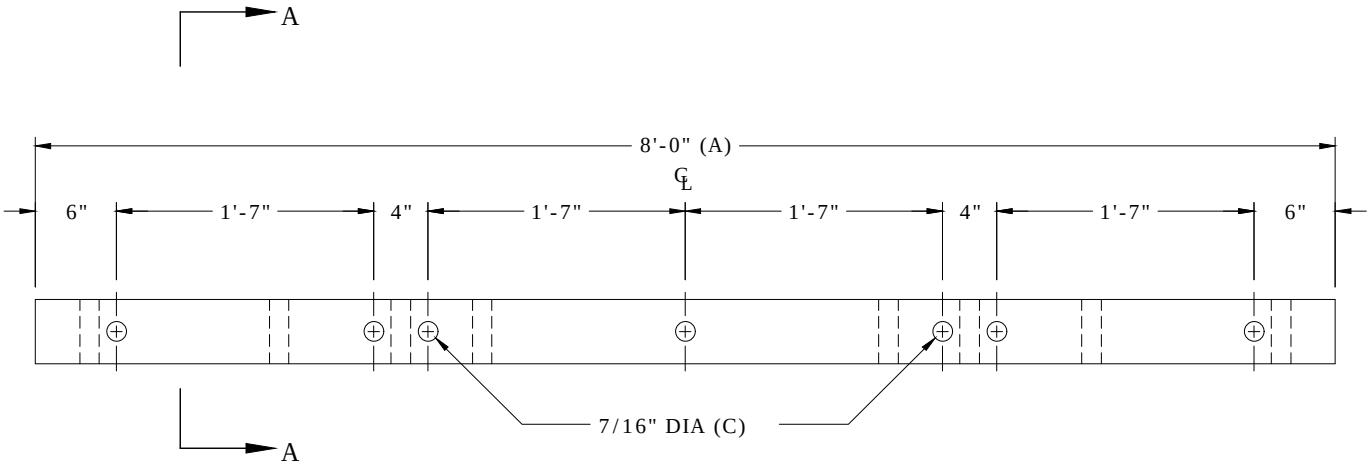

FRONT VIEW

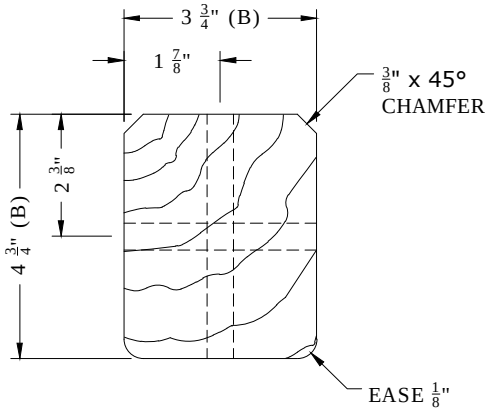

SECTION A-A

TOLERANCES

	OVER	UNDER
(A)	1/4"	1/4"
(B)	1/8"	1/8"
(C)	1/32"	1/32"

NOTES

1. HOLES TO BE 11/16" DIA.(c) UNLESS OTHERWISE INDICATED.

Clark Public Utilities

CONSTRUCTION STANDARDS

8' STANDARD CROSSARM
DRILLING GUIDE

REVISIONS

R	DATE	ENGR	OPS
1	2/8/93		

PAGE: 1 of 1

CR1

CAD FILE: CR1

APP: HWH

DATE: 1/22/80

SECTION 500

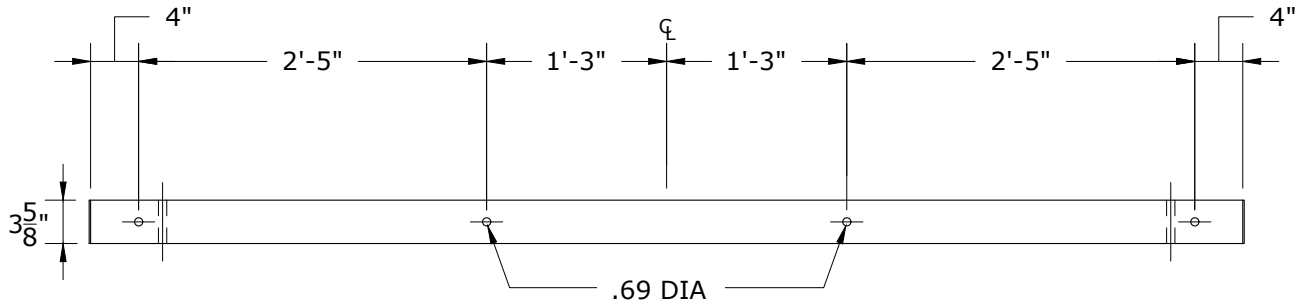

TOP VIEW

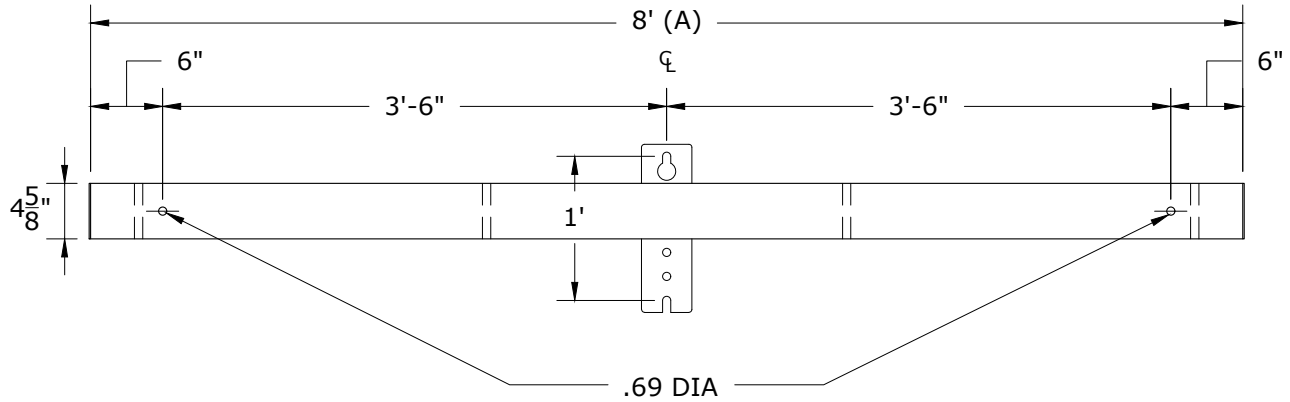

FRONT VIEW

NOTES

1. HOLES TO BE 11/16" DIA. UNLESS OTHERWISE INDICATED.

Rev. 0 -New Standard

Clark Public Utilities

CONSTRUCTION STANDARDS

8' FIBERGLASS STANDARD CROSSARM DRILLING GUIDE

REVISIONS			
R	DATE	ENGR	OPS
0	2/11/25	CM	GM

PAGE: 1 of 1

FCR1

CAD FILE: FCR1

APP: CB

DATE: 11/4/24

SECTION 500

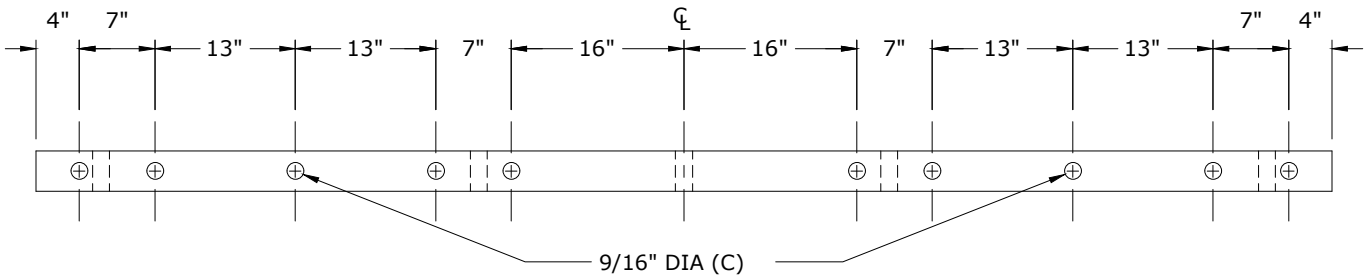

TOP VIEW

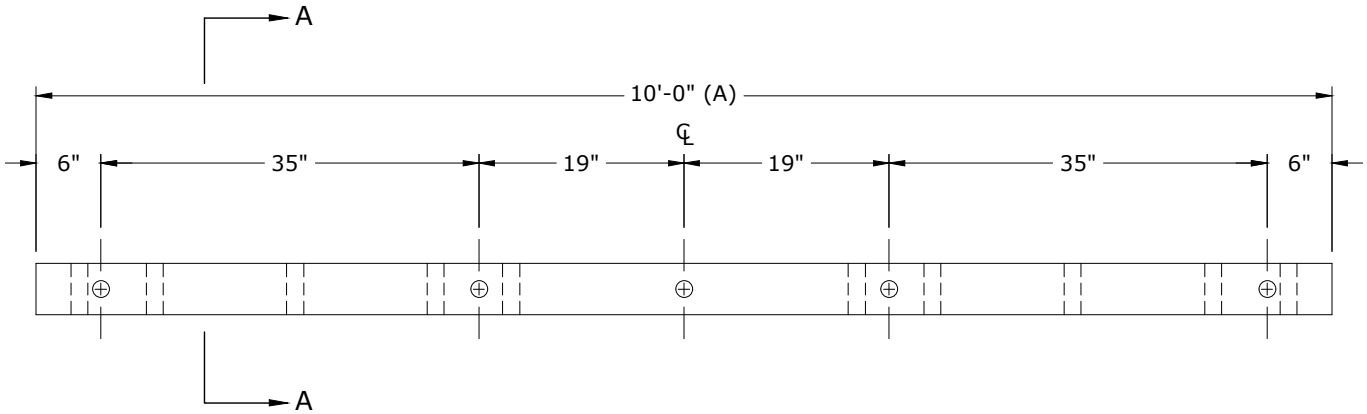

FRONT VIEW

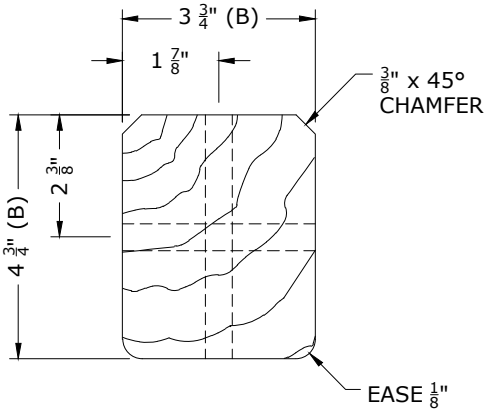

SECTION A-A

TOLERANCES

	OVER	UNDER
(A)	1/4"	1/4"
(B)	1/8"	1/8"
(C)	1/32"	1/32"

Note:

Holes to be 11/16" DIA unless otherwise indicated.

Rev. 2 - Corrected dimension from end of crossarm to first side drilling, 8" to 6".

Clark Public Utilities

CONSTRUCTION STANDARDS

10' STANDARD CROSSARM
DRILLING GUIDE

REVISIONS

R	DATE	ENGR	OPS
1	2/8/93		
2	9/2/20	JDK	

PAGE: 1 of 1

CR2

CAD FILE: CR2

APP: HWH

DATE: 1/22/80

SECTION 500

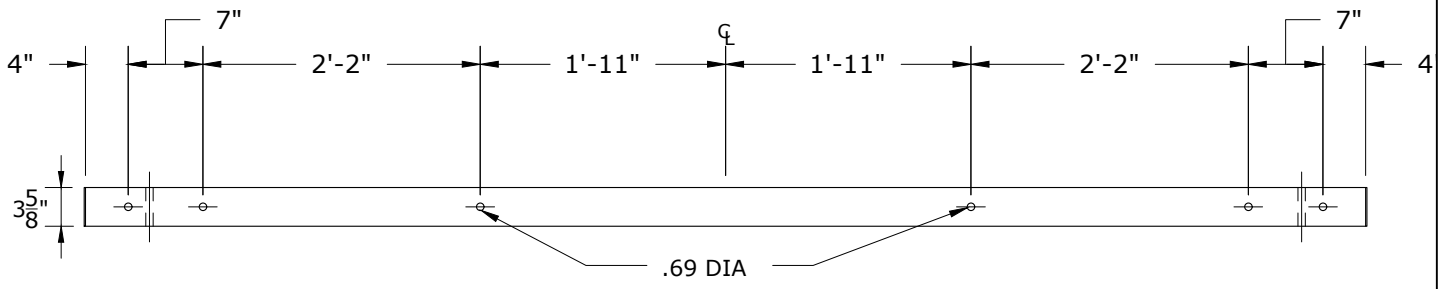

TOP VIEW

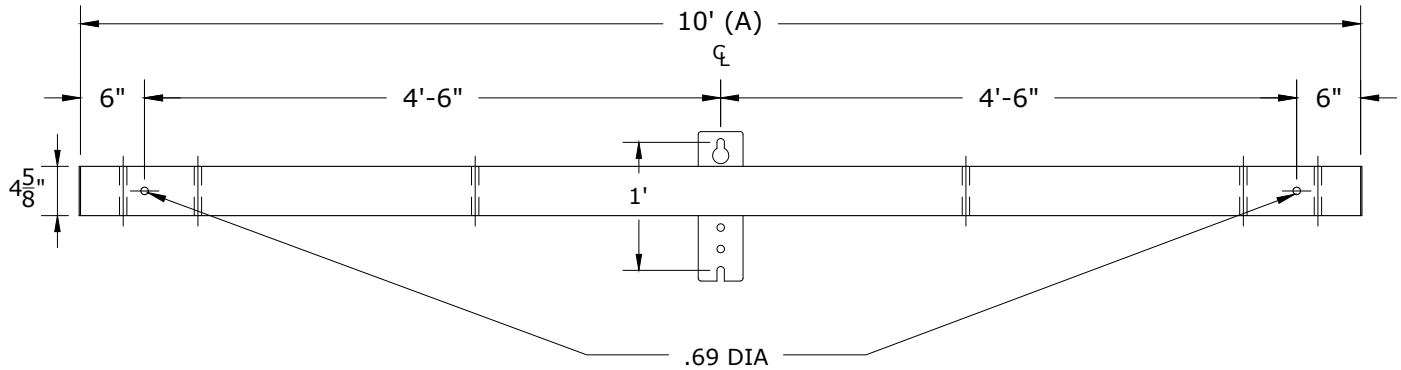

FRONT VIEW

NOTES

1. HOLES TO BE 11/16" DIA. UNLESS OTHERWISE INDICATED.

Rev. 0 - New Standard

Clark Public Utilities

CONSTRUCTION STANDARDS

10' FIBERGLASS STANDARD CROSSARM DRILLING GUIDE

REVISIONS			
R	DATE	ENGR	OPS
0	2/11/25	CM	GM

PAGE:		CAD FILE:	APP: CB	SECTION
1 of 1	FCR2	FCR2	DATE: 11/4/24	500

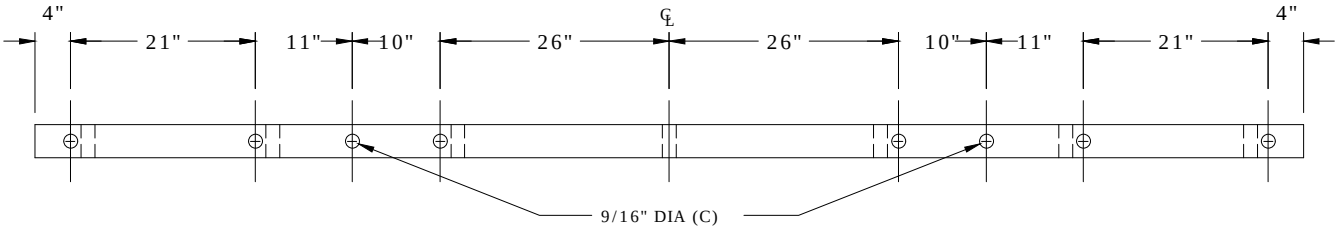

TOP VIEW

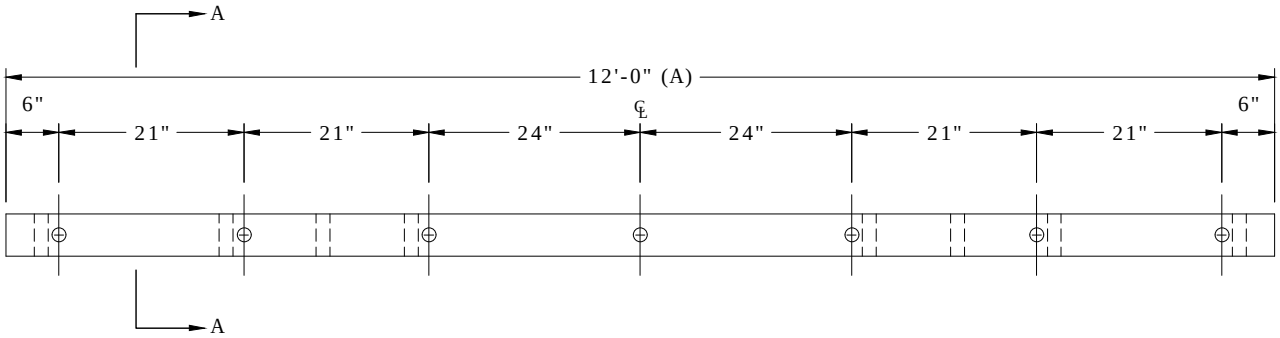

SIDE VIEW

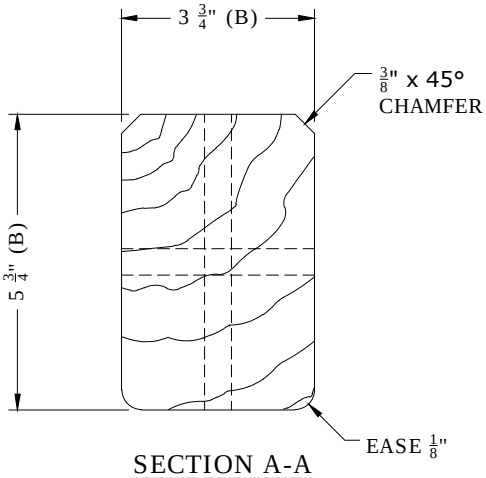

SECTION A-A

TOLERANCES

	OVER	UNDER
(A)	1/4"	1/4"
(B)	1/8"	1/8"
(C)	1/32"	1/32"

NOTES

1. HOLES TO BE 11/16" DIA.(c) UNLESS OTHERWISE INDICATED.

Clark Public Utilities

CONSTRUCTION STANDARDS

12' STANDARD CROSSARM
DRILLING GUIDE

REVISIONS

R	DATE	ENGR	OPS
1	2/8/93		

PAGE: 1 of 1

CR3

CAD FILE: CR3

APP: HWH

DATE: 1/22/80

SECTION 500

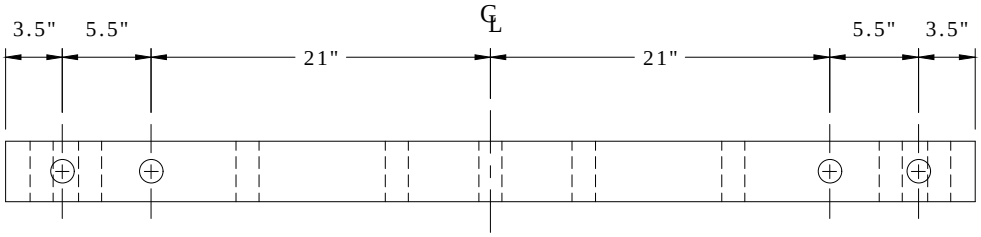

TOP VIEW

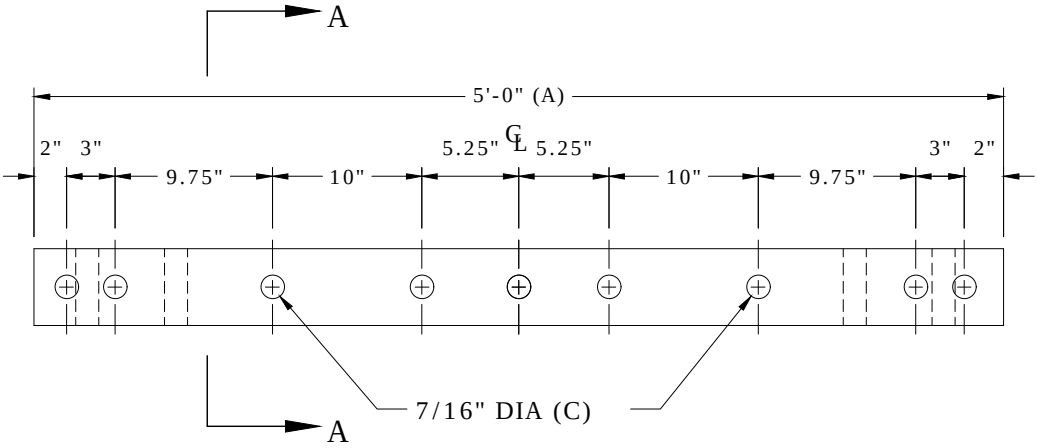

FRONT VIEW

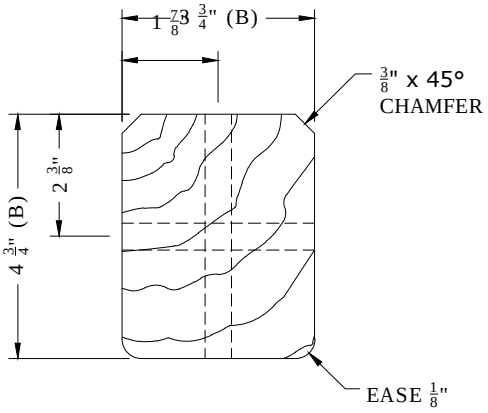

SECTION A-A

TOLERANCES

	OVER	UNDER
(A)	1/4"	1/4"
(B)	1/8"	1/8"
(C)	1/32"	1/32"

NOTES

1. HOLES TO BE 11/16" DIA.(c) UNLESS OTHERWISE INDICATED.

Clark Public Utilities

CONSTRUCTION STANDARDS

5' STANDARD CROSSARM
DRILLING GUIDE

REVISIONS

R	DATE	ENGR	OPS
0	4/02		

0 REDRAWN IN CAD

PAGE:	CAD FILE:	APP: ELM	SECTION
1 of 1	CR4	DATE: 1/31/80	500

CR4

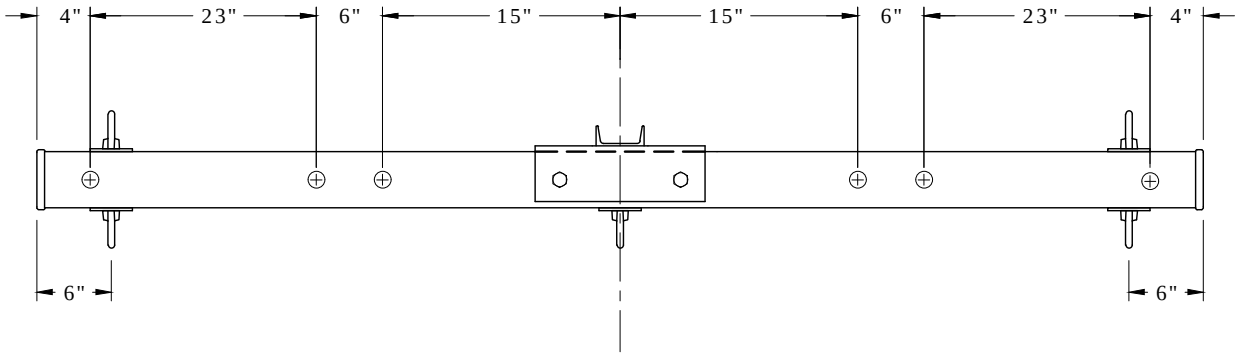

TOP VIEW

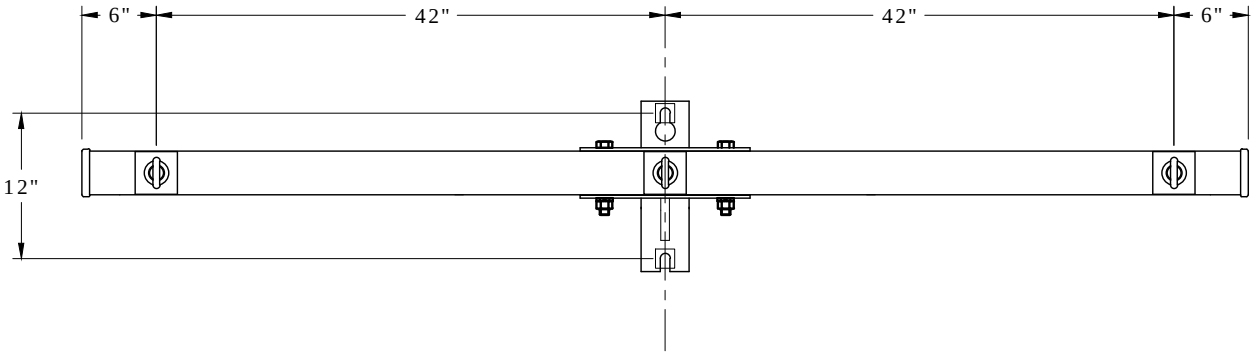

FRONT VIEW

Notes: 1.) Holes to be 11/16" diameter.
2.) Double guy attachment required.

Clark Public Utilities

CONSTRUCTION STANDARDS

8' PRE-ASSEMBLED DEADEND ASSEMBLY
3-POSITION
DRILLING GUIDE

REVISIONS			
R	DATE	ENGR	OPS

PAGE:		CAD FILE:	APP: LB/AH	SECTION
1 of 1	DEA1	DEA1	DATE: 3/5/08	500

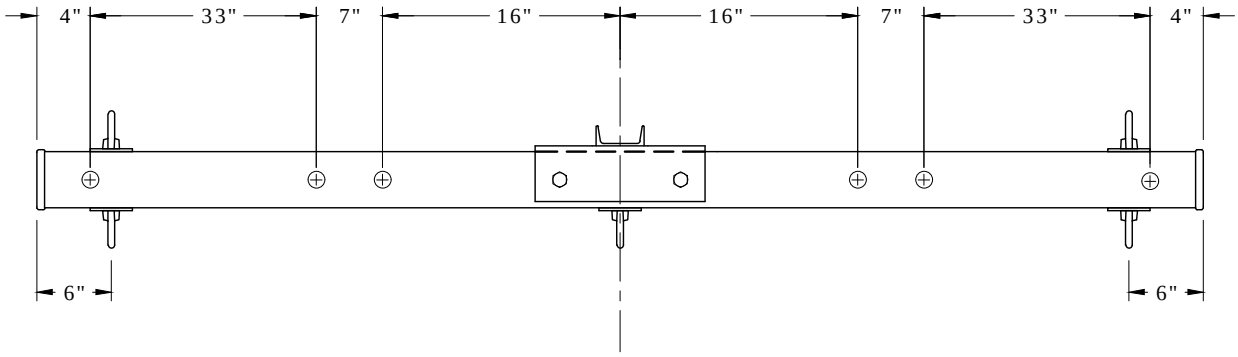

TOP VIEW

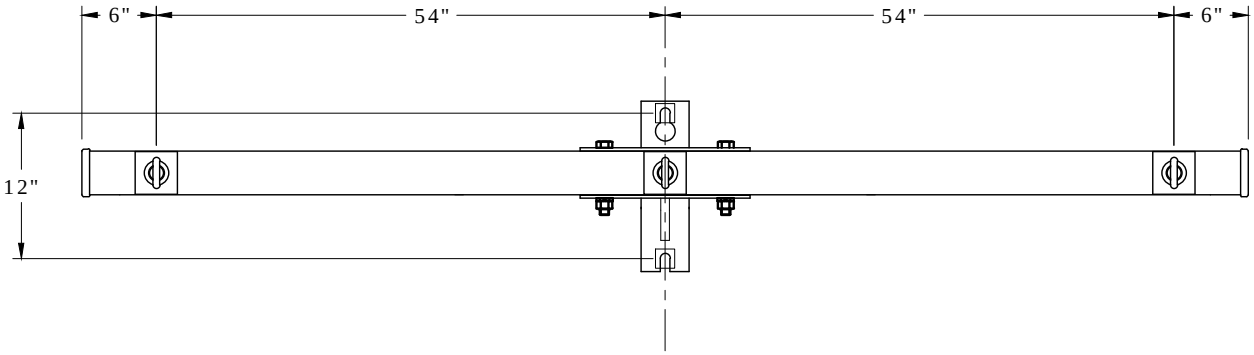

FRONT VIEW

Notes: 1.) Holes to be 11/16" diameter.
2.) Double guy attachment required.

Clark Public Utilities

CONSTRUCTION STANDARDS

10' PRE-ASSEMBLED DEADEND ASSEMBLY
3-POSITION
DRILLING GUIDE

REVISIONS			
R	DATE	ENGR	OPS

PAGE:		CAD FILE:	APP: LB/AH	SECTION
1 of 1	DEA2	DEA2	DATE: 3/5/08	500

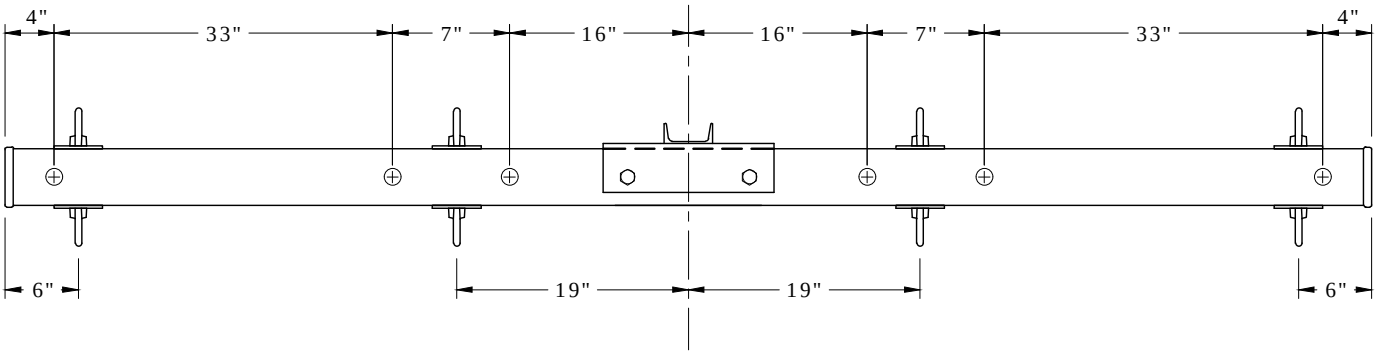

TOP VIEW

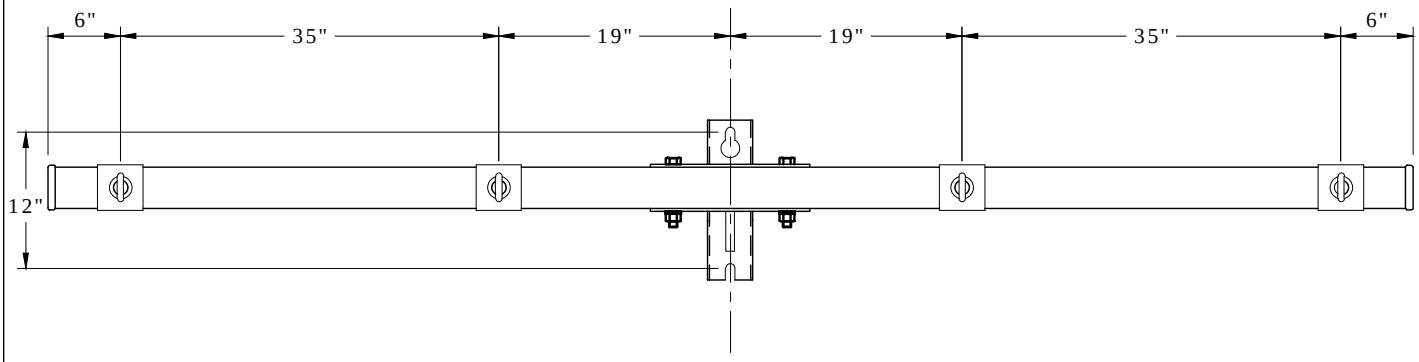

FRONT VIEW

Notes: 1.) Holes to be 11/16" diameter.
2.) Double guy attachment required.

Clark Public Utilities

CONSTRUCTION STANDARDS

10' PRE-ASSEMBLED DEADEND ASSEMBLY
4-POSITION
DRILLING GUIDE

REVISIONS			
R	DATE	ENGR	OPS

PAGE:		CAD FILE:	APP: LB/AH	SECTION
1 of 1	DEA3	DEA3	DATE: 3/5/08	500

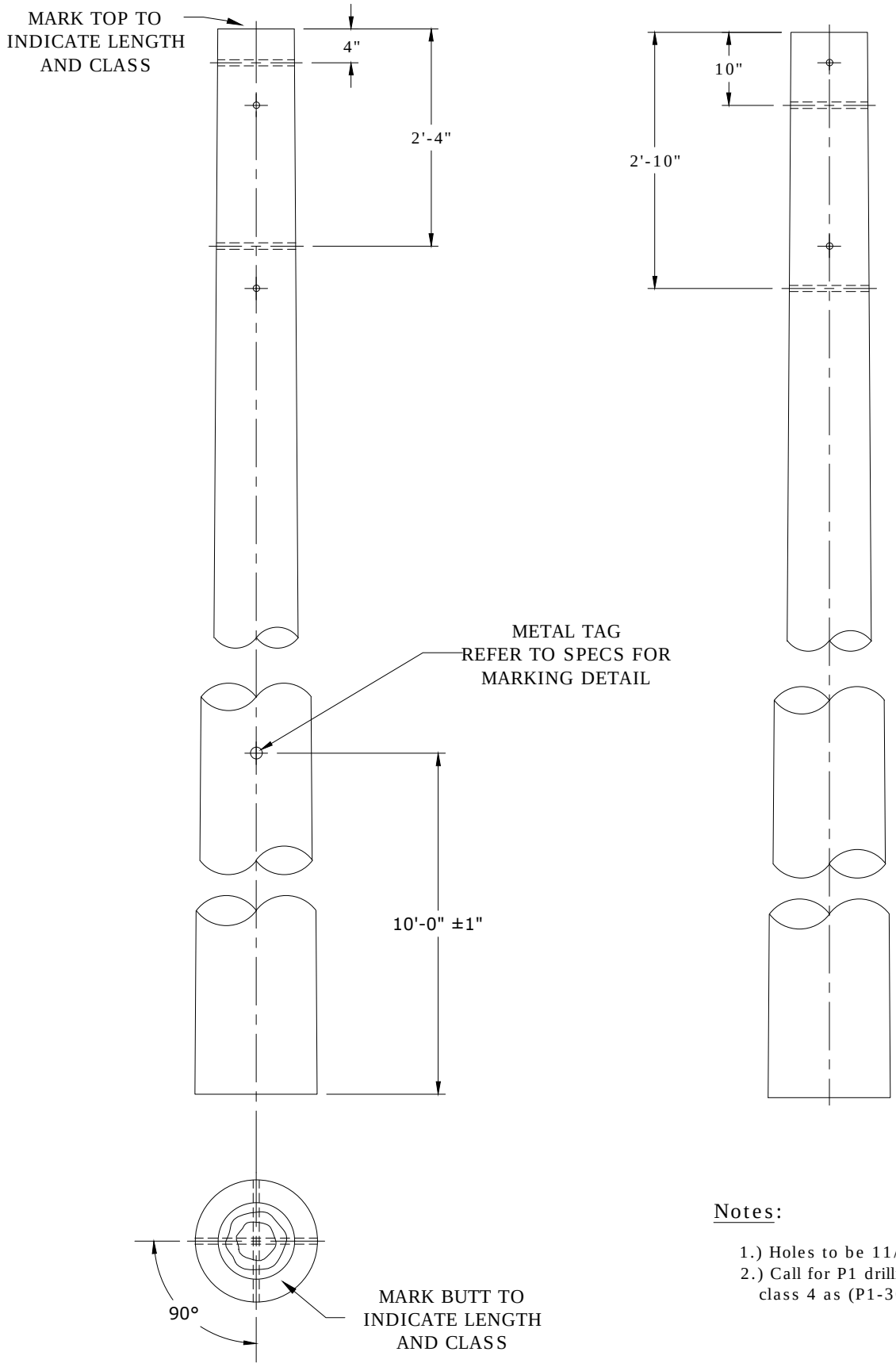

Notes:

1.) Holes to be 11/16" dia.
2.) Call for P1 drilling, 30' pole class 4 as (P1-30-4)

Rev 2: Added length and class tag at top of pole.

Clark Public Utilities

CONSTRUCTION STANDARDS

25' TO 35' DISTRIBUTION POLE
FRAMING GUIDE

REVISIONS

R	DATE	ENGR	OPS
1	10/17/08	CM	AH
2	12/31/09	KJP	

PAGE: 1 of 1

P1

CAD FILE: P1

APP:

DATE: 1/31/80

SECTION 500

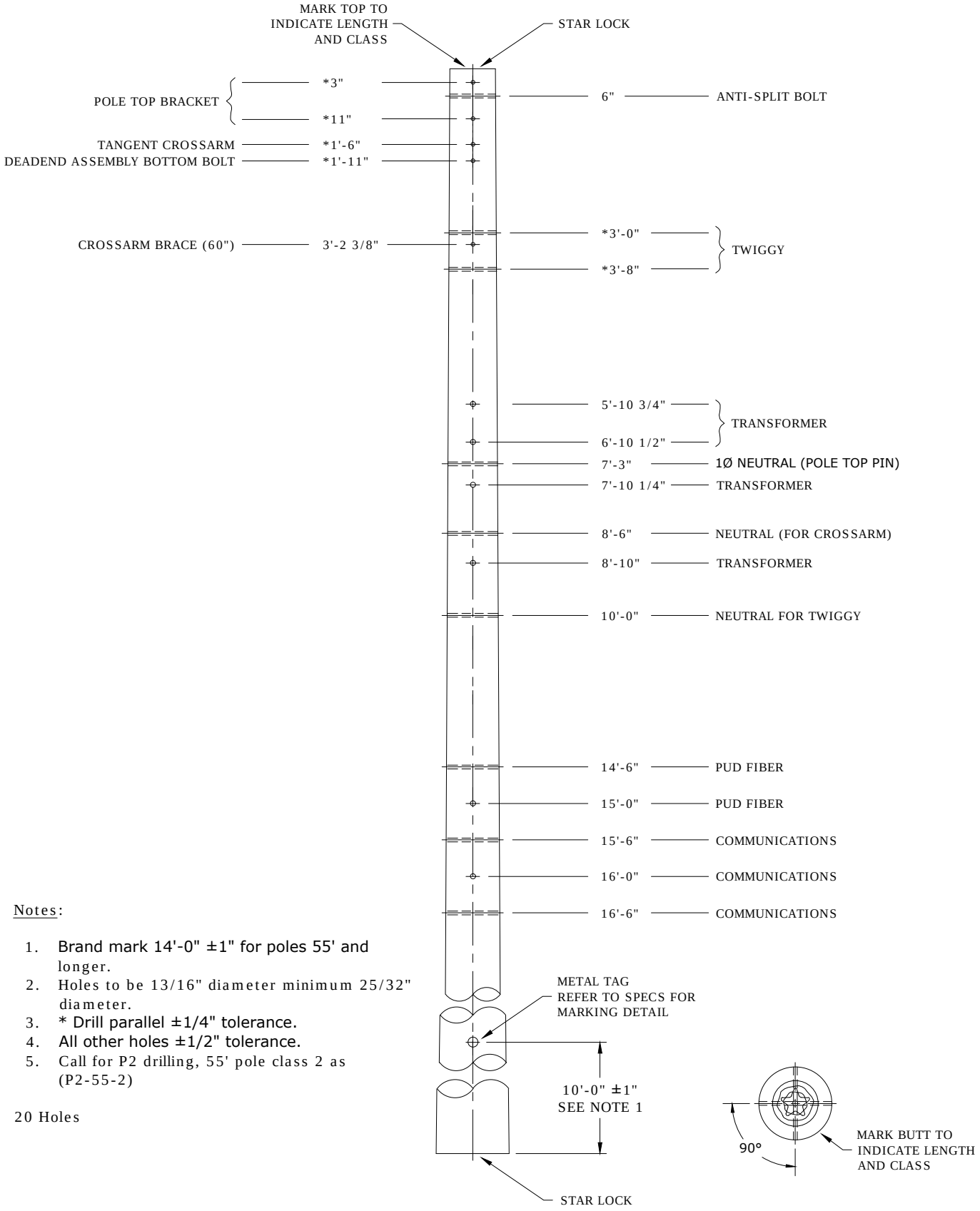

Notes:

1. Brand mark 14'-0" ±1" for poles 55' and longer.
2. Holes to be 13/16" diameter minimum 25/32" diameter.
3. * Drill parallel ±1/4" tolerance.
4. All other holes ±1/2" tolerance.
5. Call for P2 drilling, 55' pole class 2 as (P2-55-2)

20 Holes

Rev. 6 - Added star lock on butt.

Clark Public Utilities

CONSTRUCTION STANDARDS

40' TO 60' DISTRIBUTION POLE FRAMING GUIDE

REVISIONS

R	DATE	ENGR	OPS
3	10/17/08	CM	AH
4	12/31/08	KJP	AH
5	12/15/16	KJP	
6	10/3/17	KJP	

5

PAGE:	CAD FILE:	APP: HWH	SECTION
1 of 1	P2	DATE: 1/22/80	500

P2

POLE DEPTH SETTING CHART

THE MINIMUM DEPTH FOR SETTING POLES SHALL BE AS FOLLOWS:

LENGHT OF POLE (FT)	MINIMUM SETTING DEPTH
UP TO 30'	5'-0"
35'-0"	5'-6"
40'-0"	6'-0"
45'-0"	6'-6"
50'-0"	7'-0"
55'-0"	7'-6"
60'-0"	8'-0"
65'-0"	8'-6"
70'-0"	9'-0"
75'-0"	9'-6"
80' AND ABOVE	10'-0"

Notes: 1. Setting depth in rock or swamp will be determined as required.

Rev 1: Redrawn in CAD

Clark Public Utilities

CONSTRUCTION STANDARDS

POLE SETTING GUIDE

REVISIONS

R	DATE	ENGR	OPS
1	10/17/08	CM	AH

PAGE: 1 of 1

P3

CAD FILE: P3

APP: ELM

DATE: 1/31/80

SECTION 500

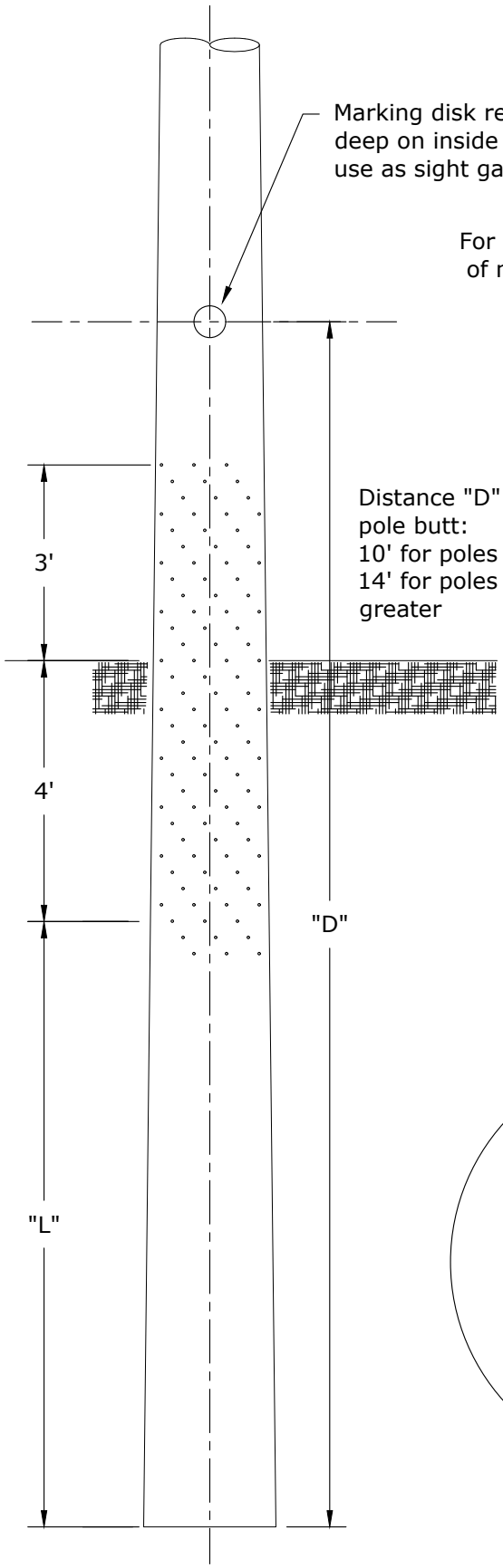

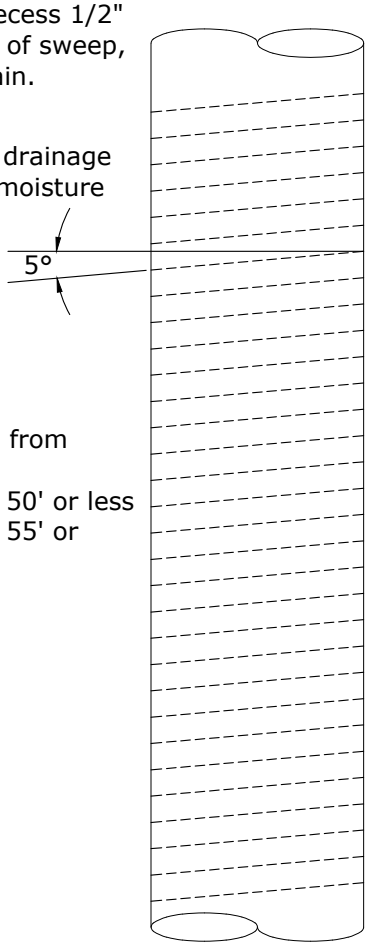

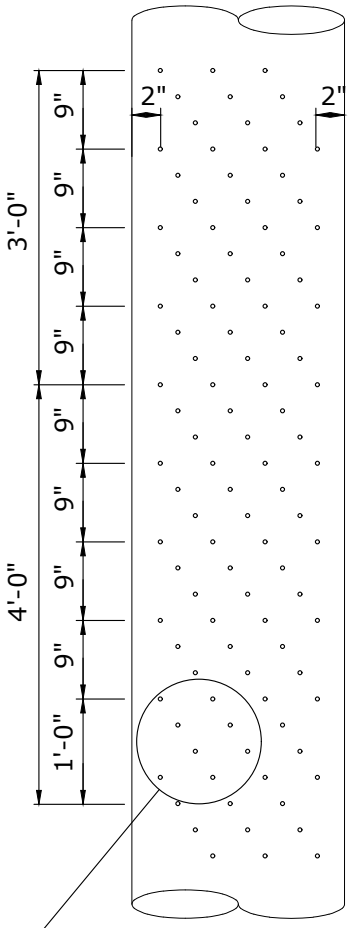

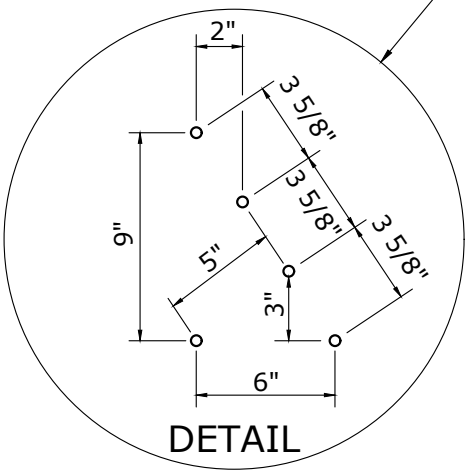

Notes:

1. All holes and marking disk to be made before treatment.
2. All holes shall be completely drilled through the pole in the line direction.
3. Maintain 2 inch minimum edge distance.
4. All holes shall be $\frac{1}{2}$ inch maximum diameter.

POLE SIZE	"L"	POLE SIZE	"L"
40'	2'	70'	5'
45'	2'-6"	75'	5'-6"
50'	3'	80'	6'
55'	3'-6"	85'	6'-6"
60'	4'	90'	7'
65'	4'-6"	>90'	7'

Rev. 3 - Added more dimensions for pole drilling clarity.

Clark Public Utilities

CONSTRUCTION STANDARDS

TRANSMISSION-DISTRIBUTION POLE
THROUGH BORING GUIDE
AT GROUND LINE

REVISIONS

R	DATE	ENGR	OPS
1	2/11/10	KJP	
2	12/21/18	JDK	
3	2/11/25	CM	GM

PAGE: 1 of 1

P4

CAD FILE: P4

APP:

DATE:

SECTION 500

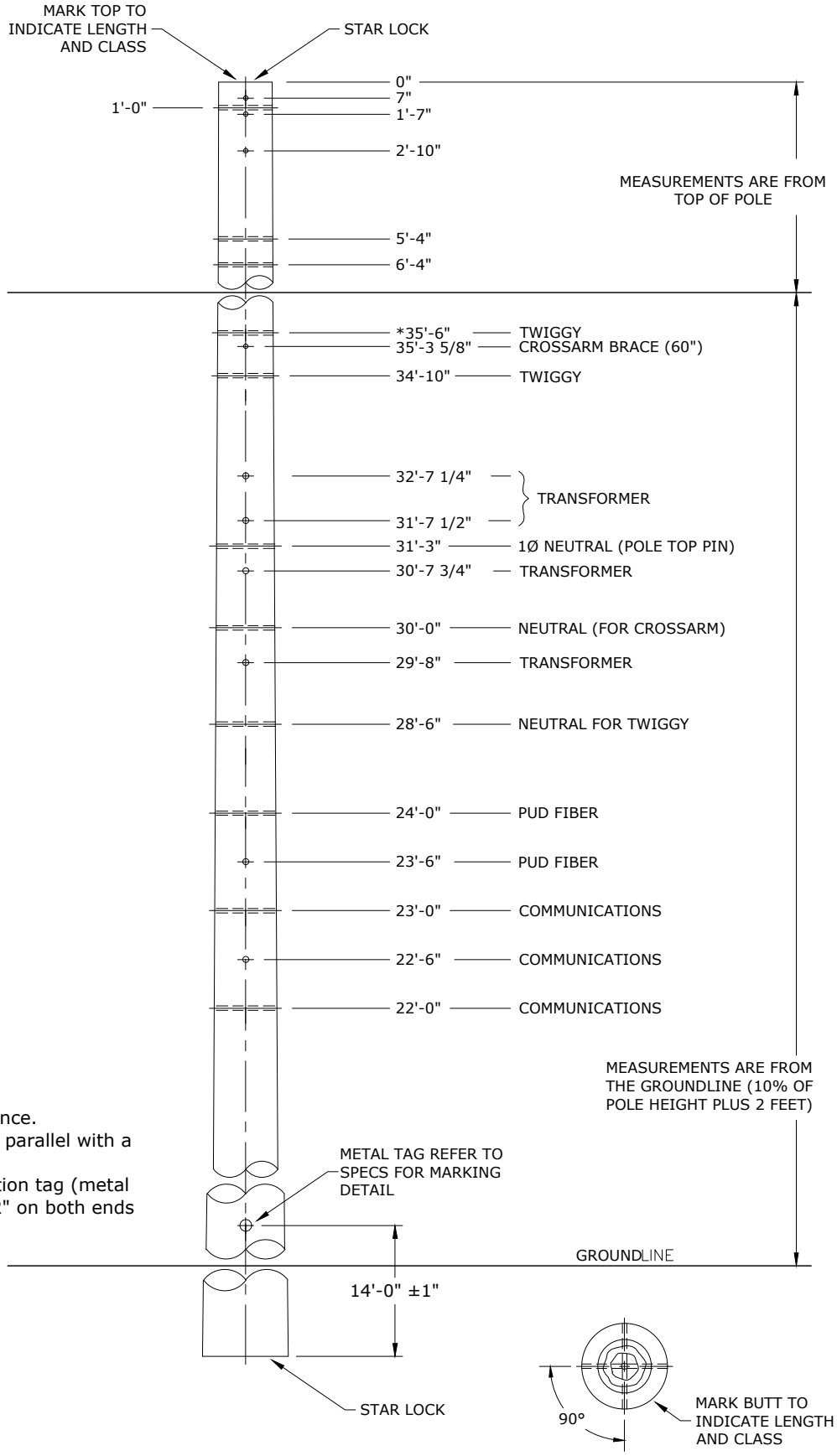

Notes:

1. All holes are ±1/16" tolerance.
2. * All parallel holes shall be parallel with a tolerance of ±1/4".
3. Install processor identification tag (metal tag) with drilling spec "TP2" on both ends of pole.

21 Holes

Rev. 2 - Added star lock on butt and added pre-drilled holes for communications.

Clark Public Utilities

CONSTRUCTION STANDARDS

115kV TRANSMISSION LINE
GENERAL POLE DRILLING
SPECIFICATION

REVISIONS

R	DATE	ENGR	OPS
1	12/28/16	KJP	
2	3/12/20	KJP	

PAGE: 1 of 1

TP2

CAD FILE: TP2

APP: HWH/DK
DATE: 2/02

SECTION 500

Weight of Coastal Douglas Fir Penta or Copper Naphthenate					
Class	H1	H2	H3	H4	H6
Pole Length (ft)	Estimated Weight (lb) ±10%				
60	3149	3542	3961	4358	5305
65	3534	3973	4432	4920	5970
70	3944	4424	4982	5515	6663
75	4379	4953	5502	6084	7396
80	4834	5457	6052	6749	8028
85	5310	5982	6630	7376	8918
90	5752	6470	7302	8020	9733
95	6273	7044	7860	8725	10545
100	6745	7569	8434	9455	11382
105	7314	8192	9123	10143	12259

Note: Contact Standards Engineering for weights of other poles. Weights are estimated from typical wood density and pole dimensions.

600
GROUNDING

12/23/2022

~	N	Installation of Grounding Assemblies
C	N1,N2	Basic Units - Grounding
C	N3,N4	Basic Units - Copperweld Grounding - Pole Ground Repair
~	TN0	Static Wire History/Policy
C	TN1	Static Wire Assembly - Tangent and Angle
C	TN2	Static Wire Assembly - In-Line Deadend
C	TN3	Static Wire Assembly - In-Line Double Deadend
C	TN4	Static Wire Assembly - Double Deadend 90°

N New Standard
R Redrawn Standard
C Changed Standard
~ No Change

Grounding Installations - Distribution Circuits

The minimum requirements for grounding assemblies are specified in the National Electrical Safety Code (IEEE C2-2017).

Rule #93-A: Copper-clad steel ground without joint or splice, if possible, free from sharp bends and as short as possible.

Rule #93-C-2: Ground for AC distribution shall have not less than 1/5 of the line conductance. (#4 Cu-equivalent copper-clad steel).

Rule #94-B: Driven electrodes, if practicable, shall be below permanent moisture level, minimum size 5/8" x 8', driven eight (8) feet deep. When rod cannot be driven eight (8) feet deep, install second rod on opposite side of pole and interconnect ground wire. The top of the ground rod shall be flush with or below the ground level unless suitably protected.

Rule #97-A: Ground conductors shall be run separately to ground for:

- Surge Arresters over 750v and frames of any equipment operating over 750v (see exceptions below).
- Lighting and power circuits under 750v.
- Shield wires of power circuits

Rule #97-B: An interconnection of primary surge arrester ground and primary and secondary neutral is permitted on a multi-grounded system. This solid interconnection shall be made since surge current is routed through several parallel ground impedances and the danger of insulation damage no longer exists even under conditions of high surge current and high ground impedance.

Rule #215-C: Non-current-carrying parts shall be grounded unless they are 8 feet or more above readily accessible surfaces or they are otherwise isolated or guarded.

Rev. 2 - Updated for 2017 NESC

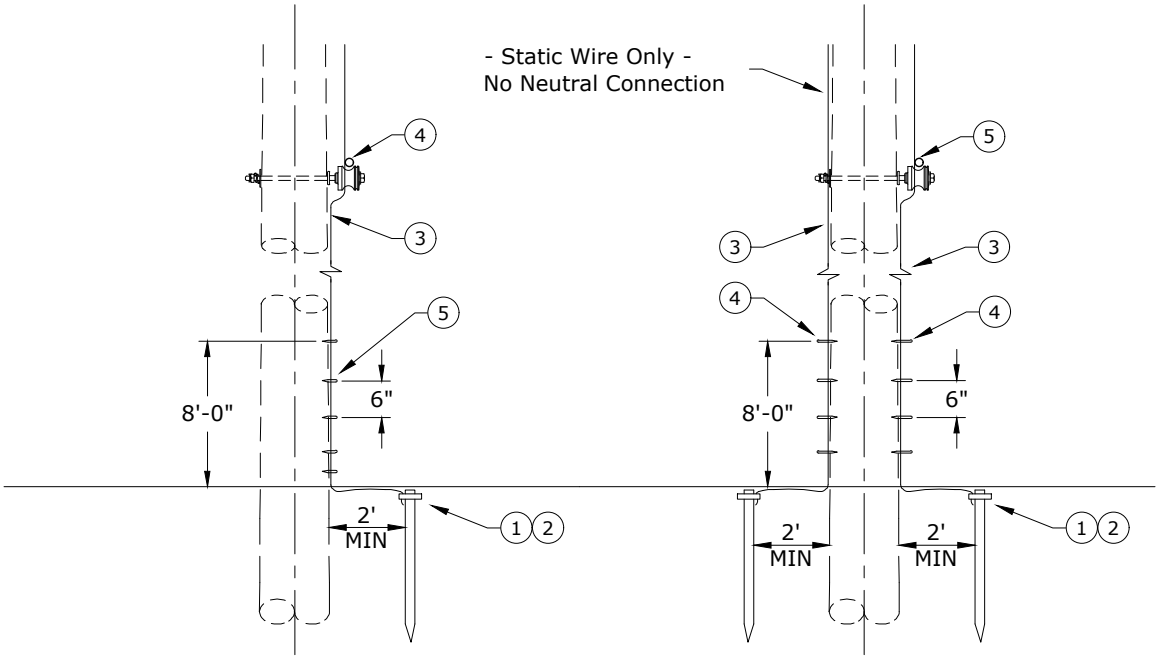

N1 N2

Notes:
1. Staple every 6" from ground line up to 8' above ground.
2. Top of rod must be below final grade.

Rev 6 - Changed from Cabelok to H-Tap Connector

ITEM NO.	DESCRIPTION	N1	
		QTY	S/N
1	Rod, Ground, 5/8" x 8'	1	1124
2	Clamp, Ground Rod, 5/8", Small, Bronze	1	281
3	Conductor, Copper-Clad Steel, Black w/ Green Stripe, #4 Cu Equivalent, 40% Annealed	40	1512
4	Connector, H-Tap, Al/Cu, Run #2-2/0 Str - Tap #6-#1 Str ✲	1	413
5	Staple, Ground, Barbed, Galvanized, 1 1/2"	24	2707

ITEM NO.	DESCRIPTION	N2	
		QTY	S/N
1	Rod, Ground, 5/8" x 8'	2	1124
2	Clamp, Ground Rod, 5/8", Small, Bronze	2	281
3	Conductor, Copper-Clad Steel, Black w/ Green Stripe, #4 Cu Equivalent, 40% Annealed	100	1512
4	Staple, Ground, Barbed, Galvanized, 1 1/2"	40	2707
5	Connector, H-Tap, Al/Cu, Run #2-2/0 Str - Tap #6-#1 Str ✲	1	413

Clark Public Utilities

CONSTRUCTION STANDARDS

BASIC UNITS
GROUNDING

REVISIONS

R	DATE	ENGR	OPS
3	12/4/14	KJP	
4	10/27/17	KJP	
5	9/12/18	KJP	
6	11/24/22	KJP	

PAGE: 1 of 1

N1,N2

CAD FILE: N1,N2

APP:

DATE: 1/31/80

SECTION 600

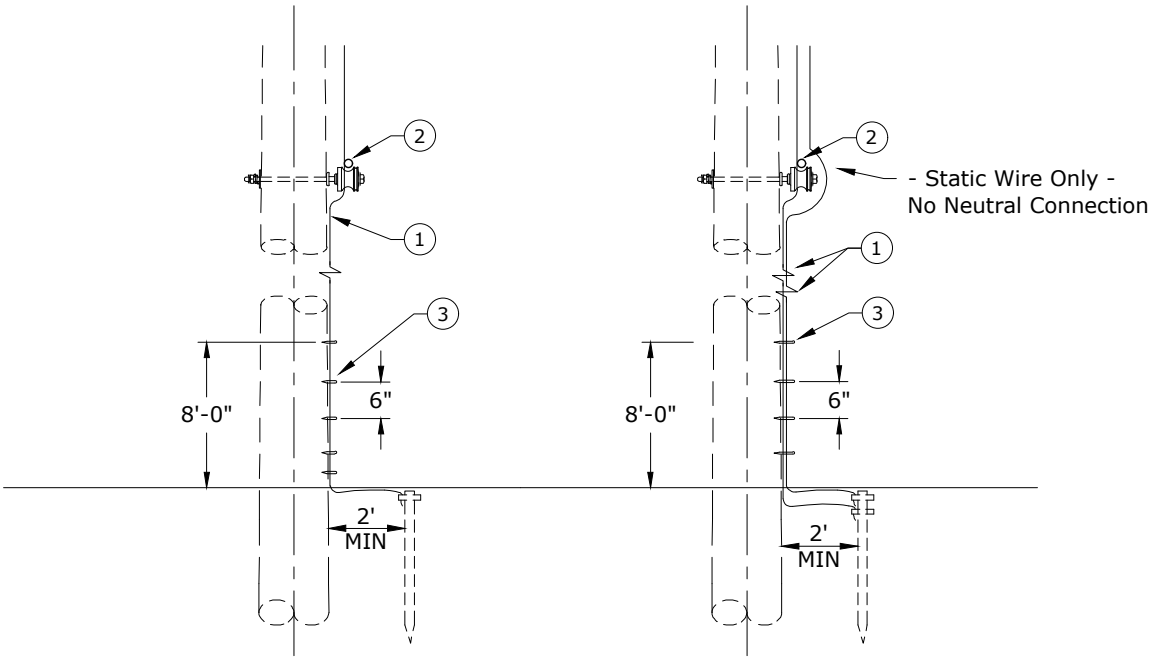

N3 N4

Notes:
1. Staple every 6" from ground line up to 8' above ground.
2. Top of rod must be below final grade.
3. For N4, the entire static wire does not need to be replaced for the repair. The static wire may be spliced around the height of the neutral. It will depend on how much of the ground wire is missing.

Rev 4 - Changed from Cabelok to H-Tap Connector

ITEM NO.	DESCRIPTION	N3	
		QTY	S/N
1	Conductor, Copper-Clad Steel, Black w/ Green Stripe, #4 Cu Equivalent, 40% Annealed ✲	40	1512
2	Connector, H-Tap, Al/Cu, Run #2-2/0 Str - Tap #6-#1 Str ✲	1	413
3	Staple, Ground, Barbed, Galvanized, 1 1/2"	24	2707

ITEM NO.	DESCRIPTION	N4	
		QTY	S/N
1	Conductor, Copper-Clad Steel, Black w/ Green Stripe, #4 Cu Equivalent, 40% Annealed ✲	72	1512
2	Connector, H-Tap, Al/Cu, Run #2-2/0 Str - Tap #6-#1 Str ✲	1	413
3	Staple, Ground, Barbed, Galvanized, 1 1/2"	24	2707

Clark Public Utilities

CONSTRUCTION STANDARDS

BASIC UNITS
GROUNDING
POLE GROUND REPAIR

REVISIONS

R	DATE	ENGR	OPS
1	12/4/2014	KJP	
2	10/27/17	KJP	
3	9/12/18	KJP	
4	11/24/22	KJP	

PAGE: 1 of 1

N3,N4

CAD FILE: N3,N4

APP: CM/AH
DATE: 8/25/09

SECTION 600

Static Wire History/Policy

CPU used to install static (shield) wires over transmission lines ½ mile from the substation in all directions.

A change was made to a new style substation surge arrester. The manufacturers claimed they would eliminate the need for static wires. CPU had experienced failures of existing static wires that fell into the transmission on multiple occasions during ice storms. Operations questioned the need for static wires. The decision was made to eliminate in some cases. Operations preferred the THPA standard (which does not allow for static wire) and would like to limit static wire to areas of known lightning problems.

Subsequent information shows that the new surge arresters (90kV) do not completely protect substation transformers as thought. The Chelatchie transformer was damaged by a nearby lightning strike. The surge arrester failed when the line was re-energized.

A determination was made to install static wires out ½ mile from substations when possible but each case would be examined individually to see if it made sense. Substation transformers are now approximately $1 million, and reliability is a customer priority.

Systems Engineering should be consulted before new transmission is designed or maintenance on existing transmission within a ½ mile of the substation is done so the occurrence of lightning in the area of that substation can be evaluated.

K. Perzanowski
January 9, 2012

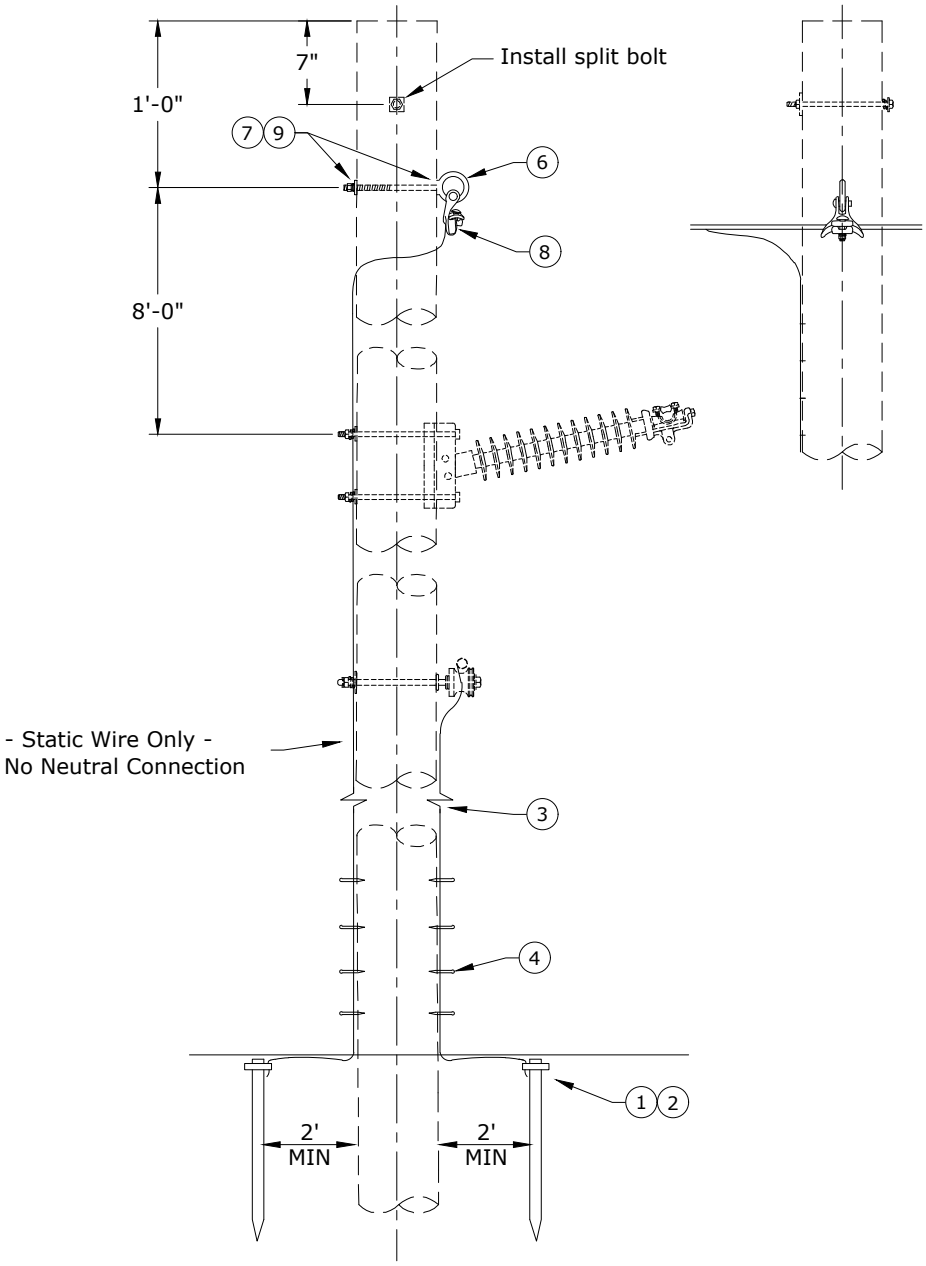

Rev 3 - Changed from Cabelok to H-Tap Connector

ITEM NO.	DESCRIPTION	TN1 N2 QTY	S/N
1	Rod, Ground, 5/8" x 8'	2	1124
2	Clamp, Ground Rod, 5/8", Small, Bronze	2	281
3	Conductor, Copper-Clad Steel, Black w/ Green Stripe, #4 Cu Equivalent, 40% Annealed ✲	100	1512
4	Staple, Ground Wire, Barbed, Galv. 1 1/2"	40	2707
5	Connector, H-Tap, Al/Cu, Run #2-2/0 Str - Tap #6-#1 Str ✲	1	413

ITEM NO.	DESCRIPTION	ADDITIONAL MATERIAL QTY	S/N
6	Bolt, Shoulder Eye, 3/4" x 12" Galv., 18,350 lbs. Ultimate Tensile	1	186
7	Washer, Curved, Cast, 4" x 4" x 13/16"	2	1910
8	Clamp, Angle Straight .16-.75, Max Angle = 120°, 11,000 lbs. Ultimate Strength	1	273
9	Washer, Lock, Spring, Double Coil, Galv., 3/4"	2	2218

Clark Public Utilities

CONSTRUCTION STANDARDS

STATIC WIRE ASSEMBLY
TANGENT AND ANGLE

REVISIONS

R	DATE	ENGR	OPS
1	8/01	REDRAWN	IN CAD
2	1/4/17	CM	DK
3	11/24/22	KJP	

PAGE: 1 of 1

TN1

CAD FILE: TN1

APP:

DATE: 5/12/66

SECTION 600

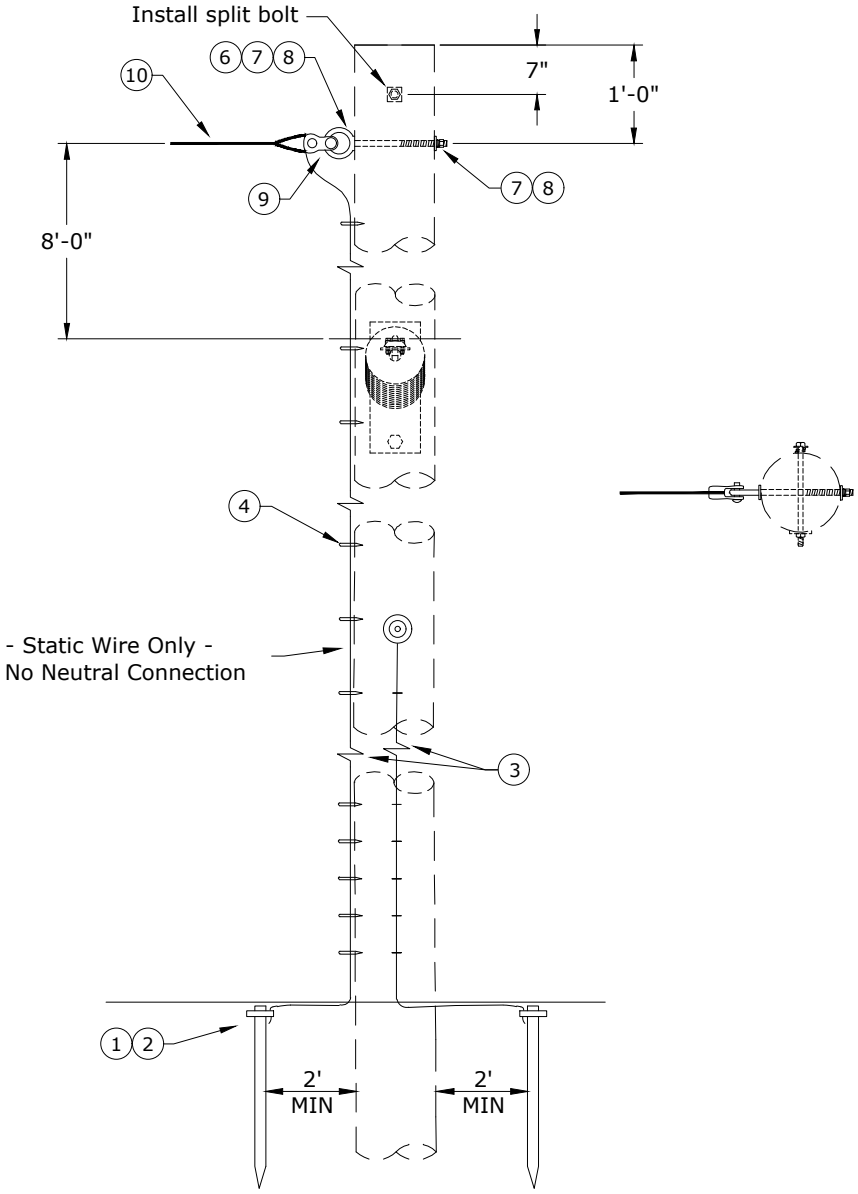

Rev 3 - Changed from Cabelok to H-Tap Connector

ITEM NO.	DESCRIPTION	TN2 N2 QTY	S/N
1	Rod, Ground, 5/8" x 8'	2	1124
2	Clamp, Ground Rod, 5/8", Small, Bronze	2	281
3	Conductor, Copper-Clad Steel, Black w/ Green Stripe, #4 Cu Equivalent, 40% Annealed ✲	100	1512
4	Staple, Ground Wire, Barbed, Galv., 1 1/2"	40	2707
5	Connector, H-Tap, Al/Cu, Run #2-2/0 Str - Tap #6-#1 Str ✲	1	413

ITEM NO.	DESCRIPTION	ADDITIONAL MATERIAL QTY	S/N
6	Bolt, Shoulder Eye, 3/4" x 12" Galv., 18,350 lbs. Ultimate Tensile	1	186
7	Washer, Curved, Cast, 4" x 4" x 13/16" Hole	2	1910
8	Washer, Lock, Spring, Double Coil, Galv., 3/4"	2	2218
9	Clevis, Thimble, 1 1/4" Dia., 10M Guy	1	1628
10	Grip, Guy, 10M	1	713

Clark Public Utilities

CONSTRUCTION STANDARDS

STATIC WIRE ASSEMBLY
IN-LINE DEADEND

REVISIONS

R	DATE	ENGR	OPS
1	8/01	REDRAWN	IN CAD
2	1/4/17	CM	DK
3	11/24/22	KJP	

PAGE: 1 of 1

TN2

CAD FILE: TN2

APP:

DATE: 5/12/66

SECTION 600

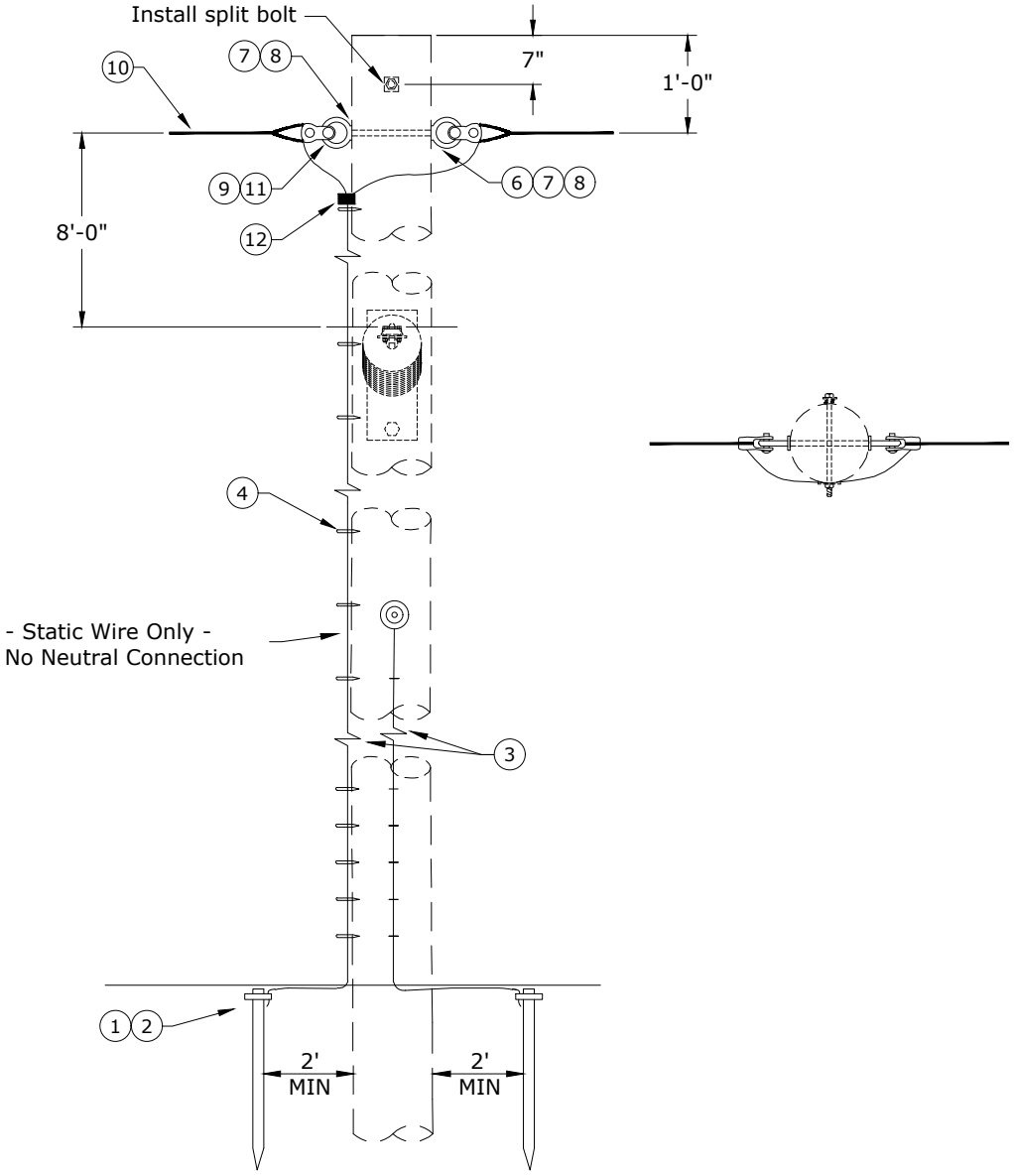

Rev 3 - Changed from Cabelok to H-Tap Connector

ITEM NO.	DESCRIPTION	TN3 N2 QTY	S/N
1	Rod, Ground, 5/8" x 8'	2	1124
2	Clamp, Ground Rod, 5/8", Small, Bronze	2	281
3	Conductor, Copper-Clad Steel, Black w/ Green Stripe, #4 Cu Equivalent, 40% Annealed ✡	100	1512
4	Staple, Ground Wire, Barbed, Galv., 1 1/2"	40	2707
5	Connector, H-Tap, Al/Cu, Run #2-2/0 Str - Tap #6-#1 Str ✡	1	413
ITEM NO.	DESCRIPTION	ADDITIONAL MATERIAL QTY	S/N
6	Bolt, Shoulder Eye, 3/4" x 14" Galv., 18,350 lbs. Ultimate Tensile	1	187
7	Washer, Curved, Cast, 4" x 4" x 13/16" Hole	2	1910
8	Washer, Lock, Spring, Double Coil, Galv., 3/4"	2	2218
9	Clevis, Thimble, 1 1/4" Dia., 10M Guy	2	1628
10	Grip, Guy, 10M	2	713
11	Nut, Eye, Oval, 3/4" Galv.	1	914
12	Connector, Crimpet, Cu 2/0-1/0 To #2-#6	1	456

Clark Public Utilities

CONSTRUCTION STANDARDS

STATIC WIRE ASSEMBLY
IN-LINE DOUBLE DEADEND

REVISIONS

R	DATE	ENGR	OPS
1	8/01	REDRAWN	IN CAD
2	1/4/17	CM	DK
3	11/24/22	KJP	

PAGE: 1 of 1

TN3

CAD FILE: TN3

APP:

DATE: 5/12/66

SECTION 600

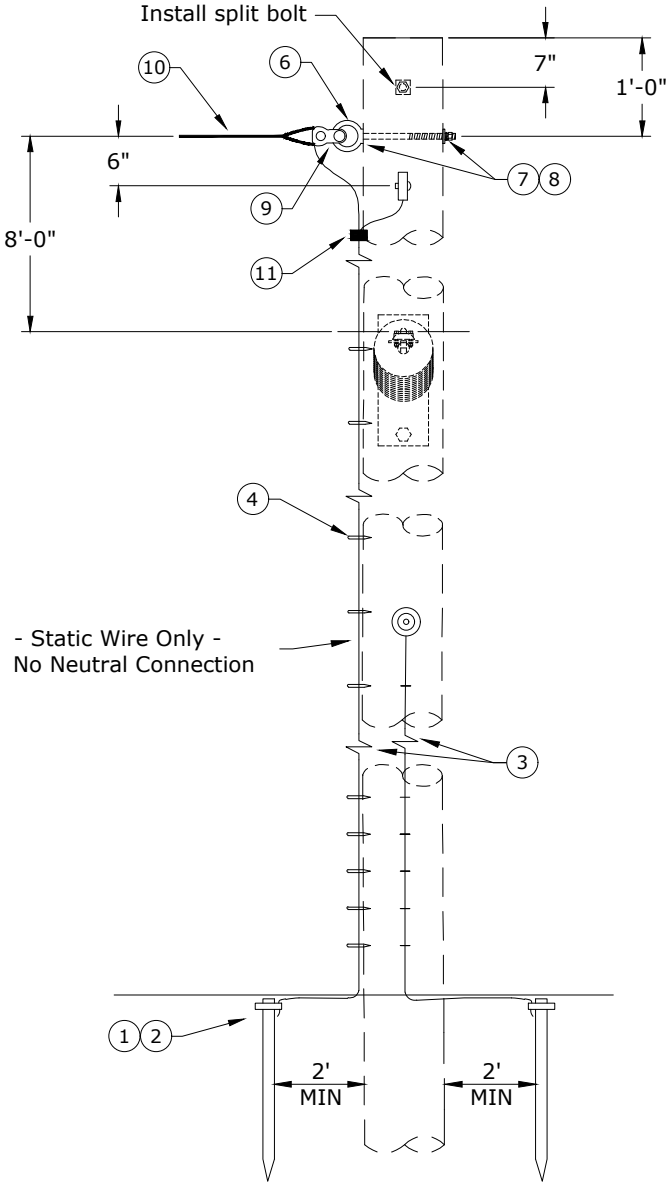

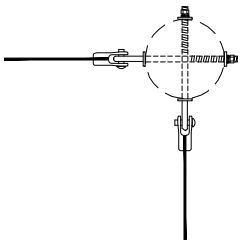

Rev 3 - Changed from Cabelok to H-Tap Connector.

TN4

ITEM NO.	DESCRIPTION	N2 QTY	N2 S/N
1	Rod, Ground, 5/8" x 8'	2	1124
2	Clamp, Ground Rod, 5/8", Small, Bronze	2	281
3	Conductor, Copper-Clad Steel, Black w/ Green Stripe, #4 Cu Equivalent, 40% Annealed ✲	100	1512
4	Staple, Ground Wire, Barbed, Galvanized, 1 1/2"	40	2707
5	Connector, H-Tap, Al/Cu, Run #2-2/0 Str - Tap #6-#1 Str ✲	1	413

ITEM NO.	DESCRIPTION	ADDITIONAL MATERIAL QTY	ADDITIONAL MATERIAL S/N
6	Bolt, Shoulder Eye, 3/4" x 12" Galv., 18,350 lbs. Ultimate Tensile	2	186
7	Washer, Curved, Cast, 4" x 4" x 13/16" Hole	4	1910
8	Washer, Lock, Spring, Double Coil, Galv., 3/4"	4	2218
9	Clevis, Thimble, 1 1/4" Dia., 10M Guy	1	1628
10	Grip, Guy, 10M	2	713
11	Connector, Crimpet Cu 2/0-1/0 To #2-#6	1	456

Clark Public Utilities

CONSTRUCTION STANDARDS

STATIC WIRE ASSEMBLY
DOUBLE DEADEND
90°

REVISIONS

R	DATE	ENGR	OPS
1	8/01	REDRAWN	IN CAD
2	1/4/17	CM	DK
3	11/24/22	KJP	

PAGE: 1 of 1

TN4

CAD FILE: TN4

APP:

DATE: 5/12/66

SECTION 600

700
GUYS AND ANCHORS

2/11/2025

C	G	Guy and Anchor Selection
~	GO	Guy and Anchor Chart
~	G1A,G2A, G3A	Single Helix Screw Anchors
~	G3,G4	Expanding and Crossplate Anchors
~	G4A, G4B	Multi-Helix Screw Anchors
~	G5	Sidewalk Guy
~	G9,G10	Rock Anchors
~	G30-G37	Double Guy Attachments
~	G40-G45	Single Guy Attachments
~	GDG50-GDG81	Down Guys
~	GSG50-GSG85	Span Guys

N New Standard
R Redrawn Standard
C Changed Standard
~ No Change

SCOPE

This section covers selection of down guys, span guys, sidewalk guys, push braces and anchors. The selections are based upon wood strengths, guy component strengths, anchor strengths and soil holding power of anchors.

DEFINITIONS (Taken from The Lineman's and Cableman's Handbook, Seventh Edition)

1. Down Guy-

Consists of a wire running from the attachment near the top of the pole to a rod and anchor installed in the ground.

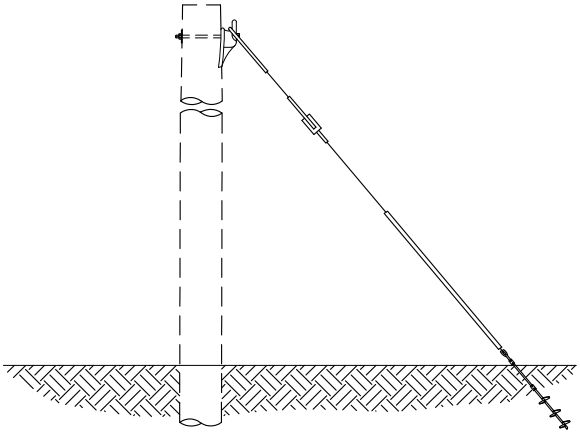

2. Span Guy-

Consists of a guy wire installed from the top of a pole to the top of an adjacent pole to remove the strain from the line conductors.

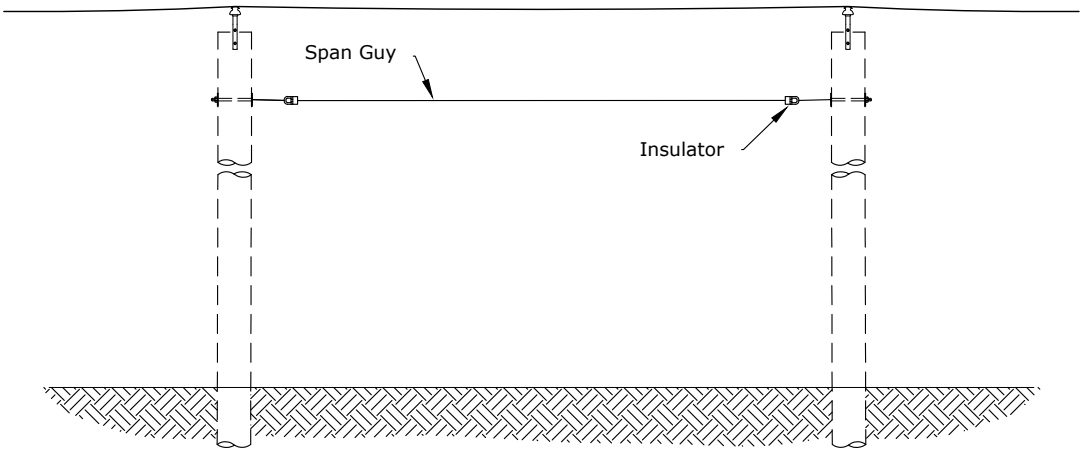

Rev 3: Updated to 2023 NESC.

3. Head Guy-

A guy wire running from the top of a pole to a point below the top of the adjacent pole.

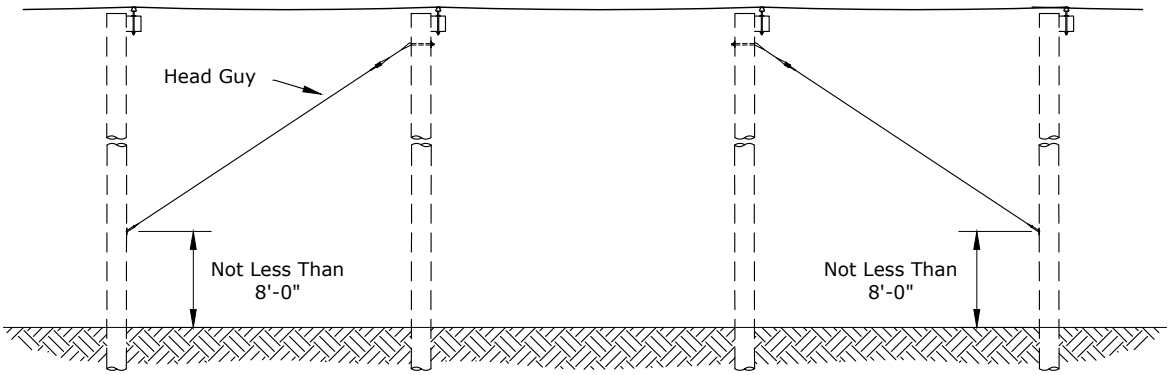

4. Guy Stub-

A guy wire installed between a line pole and a stub pole. The span guy, guy stub pole, and the down guy make up the guy stub.

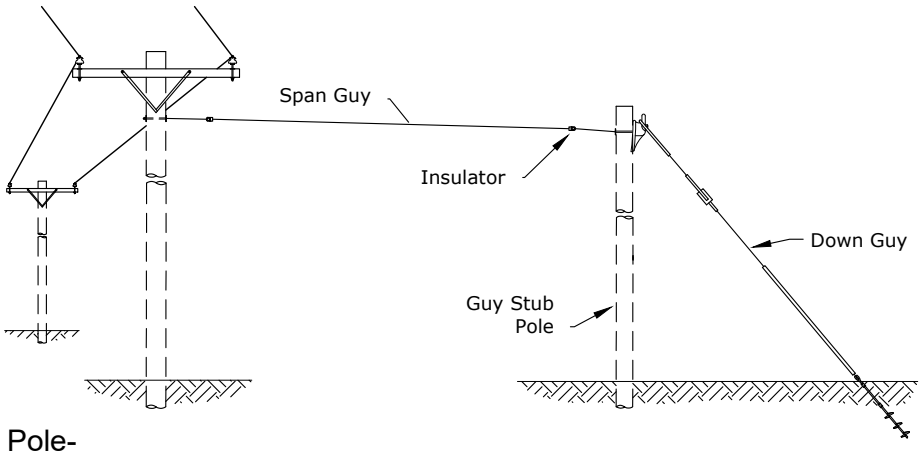

5. Push Pole-

A pole used as a brace to a line pole.

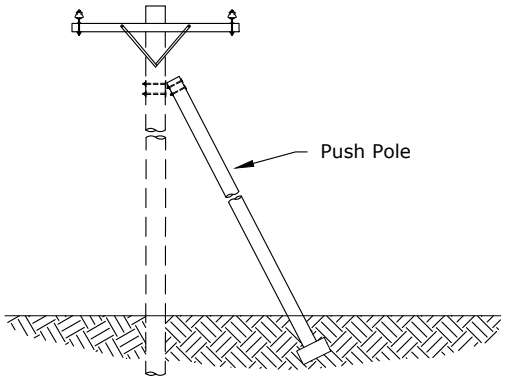

Rev 3: Updated to 2023 NESC.

Clark Public Utilities

CONSTRUCTION STANDARDS

GUY & ANCHOR SELECTION

REVISIONS

R	DATE	ENGR	OPS
1	2/22/00	JEH	
2	2/24/11	CM	AH
3	2/11/25	CM	GM

G

CAD FILE: G

APP: GGW

DATE: 4/1/86

SECTION 700

GENERAL

1. Guying

a) Guying assemblies include down, span and sidewalk types. A push brace consisting of a pole and attachment fittings may be used in place of tensioned wire guying only where tension guying is impossible by reason of location or rights-of-way.

b) Guying requirements can often be advantageously combined on a deadend pole, a span or more away by extending the circuit or by use of span guys in order to provide a reduced combined guying load on the same pole. A sidewalk guy is an expensive method of guying and provides limited support, particularly on taller poles, due to the comparatively short guy lead. DO NOT use a sidewalk guy if a down or span guy is possible.

c) Guy assemblies are designed for the maximum allowable load which may be supported by the pole and the related hardware. Heavy duty guying will normally require the use of multiple guying attachments.

d) A guy marker shall be used on each down guy and sidewalk guy near places where persons are normally encountered or reasonable anticipated. A minimum of one marker per anchor is required elsewhere. It should be noted that guy markers DO NOT PROTECT OR "GUARD" a down/sidewalk guy, but rather warn the public of its presence. ☼

2. Sidewalk Guy Insulation

Sidewalk guys shall have guy insulators installed in the guy strand above the horizontal guy strut. The breakers should be at a point that will allow at least 6" clearance between the breaker and the strut attachment to the pole, should the guy wire become broken.

3. Grounded Guys

Grounded guys shall not be used. All guys on transmission and distribution circuits shall have insulation sections (Johnny balls or fiberglass rods) installed on all new and rebuilt circuits. Grounded guys are to be replaced by insulated guys when work is done on that pole.

4. Application of Guy Insulators

It is impractical to show every NESC requirement for applying guy strain insulators. A clear understanding of the rules will provide for the correct applications. These guidelines will help in understanding the requirements.

Guideline 1 (see figure #1) - All down guys shall have a minimum of one guy insulator. (NESC 215C2-2023)

Guideline 2 - All span guys will have a minimum of two guy insulators. (NESC 215C2-2023)

Guideline 3 (see figure #2) - On jointly used poles, down guys that pass within 12 inches of supply conductors, and also pass within 12 inches of communication cables, shall be insulated with a guy insulator at a point below the lowest supply conductor and above the highest communication cable. (NESC 235E, Table 235-6, Note 1-2023)

Guideline 4 (see figure #1) - All guy insulators shall be located at least 8 feet above the ground including when the guy would sag or break. (NESC 215C2-2023)

Rev 3: Updated to 2023 NESC.

Guideline 5 (see figure #1) - Guy insulators shall be placed so that in case any guy wire contacts, or is contacted by an energized conductor or part, the voltage will not be transferred to other facilities on the structure. (NESC 215C2-2023)

Guideline 6 (see figure #3) - Guys may sag or break, bringing them into contact with energized conductors, jumpers, or bushings to create a hazard to the public. Guy insulators shall be placed so that when any guy sags down or falls upon another facility, the insulators will remain effective. (NESC 215C2-2023)

Figure 1: Guidelines 1, 4, 5, and 6

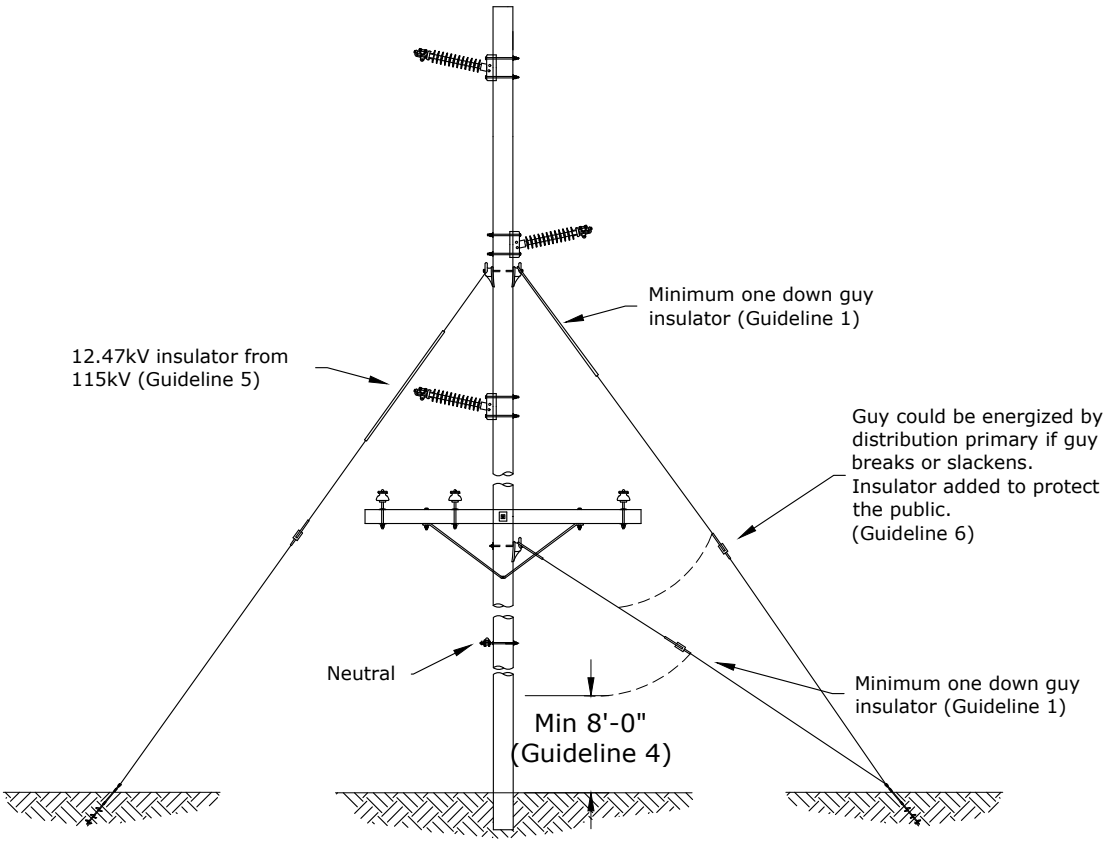

Rev 3: Updated to 2023 NESC.

Clark Public Utilities

CONSTRUCTION STANDARDS

GUY & ANCHOR SELECTION

REVISIONS

R	DATE	ENGR	OPS
1	2/22/00	JEH	
2	2/24/11	CM	AH
3	2/11/25	CM	GM

G

CAD FILE: G

APP: GGW

DATE: 4/1/86

SECTION 700

Figure 2: Guying near communication cable (Guideline 3)

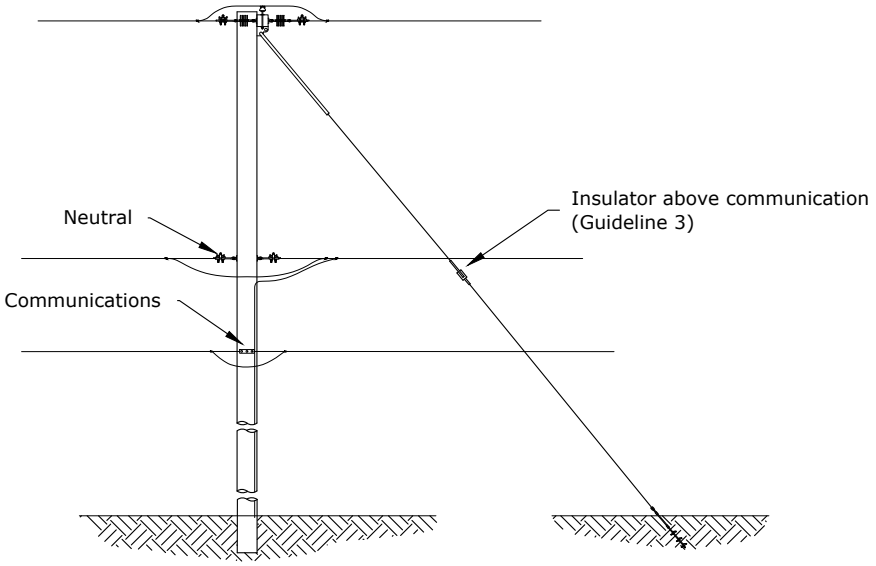

Figure 3: Allow for guys to sag or break (Guideline 6)

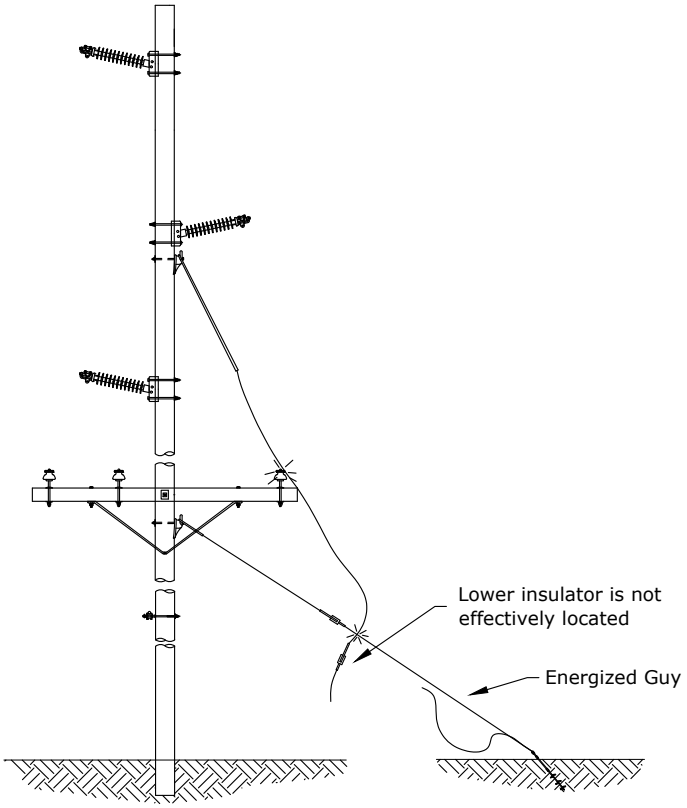

Rev 3: Updated to 2023 NESC.

Clark Public Utilities

CONSTRUCTION STANDARDS

GUY & ANCHOR SELECTION

REVISIONS

R	DATE	ENGR	OPS
1	2/22/00	JEH	
2	2/24/11	CM	AH
3	2/11/25	CM	GM

G

CAD FILE: G

APP: GGW

DATE: 4/1/86

SECTION 700

5. Anchors

Anchors shall be located so as to provide as large a lead over height ratio with as little interference to the public as possible.

ANCHOR SELECTION

1. Anchor Selection in General

a. Anchor selection is based upon guy tension, type of soil, available installation equipment and location.
b. Power installed screw anchors are the best choice if soil and location permit their use.
c. A plate anchor may be used if a hole can be dug either by machine or blasting or hand dug at inaccessible locations.
d. If solid rock is encountered, specify one of the rock anchors.
e. Some swamp areas cannot be covered by these anchors and must have special design consideration.

2. Soil Classification

The table of soil classification data which follows is for general use in specifying anchors.

SOIL CLASSIFICATION DATA			
CLASS	PROBE VALUE	COMMON SOIL-TYPE DESCRIPTION	GEOLOGICAL SOIL CLASSIFICATION
0	–	Sound hard rock, unweathered	Granite, Basalt, Massive Limestone
1	750-1600 in-lbs	Very dense and/or cemented sands; coarse gravel and cobbles	Caliche, (nitrate-bearing gravel/rock)
2	600-750 in-lbs	Dense fine sand; very hard silts and clays (may be preloaded)	Basal Till; Boulder Clay; Caliche; Weathered Laminated Rock
3	500-600 in-lbs	Dense sands and gravel; hard silts and clays	Glacial Till; Weathered Shales, Schist, Gneiss and Siltstone
4	400-500 in-lbs	Medium dense sand and gravel; very stiff to hard silts and clays	Glacial Till, Hardpan and Marls
5	300-400 in-lbs	Medium dense coarse sands and sandy gravels; stiff to very stiff silts and clays	Saprolites, Residual Soils
6	200-300 in-lbs	Loose to medium dense fine to coarse sands to stiff clays and silts	Dense Hydraulic Fill; Compacted Fill; Residual Soils
7	100-200 in-lbs	Loose fine sand; alluvium; loess; medium-stiff and varied clays; fill	Flood Plain Soils; Lake Clays; Adobe; Gumbo, Fill
8	< 100 in-lbs	Peat, organic silts; inundated silts, fly ash, very loose sands, very soft to soft clays	Miscellaneous Fill, Swamp Marsh

Rev 3: Updated to 2023 NESC.

CONVERTING HYDRAULIC PRESSURE TO TORQUE

If a shear pin torque indicator is not going to be used, the operator can make a conversion chart so that pounds per square inch of system hydraulic pressure can be converted to torque at the anchor. This chart can be made by temporarily using a shear pin torque indicator and recording maximum hydraulic pressure readings when various numbers of pins shear. Each pin is equal to 500 ft-lb of torque. After the conversion chart is completed, it is not necessary to use the shear pin torque indicator. Any changes in the hydraulic motor system will require a new conversion chart. Check the accuracy of the chart annually, after any hydraulic system repairs, or before critical anchor installation such as mainline, distribution lines, or transmission lines.

TRUCK # _____ CHART DATE _____ OPERATOR _____

SYSTEM HYDRAULIC PRESSURE LBS./SQ. IN.	TORQUE IN FT. LBS	NUMBER OF SHEARED PINS	NOTES
	500	1	
	1000	2	
	1500	3	
	2000	4	
	2500	5	
	3000	6	
	3500	7	
	4000	8	
	4500	9	
	5000	10	
	5500	11	
	6000	12	
	6500	13	
	7000	14	

Rev 3: Updated to 2023 NESC.

G1A

G2A, G3A

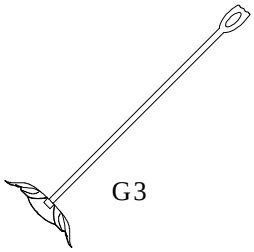

G3

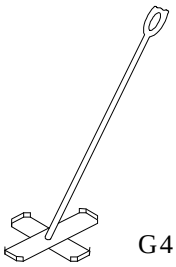

G4

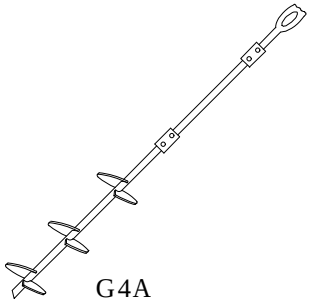

G4A

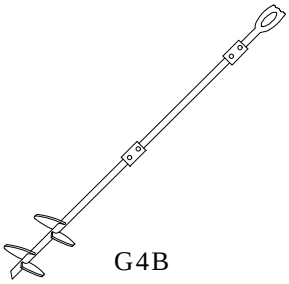

G4B

G9,G10

GUY & ANCHOR CHART			
NAME	ANCHOR	ROD SIZE	ULTIMATE HOLDING CAPACITY*
G1A	6" Handscrew	3/4"	6,500
G2A	10" Helix	1"	34,800
G3	12" Expanding Plate	1 1/4"	40,000
G3A	14" Helix	1"	36,000
G4	24" Crossplate	1 1/4"	58,000
G4A	Triple Helix 8-10-12"	1 3/4"	100,000
G4B	Double Helix 8-10"	1 3/4"	100,000
G9	Rock	1"	36,000
G10	Rock	1"	36,000

* SEE ACTUAL STANDARD FOR CAPACITY CHARTS

Rev 2: Obsoleted G1, G2, G3B, G3C, G5A, G6Y, and G9A, and moved G5 to page 2.

Clark Public Utilities

CONSTRUCTION STANDARDS

GUY & ANCHOR CHART
ANCHORS

REVISIONS

R	DATE	ENGR	OPS
1	2/23/00	HWH	MA
2	2/24/11	CM	AH

G0

CAD FILE: G0

APP: JEH
DATE: 2/22/00

SECTION 700

ATTACHMENTS

	V_{MAX}* FIR	CEDAR
G30	11,560	9,680
G31	23,120	19,360
G32	23,120	19,360
G33	23,120	19,360
G34	35,520	26,480
G35	23,120	19,360
G36	23,120	19,360
G37	35,520	26,480
G40	23,120	19,360
G41	11,560	9,680
G42	23,120	19,360
G43	35,520	26,480
G45	11,560	9,680

NOT THREADED

* Apply Safety Factors per NESC

DOWN GUYS

	10M	18M
PORCELAIN INSULATOR (Johnny ball)	GDG50	GDG51
THIMBLE CLEVIS	GDG52	GDG53
FIBERGLASS INSULATOR	GDG70	GDG71
	GDG72	GDG73
	GDG80	GDG81

G5

SPAN GUYS

	10M	18M
	GSG50	GSG51
	GSG52	GSG53
	GSG54	GSG55
	GSG56	GSG57
	GSG70	GSG71
	GSG82	GSG83
	GSG84	GSG85

Rev 2: Obsoleted G44, GSG55, GSG60, GSG62, and added G45, GSG54, GSG55, GSG56, and GSG57.

Clark Public Utilities

CONSTRUCTION STANDARDS

GUY & ANCHOR CHART
SPAN GUYS, DOWN GUYS, ATTACHMENTS

REVISIONS

R	DATE	ENGR	OPS
1	2/23/00	HWH	MA
2	2/24/11	CM	AH

PAGE: 2 of 2 | G0 | CAD FILE: G0 | APP: JEH | DATE: 2/22/00 | SECTION 700

G1A

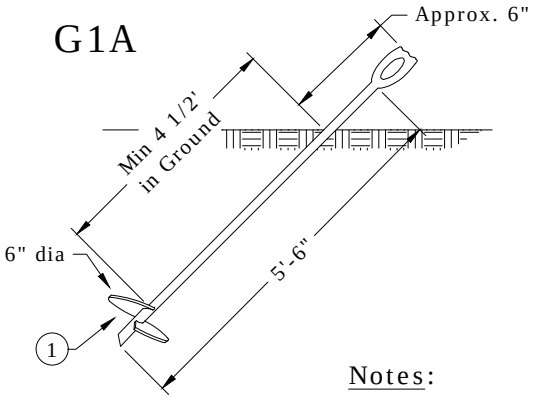

G1A	
ULTIMATE HOLDING CAPACITY	
Soil Class	**(lbs)**
7	2,500
6	5,000
5	6,500
Max Torque Rating is 400 ft-lbs.	

Notes:

1. Only this anchor may be hand installed (use in #5 to #7 soil).
2. A minimum of 4 1/2' of the G1A anchor/rod from the top of the helix must be in the ground to obtain rated holding capacity.

G2A

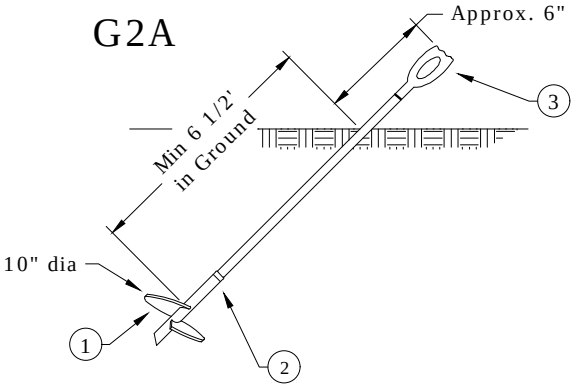

ULTIMATE HOLDING CAPACITY		
	G2A	G3A
Torque	**(lbs)**	
(ft-lbs)	10" Helix	14" Helix
	1" x 7' Rod	1" x 7' Rod + 3 1/2' Rod
500	4,200	7,350
1,000	7,600	10,700
1,500	11,000	14,050
2,000	14,400	17,400
2,500	17,800	20,750
3,000	21,200	24,100
3,500	24,600	27,450
4,000	28,000	30,800
4,500	31,400	34,150
5,000	34,800	36,000

G3A

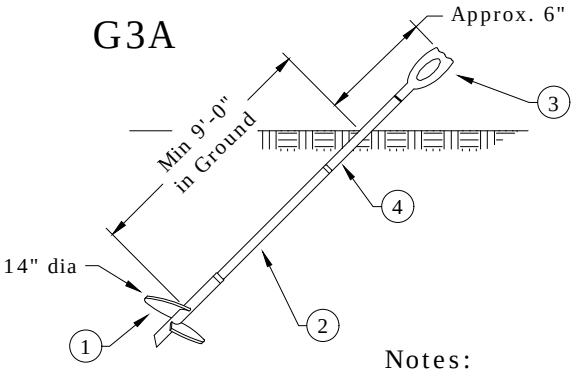

Notes:

1. A minimum of 6 1/2' of the G2A anchor/rod from the top of the helix must be in the ground to obtain the rated holding capacity.
2. A minimum of 9' of the G3A anchor/rod from the top of the helix must be in the ground to obtain the rated holding capacity.

Rev 3: Removed G3B and G3C, added material list, corrected notes, and added holding power tables.

Clark Public Utilities

CONSTRUCTION STANDARDS

SINGLE HELIX SCREW ANCHORS

REVISIONS

R	DATE	ENGR	OPS
1	7/3/82	GGW	GLE
2	6/30/86	RWG	GGW
3	2/24/11	CM	AH

PAGE:		CAD FILE:	APP: ELM	SECTION
1 of 2	G1A,G2A,G3A	G1A	DATE: 1/30/80	700

Notes:

1. See Std. G for application guidelines.
2. Install anchor rods at the same slope as the guy strand.
3. G2A and G3A are rated 15,000* ft-lbs torque and 36,000 lbs. ultimate tensile strength.
4. Holding capacity based on Chance anchoring systems.

Rev 3: Removed G3B and G3C, added material list, corrected notes, and added holding power tables.

ITEM NO.	DESCRIPTION	G1A	
		QTY.	S/N
1	6" Helix Screw Anchor	1	19

ITEM NO.	DESCRIPTION	G2A	
		QTY.	S/N
1	10" Helix Screw Anchor, 15,000 ft-lbs.	1	13
2	Anchor Rod 1" x 7' - 36,000 lbs. Ultimate Tensile	1	1116
3	Triple Eye Anchor Nut 1"	1	2335

ITEM NO.	DESCRIPTION	G3A	
		QTY.	S/N
1	14" Helix Screw Anchor, 15,000 ft-lbs.	1	14
2	Anchor Rod 1" x 7' - 36,000 lbs. Ultimate Tensile	1	1116
3	Triple Eye Anchor Nut 1"	1	2335
4	Anchor Rod 1" x 3 1/2' - 36,000 lbs. Ultimate Tensile	1	1115

Clark Public Utilities

CONSTRUCTION STANDARDS

SINGLE HELIX SCREW ANCHORS

REVISIONS

R	DATE	ENGR	OPS
1	7/3/82	GGW	GLE
2	6/30/86	RWG	GGW
3	2/24/11	CM	AH

PAGE:		CAD FILE:	APP: ELM	SECTION
2 of 2	G1A,G2A,G3A	G1A	DATE: 1/30/80	700

EXPANDING

G3

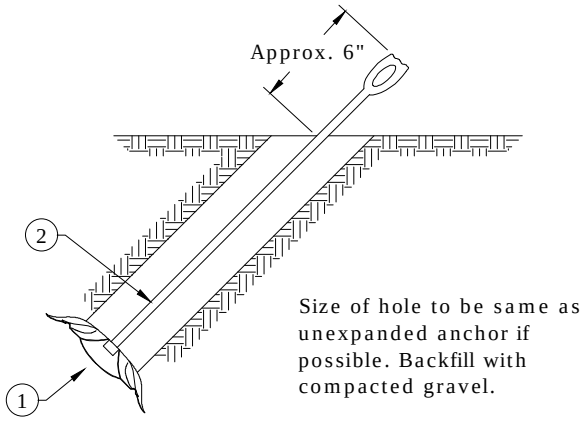

CROSSPLATE

G4

(See Notes 5 & 6)

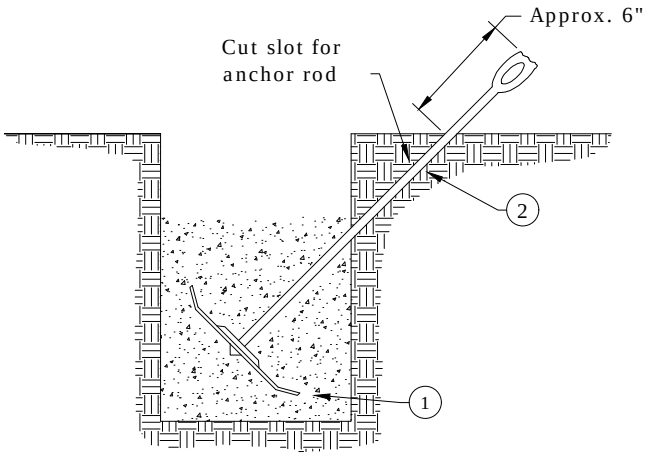

Note: Ultimate tensile strength of 1 1/4" rod is 58,000 lbs. ultimate.

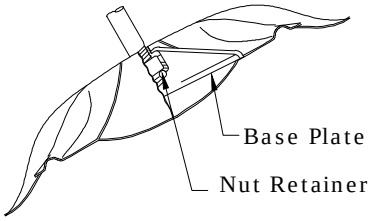

ULTIMATE HOLDING CAPACITY (ft-lbs)	
SOIL TYPE	TYPE OF ANCHOR
	G3
	12"Expanding
	1 1/4" x 10' Rod
0	N/A
1	N/A
2	N/A
3	40,000
4	34,000
5	26,500
6	21,500
7	16,000
8	N/A

Notes:

1. See Std. G for application guidelines.
2. Install anchor rods at the same slope as the guy strand.
3. Anchor rod should emerge from ground at point where stake is located.
4. Holding capacity based on Chance anchoring systems.
5. A minimum of 2 yards of concrete are needed to hold the anchor. Place 90% of concrete in front of anchor.
6. 1 1/4" rod is rated 58,000 lbs. ultimate tensile.

Rev 3: Updated strengths, obsoleted G1 & G2, changed title, corrected material, and added Note 4.

ITEM NO.	DESCRIPTION	G3	
		QTY.	S/N
1	Anchor, Expanding 12"	1	9
2	Rod, Anchor 1 1/4" x 10'	1	1118

ITEM NO.	DESCRIPTION	G4	
		QTY.	S/N
1	Anchor, Heavy Duty 24" Crossplate	1	10
2	Rod, Anchor 1 1/4" x 10'	1	1118

Clark Public Utilities

CONSTRUCTION STANDARDS

EXPANDING AND CROSSPLATE ANCHORS

REVISIONS

R	DATE	ENGR	OPS
1	4/1/86	GGW	MA
2	5/5/86	RWG	GGW
3	2/24/11	CM	AH

PAGE:		CAD FILE:	APP: ELM	SECTION
1 of 1	G3,G4	G3	DATE: 1/31/80	700

G4A

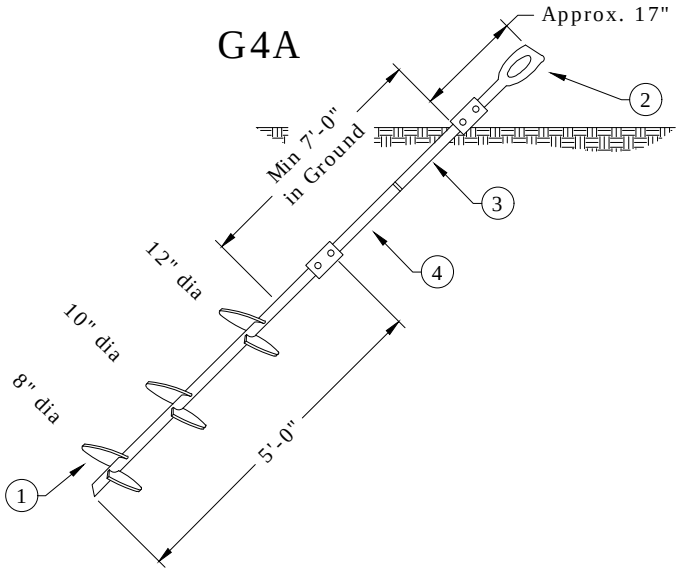

Note:
A minimum of 7' of the anchor/rod from the top of the 12" helix must be in the ground to obtain the rated holding capacity for G4A.

ULTIMATE HOLDING CAPACITY		
	G4A	G4B
Torque	**(lbs)**	
(ft-lbs)	8-10-12"	8"-10"
	(3) 1 3/4" x 3 1/2' Rod	(2) 1 3/4" x 3 1/2' Rod
500	NA	NA
1,000	NA	NA
1,500	19,000	17,000
2,000	25,000	23,000
2,500	31,000	29,000
3,000	38,000	34,000
3,500	44,000	40,000
4,000	50,000	46,000
4,500	56,000	52,000
5,000	62,000	58,000
5,500	69,922	64,140
6,000	76,279	69,971
6,500	82,635	75,802
7,000	88,992	81,633
7,500	95,348	87,464
8,000	100,000	93,295
8,500	100,000	99,126
9,000	100,000	100,000

G4B

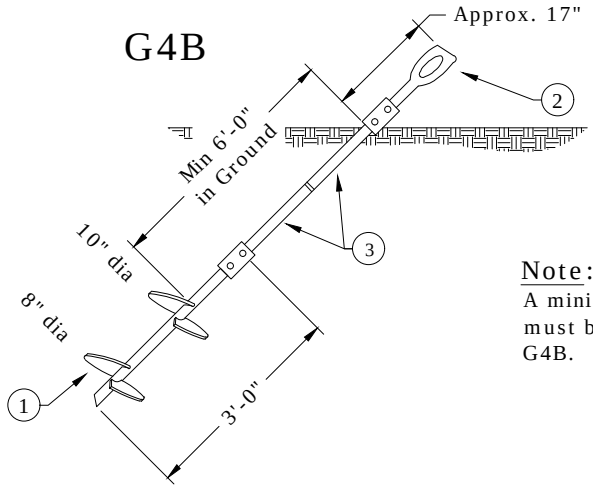

Note:
A minimum of 6' of the anchor/rod from the top of the 10" helix must be in the ground to obtain the rated holding capacity for G4B.

Notes:

1. See Std. G for application guidelines.
2. Install anchor rods at the same slope as the guy strand.
3. The G4A is for use in soft soils and G4B can be used in hard or rocky soils. They will hold up to 100,000 lbs ultimate and can be installed with torque up to 11,000 ft-lbs (22 pins). Rod is 1 3/4" square shaft.
4. Use as many extensions as needed to obtain the desired torque.
5. Holding capacity based on Chance anchoring system.

Rev. 1 - Added material list, corrected drawings and notes.

ITEM NO.	DESCRIPTION	G4A QTY.	G4A S/N
1	8-10-12" Helix Screw Anchor, 100,000 lbs. Ultimate	1	15
2	Triple Eye 1 3/4" Guy Attachment	1	2522
3	3 1/2' Anchor Rod, 1 3/4" Square Shaft, 11,000 ft-lbs. Ultimate	1	2076
4	7' Anchor Rod, 1 3/4" Square Shaft, 11,000 ft-lbs. Ultimate	1	2077

ITEM NO.	DESCRIPTION	G4B QTY.	G4B S/N
1	8-10" Helix Screw Anchor, 100,000 lbs. Ultimate	1	2074
2	Triple Eye 1 3/4" Guy Attachment	1	2522
3	3 1/2' Anchor Rod, 1 3/4" Square Shaft, 11,000 ft-lbs. Ultimate	2	2076

Clark Public Utilities

CONSTRUCTION STANDARDS

MULTI-HELIX SCREW ANCHORS

REVISIONS			
R	DATE	ENGR	OPS
1	2/24/11	CM	AH

PAGE: 1 of 1

G4A,G4B

CAD FILE: G4A

APP: RWG

DATE: 5/9/80

SECTION 700

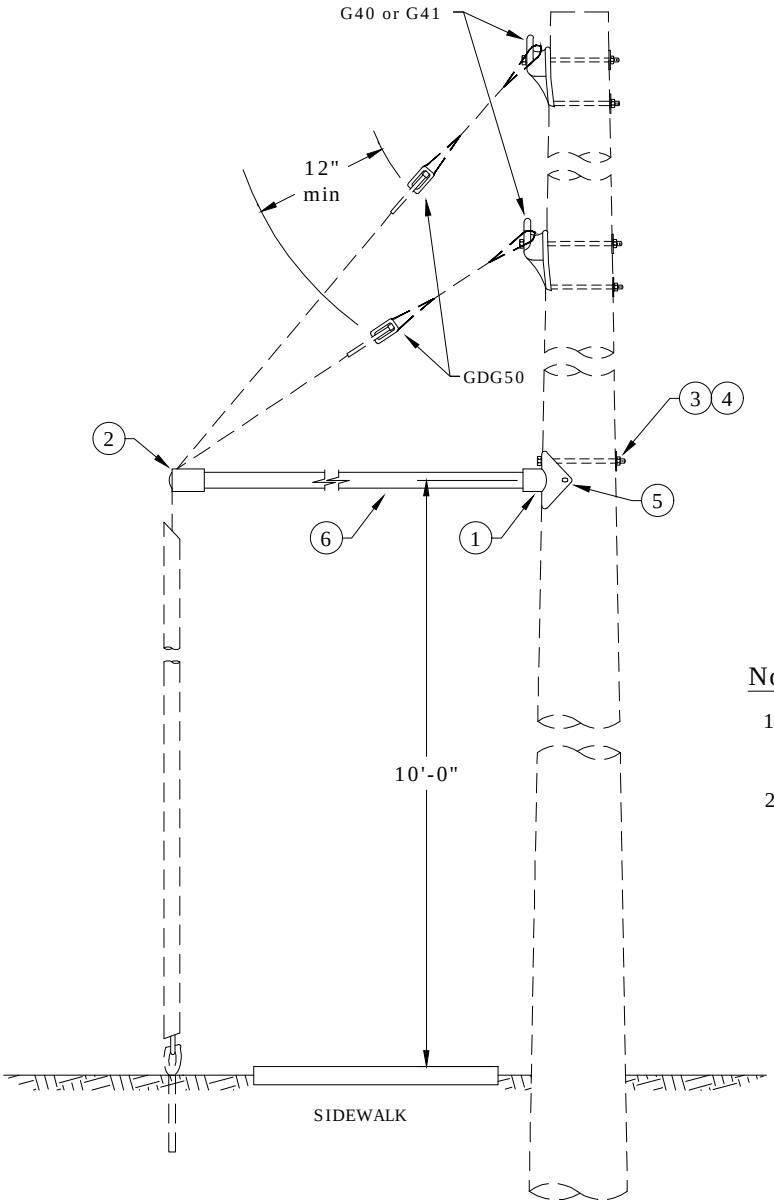

Notes:

1. Down guys and guy attachments are called for separately. Loading will determine whether one or two down guys are needed.
2. Sidewalk guys are only to be installed when 8' clearance over a sidewalk cannot be obtained with a down guy.

Rev. 2 - Corrected material lists and notes and removed G5A.

ITEM NO.	DESCRIPTION	G5 QTY.	G5 S/N
1	Fitting, Sidewalk Guy-Pole	1	631
2	Fitting, Sidewalk Triple Guy	1	633 ✲
3	Bolt, Machine 5/8" x 12"	1	155
4	Washer, Curved, Square, Cast, 3" x 3" x 3/8" Thick x 13/16" Diameter	1	1392
5	Screw, Lag 1/2" x 4 1/2"	2	1132
6	Conduit, Rigid Galv 2" x 10'	1	407 ✲

Clark Public Utilities

CONSTRUCTION STANDARDS

SIDEWALK GUY

REVISIONS

R	DATE	ENGR	OPS
1	5/5/86	AWG	GWG
2	2/24/11	CM	AH

PAGE: 1 of 1

G5

CAD FILE: G5

APP: ELM

DATE: 1/31/80

SECTION 700

G9

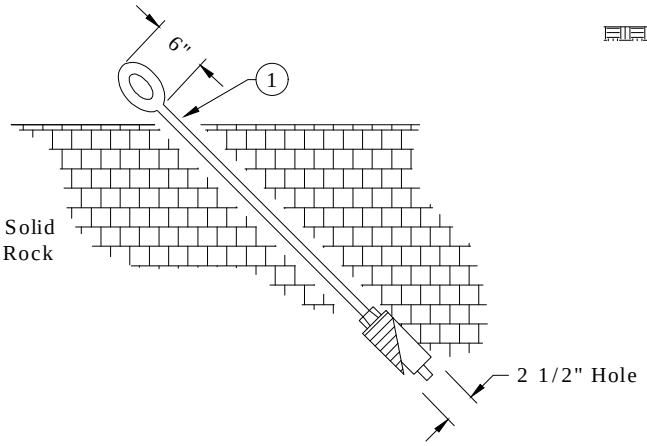

G10

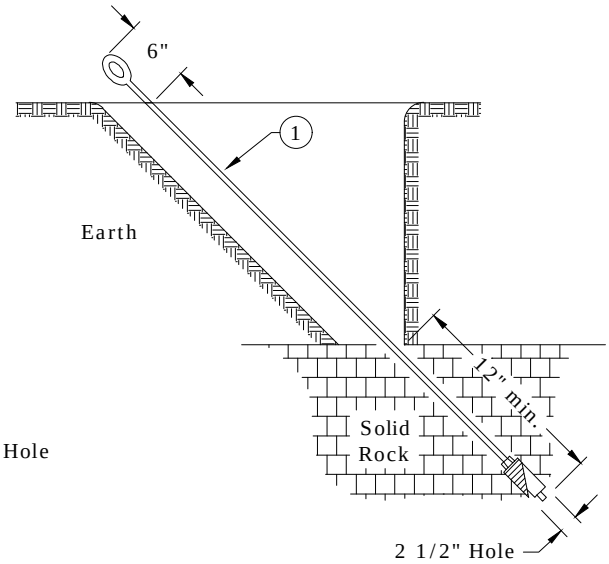

Notes:

1. Install anchor rods at the same slope as the guy strand.
2. Rods have a 36,000 lbs. ultimate tensile strength.
3. Use only where other anchor assemblies cannot be installed because of insufficient overburden.
4. Installation procedure:
   a) Drill 2 1/2" hole.
   b) Push anchor into hole.
   c) Put a bar in anchor eye, turn rod until anchor is firmly expanded.
   d) Grout.

Rev. 2 - Corrected material list, drawings, and notes, and deleted G9A.

ITEM NO.	DESCRIPTION	G9	
		QTY.	S/N
1	Anchor, Rock 1" x 30", 36,000 lbs. Ultimate	1	17

ITEM NO.	DESCRIPTION	G10	
		QTY.	S/N
1	Anchor, Rock 1" x 53", 36,000 lbs. Ultimate	1	18

Clark Public Utilities

CONSTRUCTION STANDARDS

ROCK ANCHORS

REVISIONS

R	DATE	ENGR	OPS
1	5/5/86	RWG	GGW
2	2/24/11	CM	AH

PAGE: 1 of 1

G9,G10

CAD FILE: G9

APP: ELM

DATE: 1/31/80

SECTION 700

G30

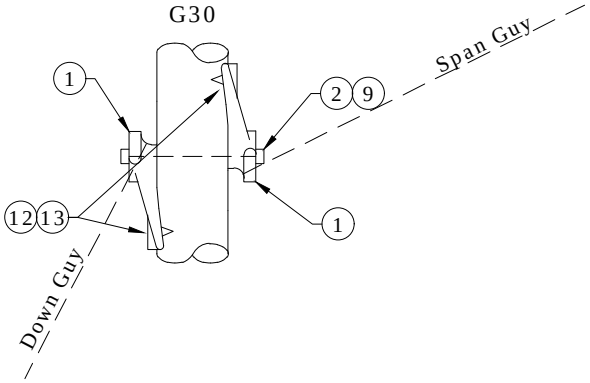

G31

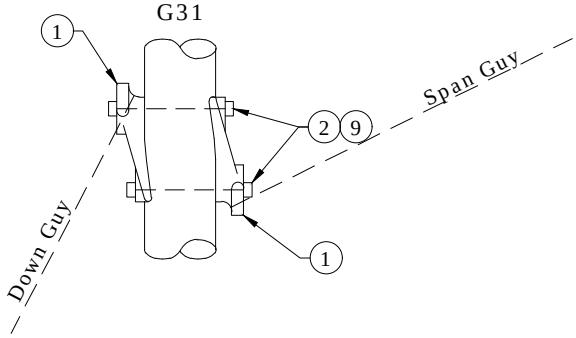

G32

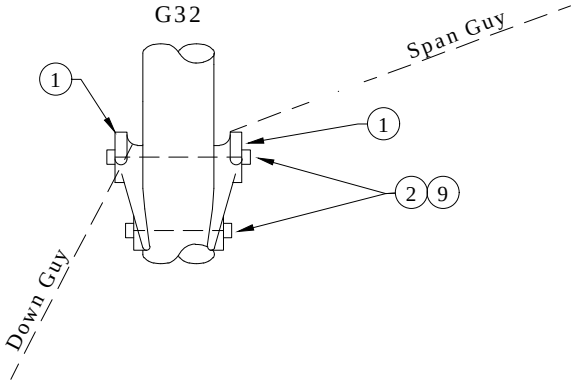

G33
G34

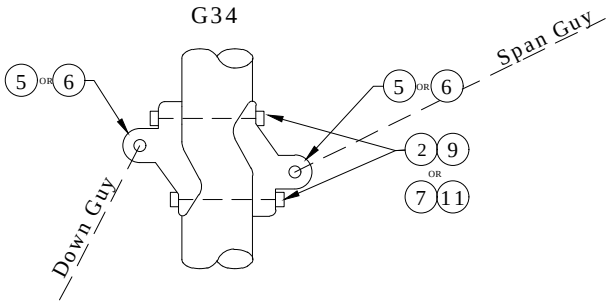

G35

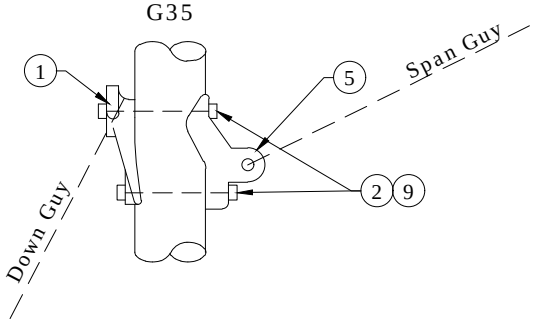

G36
G37

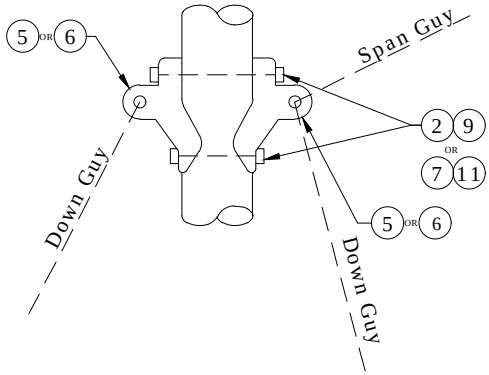

Rev. 1 - Added "double" to title, added types of guys to drawings, and corrected material lists.

Clark Public Utilities

CONSTRUCTION STANDARDS

DOUBLE GUY ATTACHMENTS

REVISIONS

R	DATE	ENGR	OPS
1	2/24/11	CM	AH

PAGE: 1 of 2

G30-G37

CAD FILE: G30

APP: GGW

DATE: 4/1/85

SECTION 700

Rev. 1 - Added "double" to title, added types of guys to drawings, and corrected material lists.

ITEM NO.	DESCRIPTION	G30	
		QTY.	S/N
1	Guy Hook, 25,400 lbs. Ultimate Tensile	2	753
2	Machine Bolt, 3/4" x 16", 18,350 lbs. Ultimate Tensile	1	175
9	Double Coil Spring Lock Washer 3/4"	1	2218
12	1/2" x 4 1/2" Lag Screw	2	1132
13	1/2" Flat Round Washer	2	1394

ITEM NO.	DESCRIPTION	G31	
		QTY.	S/N
1	Guy Hook, 25,400 lbs. Ultimate Tensile	2	753
2	Machine Bolt, 3/4" x 16", 18,350 lbs. Ultimate Tensile	2	175
9	Double Coil Spring Lock Washer 3/4"	2	2218

ITEM NO.	DESCRIPTION	G32	
		QTY.	S/N
1	Guy Hook, 25,400 lbs. Ultimate Tensile	2	753
2	Machine Bolt, 3/4" x 16", 18,350 lbs. Ultimate Tensile	2	175
9	Double Coil Spring Lock Washer 3/4"	2	2218

ITEM NO.	DESCRIPTION	G33	
		QTY.	S/N
2	Machine Bolt, 3/4" x 16", 18,350 lbs. Ultimate Tensile	2	175
5	Pole Eye Plate, 21,000 lbs. Ultimate Tensile	2	988
9	Double Coil Spring Lock Washer 3/4"	2	2218

ITEM NO.	DESCRIPTION	G34	
		QTY.	S/N
6	Pole Eye Plate, 36,000 lbs. Ultimate Tensile	2	1908
7	Machine Bolt, 7/8" x 16", 25,400 lbs. Ultimate Tensile	2	1901
11	Double Coil Spring Lock Washer 7/8"	2	2351

ITEM NO.	DESCRIPTION	G35	
		QTY.	S/N
1	Guy Hook, 25,400 lbs. Ultimate Tensile	1	753
2	Machine Bolt, 3/4" x 16", 18,350 lbs. Ultimate Tensile	2	175
5	Pole Eye Plate, 21,000 lbs. Ultimate Tensile	1	988
9	Double Coil Spring Lock Washer 3/4"	2	2218

ITEM NO.	DESCRIPTION	G36	
		QTY.	S/N
2	Machine Bolt, 3/4" x 16", 18,350 lbs. Ultimate Tensile	2	175
5	Pole Eye Plate, 21,000 lbs. Ultimate Tensile	2	988
9	Double Coil Spring Lock Washer 3/4"	2	2218

ITEM NO.	DESCRIPTION	G37	
		QTY.	S/N
6	Pole Eye Plate, 36,000 lbs. Ultimate Tensile	2	1908
7	Machine Bolt, 7/8" x 16", 25,000 lbs. Ultimate Tensile	2	1901
11	Double Coil Spring Lock Washer 7/8"	2	2351

Clark Public Utilities

CONSTRUCTION STANDARDS

DOUBLE GUY ATTACHMENTS

REVISIONS

R	DATE	ENGR	OPS
1	2/24/11	CM	AH

PAGE: 2 of 2

G30-G37

CAD FILE: G30

APP: GGW

DATE: 4/1/85

SECTION 700

G40

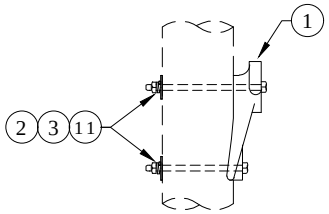

G41

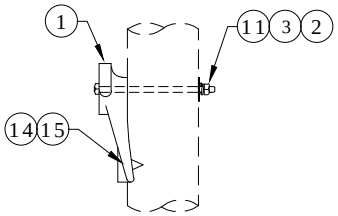

Note: For a head guy, turn attachment upside down.

G42
G43

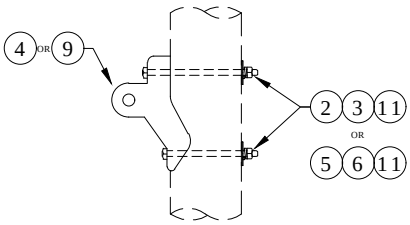

G45

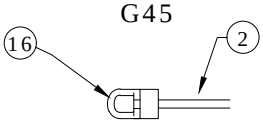

Note: Only for bridle and light span guys.

Rev. 2 - Corrected material issues and drawings, added "single" to title, obsoleted G44, and added G45.

ITEM NO.	DESCRIPTION	G40 QTY.	G40 S/N
1	Guy Hook, 25,400 lbs. Ultimate Tensile	1	753
2	Machine Bolt, 3/4" x 14", 18,350 lbs. Ultimate Tensile	2	174
3	Curved Washer, Cast, 4" x 4"	2	1910
11	Double Coil Spring Lock Washer 3/4"	2	2218

ITEM NO.	DESCRIPTION	G41 QTY.	G41 S/N
1	Guy Hook, 25,400 lbs. Ultimate Tensile	1	753
2	Machine Bolt, 3/4" x 14", 18,350 lbs. Ultimate Tensile	1	174
3	Curved Washer, Cast, 4" x 4"	1	1910
11	Double Coil Spring Lock Washer 3/4"	1	2218
14	1/2" x 4 1/2" Lag Screw	1	1132
15	1/2" Flat Round Washer	1	1394

ITEM NO.	DESCRIPTION	G42 QTY.	G42 S/N
2	Machine Bolt, 3/4" x 14", 18,350 lbs. Ultimate Tensile	2	174
3	Curved Washer, Cast, 4" x 4"	2	1910
4	Pole Eye Plate, 21,000 lbs. Ultimate Tensile	1	988
11	Double Coil Spring Lock Washer 3/4"	2	2218

ITEM NO.	DESCRIPTION	G43 QTY.	G43 S/N
5	Machine Bolt, 7/8" x 14", 25,400 lbs. Ultimate Tensile	2	1900
6	Curved Washer, Cast, 4" x 6"	2	1911
9	Pole Eye Plate, Heavy 36,000 lbs. Ultimate Tensile	1	1908
13	Double Coil Spring Lock Washer 7/8"	2	2351

ITEM NO.	DESCRIPTION	G45 QTY.	G45 S/N
2	Machine Bolt, 3/4" x 14", 18,350 lbs. Ultimate Tensile	1	174
16	Eyelet, 3/4" Gav., 18,350 lbs. Ultimate Tensile	1	1647

Clark Public Utilities

CONSTRUCTION STANDARDS

SINGLE GUY ATTACHMENTS

REVISIONS

R	DATE	ENGR	OPS
1	2/23/00	HWH	MA
2	2/24/11	CM	AH

PAGE: 1 of 1

G40-G45

CAD FILE: G40

APP: GGW

DATE: 4/1/86

SECTION 700

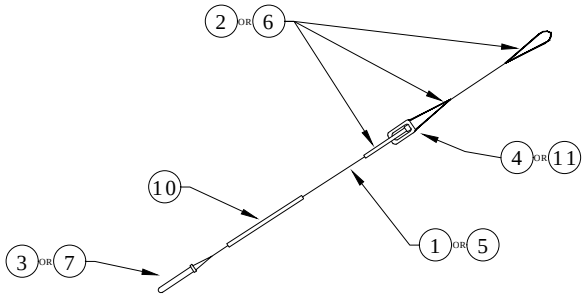

GDG 50
GDG 51

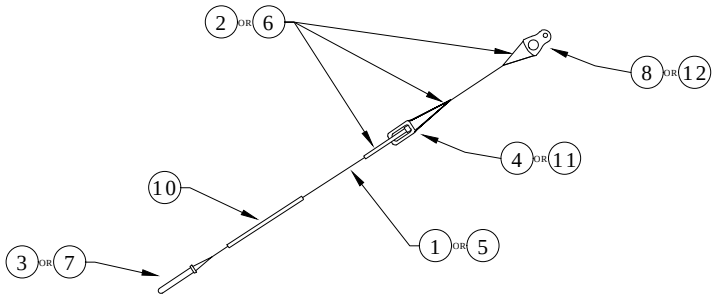

GDG 52
GDG 53

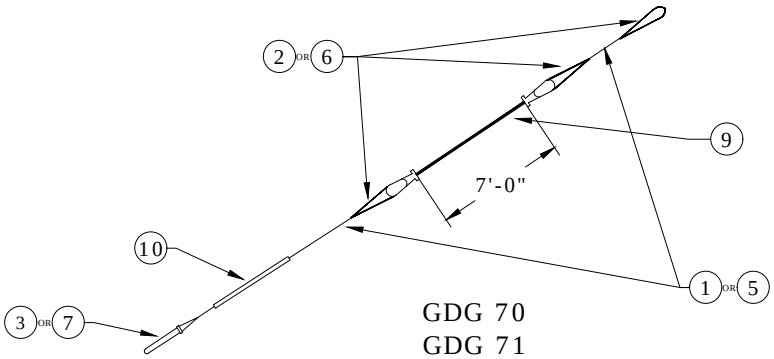

GDG 70
GDG 71

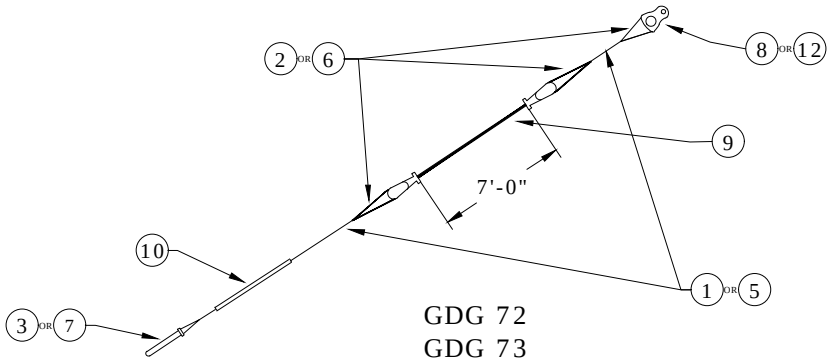

GDG 72
GDG 73

Rev. 1 - Removed uninsulated guys (GDG60-63), and corrected drawings and material issue.

Clark Public Utilities

CONSTRUCTION STANDARDS

DOWN GUYS

REVISIONS			
R	DATE	ENGR	OPS
1	2/24/11	CM	AH

PAGE:		CAD FILE:	APP: GGW	SECTION
1 of 3	GDG50 - GDG81	GDG50	DATE: 4/1/86	700

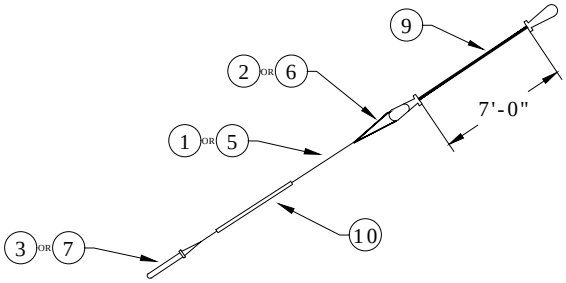

GDG 80
GDG 81

Notes:

1. If more than one guy will be attached to one anchor, an additional long automatic guy grip must be called for:
   S/N 1190- 10M Long Auto Guy Grip
   S/N 1192- 18M Long Auto Guy Grip
2. 3' and 10' Fiberglass Strain Insulators must be called for separately:
   S/N 776- 3' Fiberglass Strain Insulator
   S/N 1678- 10' Fiberglass Strain Insulator

Rev. 1 - Removed uninsulated guys (GDG60-63), and corrected drawings and material issue.

ITEM NO.	DESCRIPTION	GDG50	
		QTY.	S/N
1	Guy Wire, 10M	45ft	1419
2	Guy Grip, 10M, Preformed	3	713
3	Guy Grip, 10M, Automatic, Short	1	1189
4	Insulator, Guy Strain Small, 12,000 lbs. Ultimate, ANSI 54-2	1	780
10	Marker, Guy 8' Yellow	1	1061

ITEM NO.	DESCRIPTION	GDG51	
		QTY.	S/N
5	Guy Wire, 18M	45ft	1420
6	Guy Grip, 18M, Preformed	3	714
7	Guy Grip, 18M, Automatic, Short	1	1191
10	Marker, Guy 8' Yellow	1	1061
11	Insulator, Guy Strain Large, 20,000 lbs. Ultimate, ANSI 54-3	1	781

ITEM NO.	DESCRIPTION	GDG52	
		QTY.	S/N
1	Guy Wire, 10M	45ft	1419
2	Guy Grip, 10M, Preformed	3	713
3	Guy Grip, 10M, Automatic, Short	1	1189
4	Insulator, Guy Strain Small, 12,000 lbs. Ultimate, ANSI 54-2	1	780
8	Clevis, Thimble 1 1/4"	1	1628
10	Marker, Guy 8' Yellow	1	1061

ITEM NO.	DESCRIPTION	GDG53	
		QTY.	S/N
5	Guy Wire, 18M	45ft	1420
6	Guy Grip, 18M, Preformed	3	714
7	Guy Grip, 18M, Automatic, Short	1	1191
10	Marker, Guy 8' Yellow	1	1061
11	Insulator, Guy Strain Large, 20,000 lbs. Ultimate, ANSI 54-3	1	781
12	Clevis, Thimble 2 1/4"	1	1912

Clark Public Utilities

CONSTRUCTION STANDARDS

DOWN GUYS

REVISIONS

R	DATE	ENGR	OPS
1	2/24/11	CM	AH

PAGE: 2 of 3

GDG50 - GDG81

CAD FILE: GDG50

APP: GGW
DATE: 4/1/86

SECTION 700

Rev. 1 - Removed uninsulated guys (GDG60-63), and corrected drawings and material issue.

ITEM NO.	DESCRIPTION	GDG70 QTY.	GDG70 S/N
1	Guy Wire, 10M	45ft	1419
2	Guy Grip, 10M, Preformed	3	713
3	Guy Grip, 10M, Automatic, Short	1	1189
9	Insulator, Fiberglass, 2 Wheel, 7', 21,000 lbs. Ultimate, 530kV Wet Flashover	1	778
10	Marker, Guy 8' Yellow	1	1061

ITEM NO.	DESCRIPTION	GDG71 QTY.	GDG71 S/N
5	Guy Wire, 18M	45ft	1420
6	Guy Grip, 18M, Preformed	3	714
7	Guy Grip, 18M, Automatic, Short	1	1191
9	Insulator, Fiberglass, 2 Wheel, 7', 21,000 lbs. Ultimate, 530kV Wet Flashover	1	778
10	Marker, Guy 8' Yellow	1	1061

ITEM NO.	DESCRIPTION	GDG72 QTY.	GDG72 S/N
1	Guy Wire, 10M	45ft	1419
2	Guy Grip, 10M, Preformed	3	713
3	Guy Grip, 10M, Automatic, Short	1	1189
9	Insulator, Fiberglass, 2 Wheel, 7', 21,000 lbs. Ultimate, 530kV Wet Flashover	1	778
10	Marker, Guy 8' Yellow	1	1061
12	Clevis, Thimble, 2 1/4" Diameter	1	1912

ITEM NO.	DESCRIPTION	GDG73 QTY.	GDG73 S/N
5	Guy Wire, 18M	45ft	1420
6	Guy Grip, 18M, Preformed	3	714
7	Guy Grip, 18M, Automatic, Short	1	1191
9	Insulator, Fiberglass, 2 Wheel, 7', 21,000 lbs. Ultimate, 530kV Wet Flashover	1	778
10	Marker, Guy 8' Yellow	1	1061
12	Clevis, Thimble, 2 1/4" Diameter	1	1912

ITEM NO.	DESCRIPTION	GDG80 QTY.	GDG80 S/N
1	Guy Wire, 10M	45ft	1419
2	Guy Grip, 10M, Preformed	1	713
3	Guy Grip, 10M, Automatic, Short	1	1189
9	Insulator, Fiberglass, 2 Wheel, 7', 21,000 lbs. Ultimate, 530kV Wet Flashover	1	778
10	Marker, Guy 8' Yellow	1	1061

ITEM NO.	DESCRIPTION	GDG81 QTY.	GDG81 S/N
5	Guy Wire, 18M	45ft	1420
6	Guy Grip, 18M, Preformed	1	714
7	Guy Grip, 18M, Automatic, Short	1	1191
9	Insulator, Fiberglass, 2 Wheel, 7', 21,000 lbs. Ultimate, 530kV Wet Flashover	1	778
10	Marker, Guy 8' Yellow	1	1061

Clark Public Utilities

CONSTRUCTION STANDARDS

DOWN GUYS

REVISIONS

R	DATE	ENGR	OPS
1	2/24/11	CM	AH

PAGE: 3 of 3

GDG50 - GDG81

CAD FILE: GDG50

APP: GGW

DATE: 4/1/86

SECTION 700

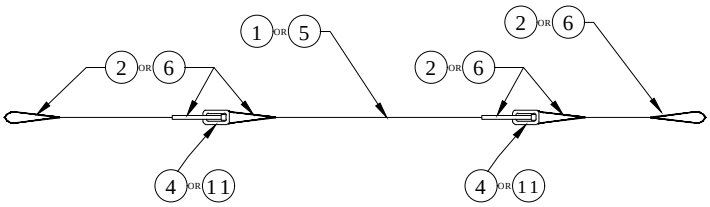

GSG 50
GSG 51

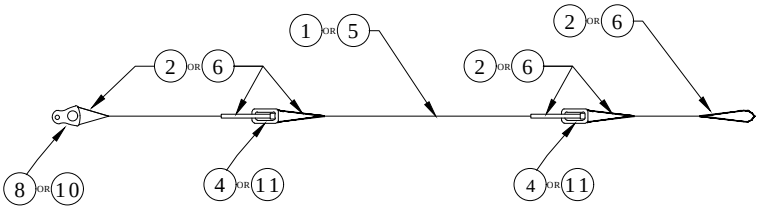

GSG 52
GSG 53

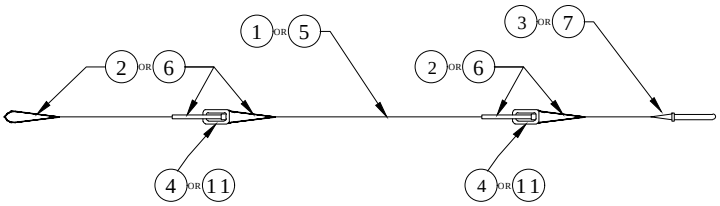

GSG 54
GSG 55

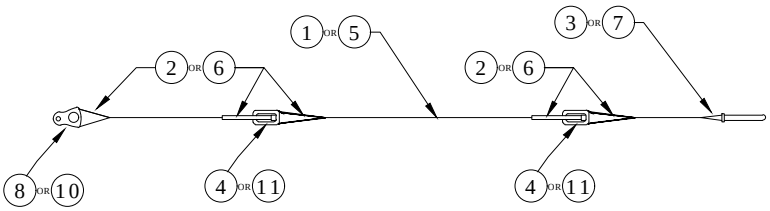

GSG 56
GSG 57

Rev. 1 - Obsoleted GSG60 to GSG63, added GSG54 to GSG57, and corrected drawings and material lists.

Clark Public Utilities

CONSTRUCTION STANDARDS

SPAN GUYS

REVISIONS			
R	DATE	ENGR	OPS
1	2/24/11	CM	AH

PAGE: 1 of 4

GSG50 - GSG85

CAD FILE: GSG50

APP: GGW

DATE: 4/1/86

SECTION 700

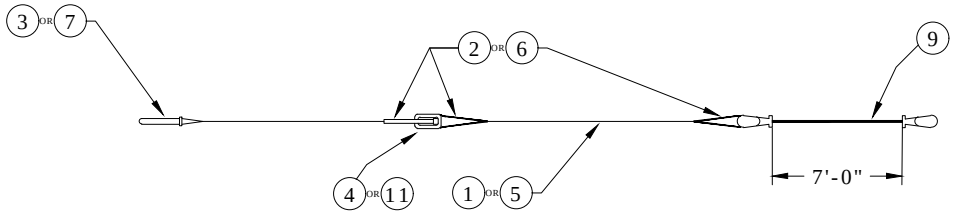

GSG 70
GSG 71

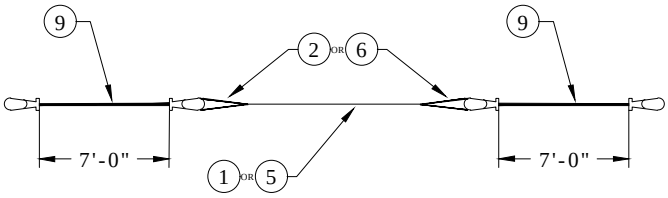

GSG 82
GSG 83

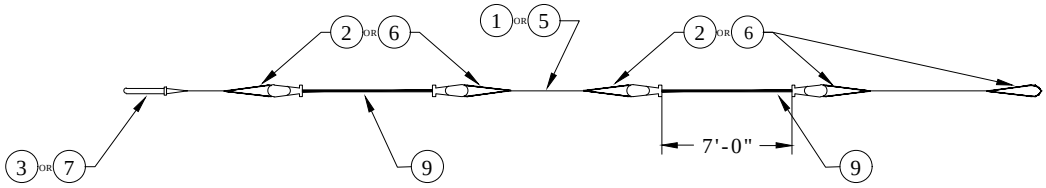

GSG 84
GSG 85

Note:

3' and 10' Fiberglass Strain Insulators must be called for separately:
S/N 776- 3' Fiberglass Strain Insulator
S/N 1678- 10' Fiberglass Strain Insulator

Rev. 1 - Obsoleted GSG60 to GSG63, added GSG54 to GSG57, and corrected drawings and material lists.

Clark Public Utilities

CONSTRUCTION STANDARDS

SPAN GUYS

REVISIONS

R	DATE	ENGR	OPS
1	2/24/11	CM	AH

PAGE: 2 of 4

GSG50 - GSG85

CAD FILE: GSG50

APP: GGW
DATE: 4/1/86

SECTION 700

Rev. 1 - Obsoleted GSG60 to GSG63, added GSG54 to GSG57, and corrected drawings and material lists.

ITEM NO.	DESCRIPTION	GSG50	
		QTY.	S/N
1	Guy Wire, 10M	150ft	1419
2	Guy Grip, 10M, Preformed	6	713
4	Insulator, Guy Strain, Small, 12,000 lbs. Ultimate, ANSI 54-2	2	780

ITEM NO.	DESCRIPTION	GSG51	
		QTY.	S/N
5	Guy Grip, 18M	150ft	1420
6	Guy Grip, 18M, Preformed	6	714
11	Insulator, Guy Strain, Large, 20,000 lbs. Ultimate, ANSI 54-3	2	781

ITEM NO.	DESCRIPTION	GSG52	
		QTY.	S/N
1	Guy Wire, 10M	150ft	1419
2	Guy Grip, 10M, Preformed	6	713
4	Insulator, Guy Strain, Small, 12,000 lbs. Ultimate, ANSI 54-2	2	780
10	Clevis, Thimble, 1 1/4" Diameter	1	1628

ITEM NO.	DESCRIPTION	GSG53	
		QTY.	S/N
5	Guy Grip, 18M	150ft	1420
6	Guy Grip, 18M, Preformed	6	714
8	Clevis, Thimble, 2 1/4" Diameter	1	1912
11	Insulator, Guy Strain, Large, 20,000 lbs. Ultimate, ANSI 54-3	2	781

ITEM NO.	DESCRIPTION	GSG54	
		QTY.	S/N
1	Guy Wire, 10M	150ft	1419
2	Guy Grip, 10M, Preformed	5	713
3	Guy Grip, 10M, Automatic, Long	1	1190
4	Insulator, Guy Strain, Small, 12,000 lbs. Ultimate, ANSI 54-2	2	780

ITEM NO.	DESCRIPTION	GSG55	
		QTY.	S/N
5	Guy Grip, 18M	150ft	1420
6	Guy Grip, 18M, Preformed	5	714
7	Guy Grip, 18M, Automatic, Long	1	1192
11	Insulator, Guy Strain, Large, 20,000 lbs. Ultimate, ANSI 54-3	2	781

ITEM NO.	DESCRIPTION	GSG56	
		QTY.	S/N
1	Guy Wire, 10M	150ft	1419
2	Guy Grip, 10M, Preformed	5	713
3	Guy Grip, 10M, Automatic, Long	1	1190
4	Insulator, Guy Strain, Small, 12,000 lbs. Ultimate, ANSI 54-2	2	780
10	Clevis, Thimble, 1 1/4" Diameter	1	1628

ITEM NO.	DESCRIPTION	GSG57	
		QTY.	S/N
5	Guy Grip, 18M	150ft	1420
6	Guy Grip, 18M, Preformed	5	714
7	Guy Grip, 18M, Automatic, Long	1	1192
8	Clevis, Thimble, 2 1/4" Diameter	1	1912
11	Insulator, Guy Strain, Large, 20,000 lbs. Ultimate, ANSI 54-3	2	781

Clark Public Utilities

CONSTRUCTION STANDARDS

SPAN GUYS

REVISIONS

R	DATE	ENGR	OPS
1	2/24/11	CM	AH

PAGE: 3 of 4

GSG50 - GSG85

CAD FILE: GSG50

APP: GGW

DATE: 4/1/86

SECTION 700

Rev. 1 - Obsoleted GSG60 to GSG63, added GSG54 to GSG57, and corrected drawings and material lists.

ITEM NO.	DESCRIPTION	GSG70	
		QTY.	S/N
1	Guy Wire, 10M	150ft	1419
2	Guy Grip, 10M, Preformed	3	713
3	Guy Grip, 10M, Automatic, Long	1	1190
4	Insulator, Guy Strain, Small, 12,000 lbs. Ultimate, ANSI 54-2	1	780
9	Insulator, Fiberglass, 2 Wheel, 7', 21,000 lbs. Ultimate, 530kV Wet Flashover	1	778

ITEM NO.	DESCRIPTION	GSG71	
		QTY.	S/N
5	Guy Grip, 18M	150ft	1420
6	Guy Grip, 18M, Preformed	3	714
7	Guy Grip, 18M, Automatic, Long	1	1192
9	Insulator, Fiberglass, 2 Wheel, 7', 21,000 lbs. Ultimate, 530kV Wet Flashover	1	778
11	Insulator, Guy Strain, Large, 20,000 lbs. Ultimate, ANSI 54-3	1	781

ITEM NO.	DESCRIPTION	GSG82	
		QTY.	S/N
1	Guy Wire, 10M	150ft	1419
2	Guy Grip, 10M, Preformed	2	713
9	Insulator, Fiberglass, 2 Wheel, 7', 21,000 lbs. Ultimate, 530kV Wet Flashover	2	778

ITEM NO.	DESCRIPTION	GSG83	
		QTY.	S/N
5	Guy Grip, 18M	150ft	1420
6	Guy Grip, 18M, Preformed	2	714
9	Insulator, Fiberglass, 2 Wheel, 7', 21,000 lbs. Ultimate, 530kV Wet Flashover	2	778

ITEM NO.	DESCRIPTION	GSG84	
		QTY.	S/N
1	Guy Wire, 10M	150ft	1419
2	Guy Grip, 10M, Preformed	5	713
3	Guy Grip, 10M, Automatic, Long	1	1190
9	Insulator, Fiberglass, 2 Wheel, 7', 21,000 lbs. Ultimate, 530kV Wet Flashover	2	778

ITEM NO.	DESCRIPTION	GSG85	
		QTY.	S/N
5	Guy Grip, 18M	150ft	1420
6	Guy Grip, 18M, Preformed	5	714
7	Guy Grip, 18M, Automatic, Long	1	1192
9	Insulator, Fiberglass, 2 Wheel, 7', 21,000 lbs. Ultimate, 530kV Wet Flashover	2	778

Clark Public Utilities

CONSTRUCTION STANDARDS

SPAN GUYS

REVISIONS

R	DATE	ENGR	OPS
1	2/24/11	CM	AH

PAGE: 4 of 4

GSG50 - GSG85

CAD FILE: GSG50

APP: GGW

DATE: 4/1/86

SECTION 700

800
LINE DEVICES

2/11/2025

~	CA600	Capacitor Bank - 3 Units - 600kVAR
~	CF	Capacitor Fuse Schedule
~	CO1	Pole Mounting Bracket for Cutout & Lightning Arrester
~	CO3	Line Cutouts
~	CO100	Universal Cutout - 100 Amp
~	CO200	Universal Cutout - 200 Amp
~	OFI	Overhead Fault Indicators
N	R3	Three 1Ø Cutout-Mounted Reclosers Single Arm
~	R5	Three 1Ø Solid Dielectric Reclosers
~	R6	Three 1Ø Oil-Filled Reclosers
~	REG3	3Ø Regulator Installation
~	SW3	Pole Top Switch - Switch Number Location
~	SW6	3Ø Switch - Underslung - 900A

N New Standard
R Redrawn Standard
C Changed Standard
~ No Change

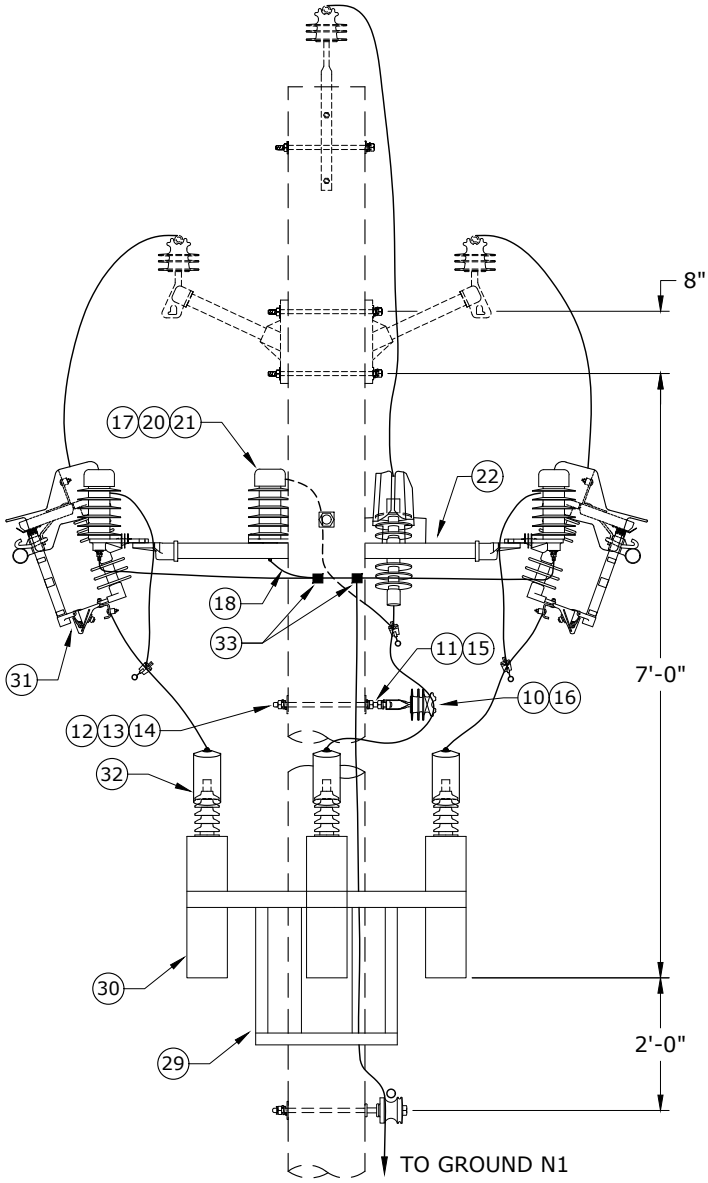

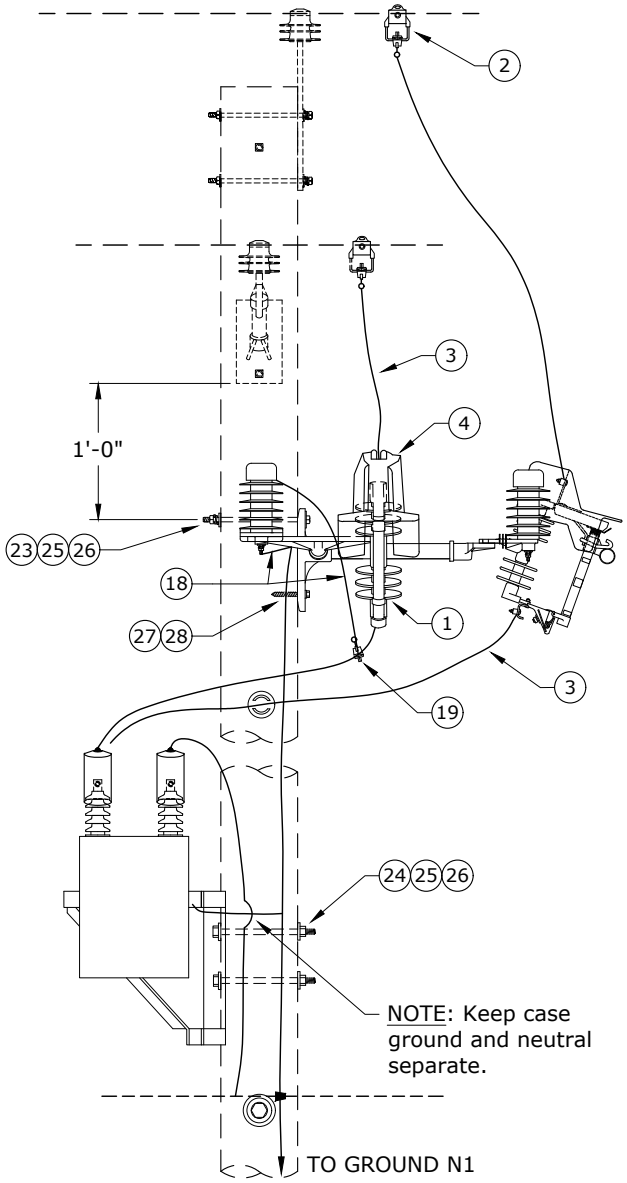

NOTE: Keep case ground and neutral separate.

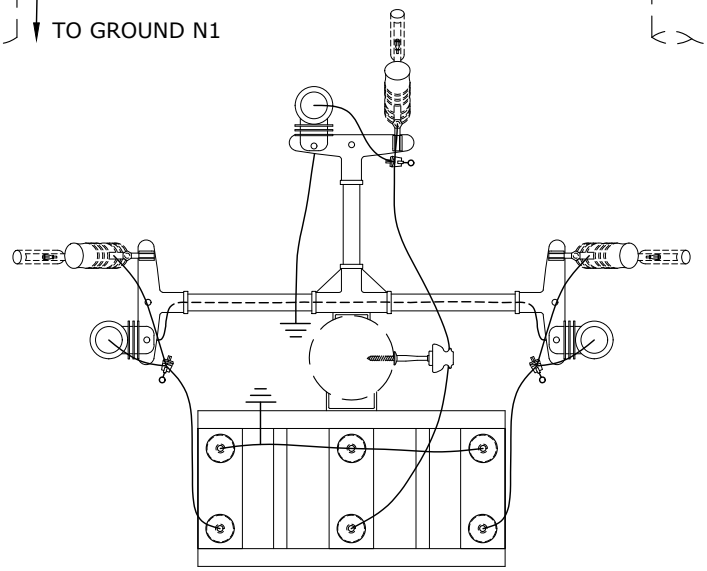

NOTE: Connect Arrester Grounds to Capacitor Mounting Bolts.

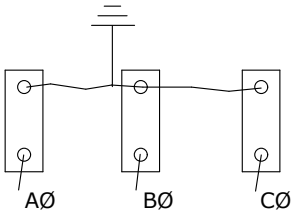

FOR Y SYSTEMS

Rev 4: Changed to polymer cutout and material corrections.

Clark Public Utilities

CONSTRUCTION STANDARDS

CAPACITOR BANK
3 UNITS
600 kVAR

REVISIONS

R	DATE	ENGR	OPS
1	2/23/00	HWH	MA
2	2/6/15	CM	DK
3	3/11/20	KJP	
4	8/13/21	KJP	

PAGE: 1 of 2

CA600

CAD FILE: CA600

APP: HWH/GW

DATE: 1/22/80

SECTION 800

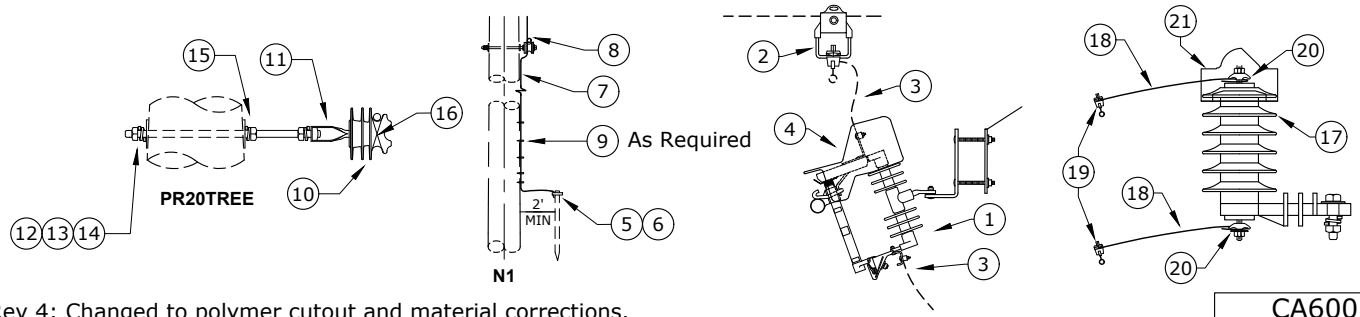

Rev 4: Changed to polymer cutout and material corrections.

ITEM NO.	DESCRIPTION	CA600 CO100 (3) QTY.	S/N
1	Cutout, Polymer, Universal, 100A, 16kA Asym	3	2532
2	Clamp, Hotline, GP1530, Line #6 Sol - 400MCM, Tap #6 Sol - 4/0 Str, Cu Only	3	284
3	Conductor, 600v, Cu, #4, 7-str, THW, Red	45	2512
4	Guard, Wildlife, Cutout, Polymer	3	2928

ITEM NO.	DESCRIPTION	N1 QTY.	S/N
5	Rod, Ground, 5/8" x 8'	1	1124
6	Clamp, Ground Rod, 5/8", Bronze, Small	1	281
7	Conductor, Cu-Clad Steel, #4 Cu Equiv	40	1512
8	Connector, H-Tap, Al/Cu, Run #2 - 2/0 Str, Tap #6 - #1 Str	1	413
9	Staple, Ground, Barbed, Galvanized, 1 1/2"	24	2707

ITEM NO.	DESCRIPTION	PR20TREE QTY.	S/N
10	Insulator, Pin, 15kV, C-Neck, Polymer	1	1968
11	Pin, Adapter	1	959
12	Washer, Curved, Square, Cast, 3" x 3" x 3/8" Thick x 13/16" Hole	2	1392
13	Bolt, Double Arm, 5/8" x 16" Galv, 12,400 lb Ultimate	1	81
14	Washer, Lock, Spring, Double Coil, Galv, 5/8"	1	2217
15	Washer, Lock, Spring, Single Coil, Galv, 5/8"	2	1403
16	Wire, Tie, Al, #4 Sol w/ 45mil TPR Jacket	11	3012

ITEM NO.	DESCRIPTION	LA2 (3) QTY.	S/N
17	Arrester, Surge, 9kV, MOV, Riser Pole	3	58
18	Conductor, 600v, Cu, #4, 7-Str, THW, Red, 1/C	21	2512
19	Clamp, Hotline GP 1520, Line & Tap #8 to 2/0 Str, Cu Only	6	283
20	Connector, Compression Lug, #4, Cu/Al, One-Hole, Tin-Plated, For Arrester	6	2548
21	Guard, Wildlife, Polymer Arrester	3	2583

ITEM NO.	DESCRIPTION	ADDITIONAL MATERIAL QTY.	S/N
22	Bracket, Arrester/Cutout, 3Ø, 18" Fiberglass	1	2538
23	Bolt, Machine, 5/8" x 12", Galv. 12,400 lbs. Ultimate	1	155
24	Bolt, Machine, 5/8" x 14", Galv. 12,400 lbs. Ultimate	2	156
25	Washer, Curved, Square, Cast, 3" x 3" x 3/8" Thick x 13/16" Hole	3	1392
26	Washer, Lock, Spring, Double Coil Galv. 5/8"	3	2217
27	Screw, Lag 1/2" x 4 1/2", Twist Drive, Drive Point	1	1132
28	Washer, Square Flat, 5/8" x 2 1/4" x 2 1/4"	1	1412
29	Hanger, Rack 3 Unit Capacitor	1	732
30	Capacitor, 200kVAR, 7.2kV	3	1530
31	Fuse, "ELF", 8.3kV, 30A	3	1543
32	Guard, Wildlife, Transformer Bushing	6	721
33	Connector, Crimpet, Cu, 4C4, Run & Tap #6 Sol - #4 Str	4	450

Clark Public Utilities

CONSTRUCTION STANDARDS

CAPACITOR BANK
3 UNITS
600 kVAR

REVISIONS

R	DATE	ENGR	OPS
1	2/23/00	HWH	MA
2	2/6/15	CM	DK
3	3/11/20	KJP	
4	8/13/21	KJP	

PAGE: 2 of 2

CA600

CAD FILE: CA600

APP: HWH/GW
DATE: 1/22/80

SECTION 800

CAPACITOR LINE CURRENT AND FUSE SCHEDULE

CAUTION: CAPACITORS MUST BE GROUNDED AFTER THEY ARE DE-ENERGIZED BECAUSE THEY WILL STAY CHARGED FOR A LONG TIME.

NEW BANKS

KVAR UNIT SIZE	7200 VOLTS		
	CURRENT PER PHASE	ELF FUSE	S/N
100	13.88	18A	1544
200	27.76	30A	1543

NOTE: "ELF" fuse is a combination expulsion and CLF that fits in a universal cutout. The fuse is made by Cooper.

OLD BANKS (INSTALLED PRIOR TO 2012)

KVAR UNIT SIZE	7200 VOLTS		
	CURRENT PER PHASE	EXPULSION FUSE	CURRENT LIMITING FUSE
100	13.88	15A	25A
200	27.76	25A	40A

Rev 1: Changed to "ELF" fuse from expulsion & CLF.

Clark Public Utilities

CONSTRUCTION STANDARDS

CAPACITOR FUSE SCHEDULE

REVISIONS

R	DATE	ENGR	OPS
1	2/6/15	CM	DK

PAGE: 1 of 1

CF

CAD FILE: CF

APP:

DATE:

SECTION 800

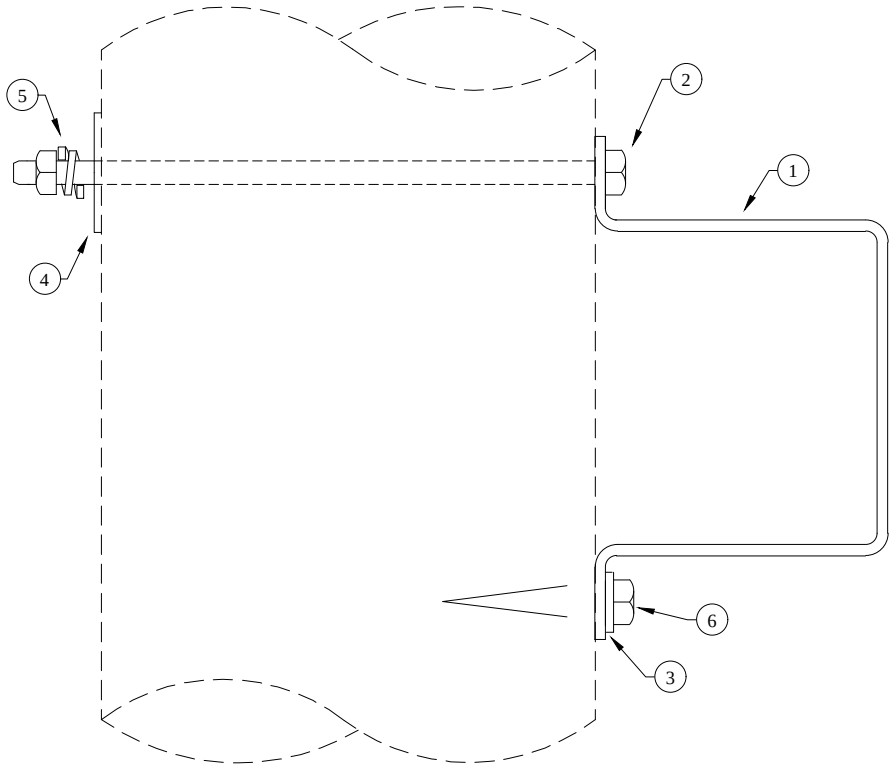

ITEM NO.	DESCRIPTION	CO1 QTY.	CO1 S/N
1	Bracket, Pole Mount, Cutout	1	219
2	Bolt, Machine 5/8" x 10" Galv.	1	154
3	Washer, Flat Round Galv. 1/2"	1	1394
4	Washer, Square Flat 5/8" x 2 1/4" x 2 1/4"	1	1412
5	Washer, Double Ring 5/8"	1	2217
6	Screw, Lag 1/2" x 3" Drive Point	1	1131

Clark Public Utilities

CONSTRUCTION STANDARDS

POLE MOUNTING BRACKET FOR
CUTOUT & LIGHTNING ARRESTOR

REVISIONS

R	DATE	ENGR	OPS
1	3/02		

1 REDRAWN IN CAD

PAGE: 1 of 1

CO1

CAD FILE: CO1

APP: ELM

DATE: 1/31/80

SECTION 800

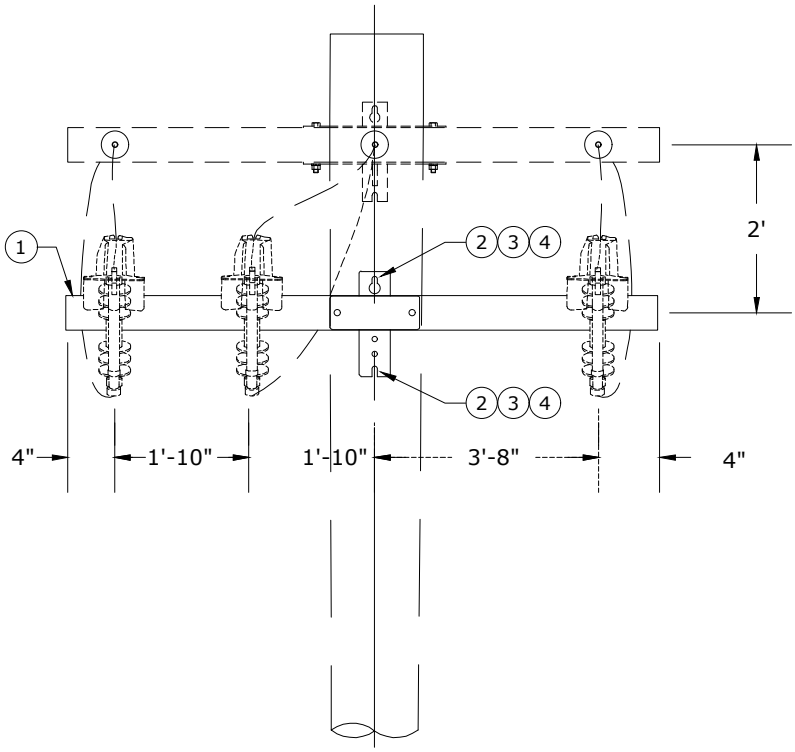

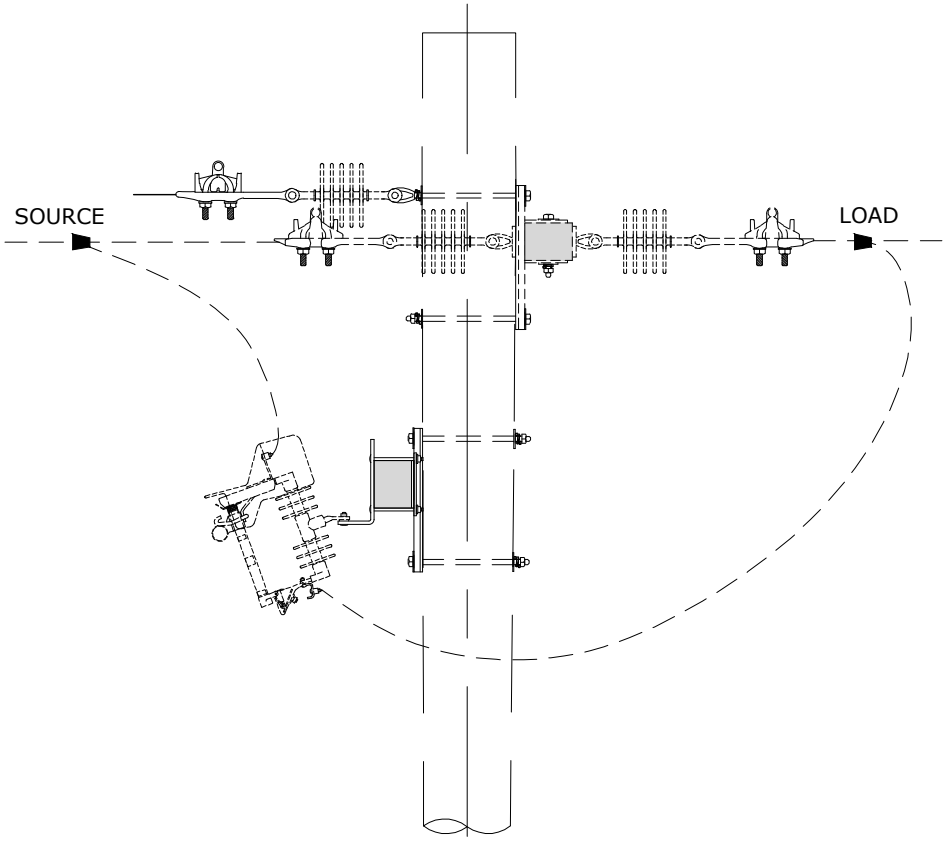

NOTE: Call for cutouts separately

Rev 2: Updated drawing to polymer cutouts, fiberglass crossarm, and material issue.

ITEM NO	DESCRIPTION	CO3 QTY	CO3 S/N
1	Crossarm, Distribution, Fiberglass, 8' Long x 3-5/8" Wide x 4-5/8" High	1	3030✲
2	Bolt, Machine, 5/8" x 14", Galv., 12,400 lb Ultimate Tensile	2✲	156 ✲
3	Washer, Lock, Spring, Double Coil, Galv., 5/8"	2 ✲	2217
4	Washer, Curved, Square, Cast, 3" x 3" x 3/8" Thick x 13/16" Hole	2 ✲	1392

Clark Public Utilities

CONSTRUCTION STANDARDS

LINE CUTOUTS

REVISIONS

R	DATE	ENGR	OPS
1	8/25/09	CM	AH
2	12/19/22	CRM	GM

PAGE: 1 of 1

CO3

CAD FILE: CO3

APP: HWH/GW

DATE: 1/22/80

SECTION 800

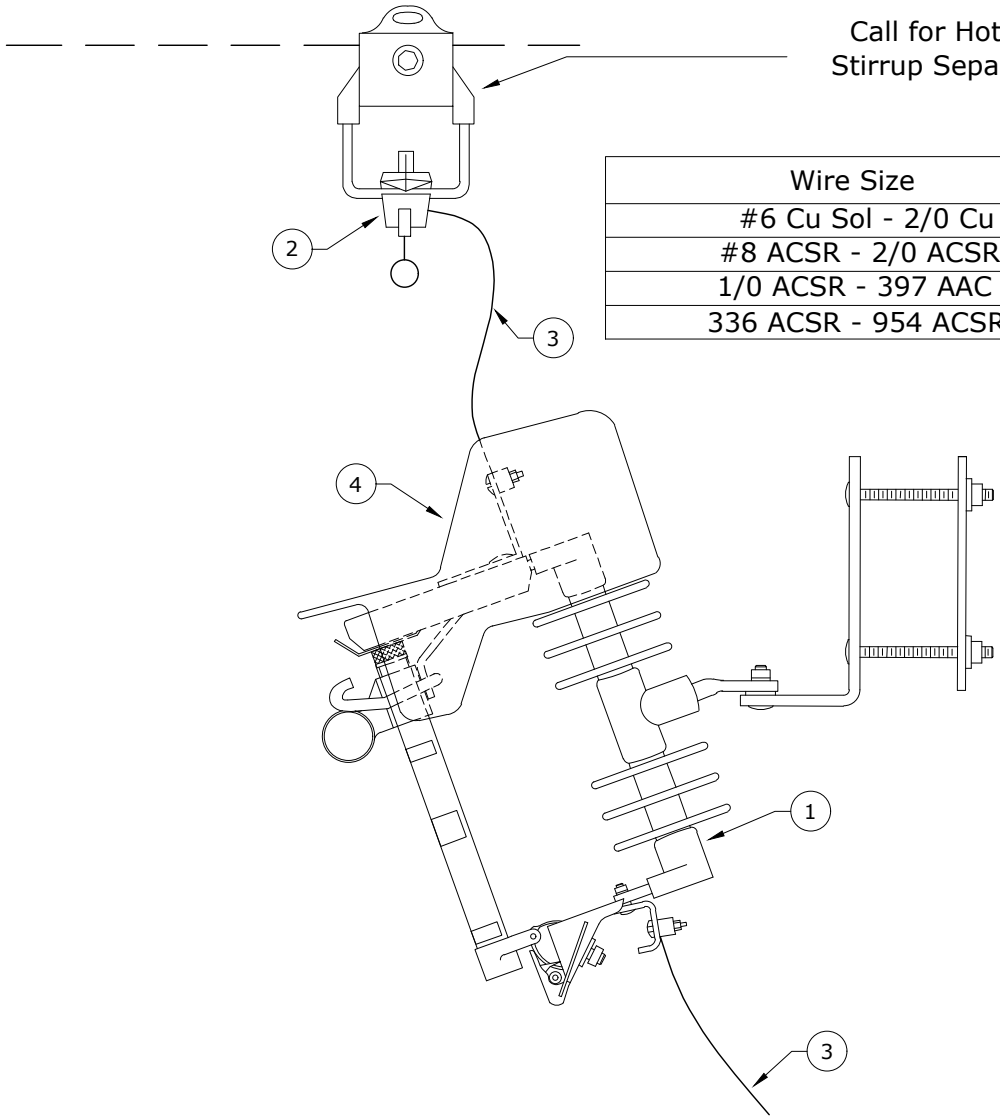

Wire Size	Bail Size	S/N
#6 Cu Sol - 2/0 Cu	#1 Cu	2338
#8 ACSR - 2/0 ACSR	#1 Cu	2339
1/0 ACSR - 397 AAC	1/0 Cu	2340
336 ACSR - 954 ACSR	2/0 Cu	2341

Notes:

1. This cutout is rated up to 100 A.
2. For loads greater than 100 A use Std CO200 - Universal Cutout 200 A.
3. By replacing the tube with a slug (solid blade S/N 2168) this cutout becomes an unfused 300 A disconnect.
4. The Loadbuster tool will allow interruption of currents up to 900 A.
5. A linkbreak door (S/N 2533) is available for locations that prevent use of the Loadbuster tool for loads up to 100 A.

Rev. 3 - Change from porcelain to polymer cutout, and changed red wire to black RHW-2.

ITEM NO.	DESCRIPTION	CO100	
		QTY.	S/N
1	Cutout, Polymer, Universal, 100A, 16kA Asymetrical	1	2532 ✲
2	Clamp, Hot Line, GP1520, Line #8 Sol-2/0 Str, Tap #8 Sol-2/0 Str, Cu Only	1	283
3	Conductor, OH, 600V, Cu, #4, 7-Str, XLPE, 60 mil, Soft-drawn, 1C, RHW-2	15	391 ✲
4	Guard, Wildlife, Cutout, Polymer	1	2928 ✲

Clark Public Utilities

CONSTRUCTION STANDARDS

UNIVERSAL CUTOUT
100 AMP

REVISIONS

R	DATE	ENGR	OPS
1	2/23/00	Redrawn	in CAD
2	8/25/09	CM	AH
3	12/2/22	KJP	

PAGE: 1 of 1

CO100

CAD FILE: xCO100

APP: HWH/GW
DATE: 1/31/80

SECTION 800

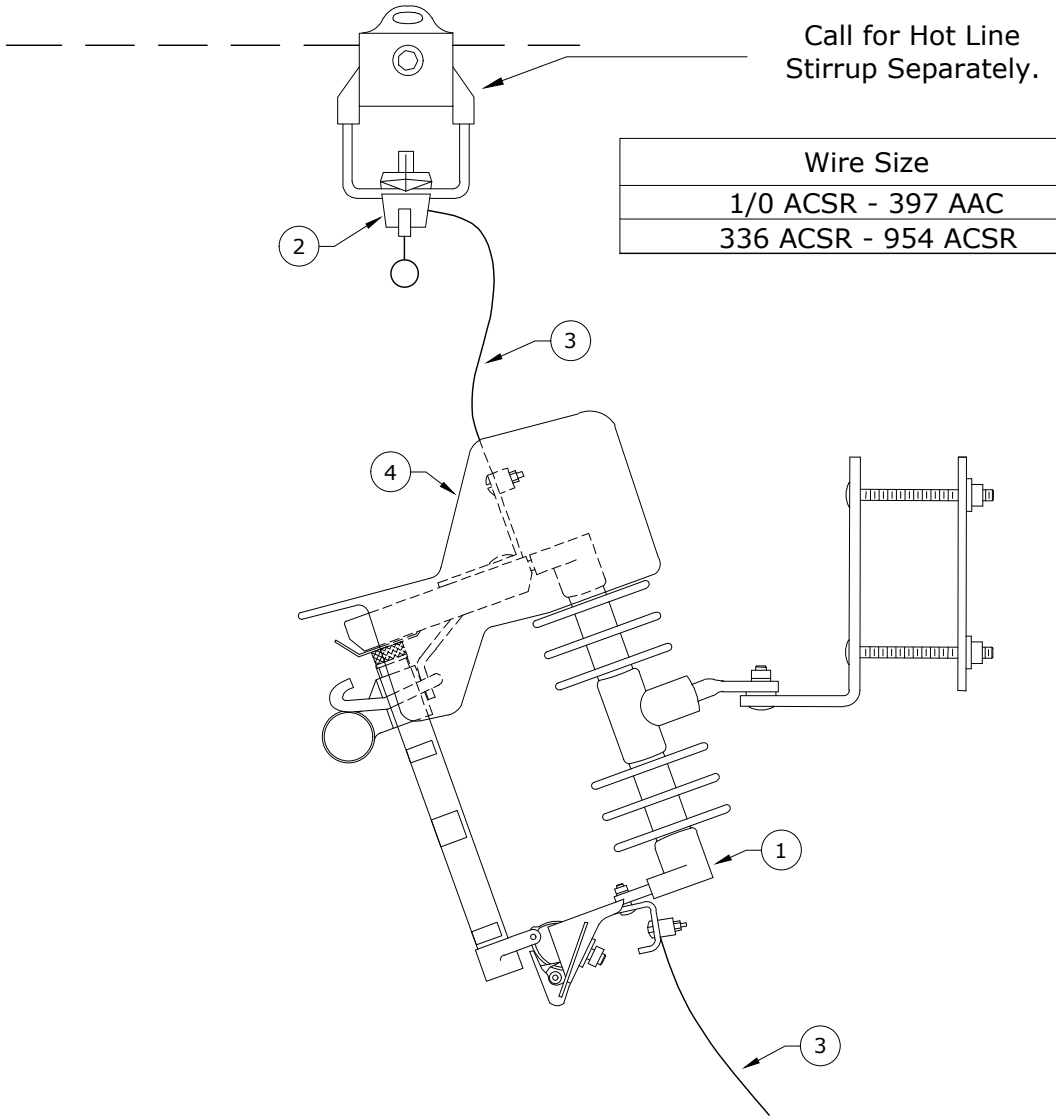

Wire Size	Bail Size	S/N
1/0 ACSR - 397 AAC	1/0 Cu	2340
336 ACSR - 954 ACSR	2/0 Cu	2341

Notes:

1. This cutout is for use in any application requiring 125 A or larger fuses.
2. This cutout is limited to 12,000 A AIC. Contact Systems Engineering before installing within 1,000 feet of a substation.
3. The loadbuster tool will allow interruptions of currents up to 900 A.

Rev. 3 - Change from porcelain to polymer cutout, and changed red wire to black RHW-2.

ITEM NO.	DESCRIPTION	CO200	
		QTY.	S/N
1	Cutout, Polymer, Universal, 200A, 12kA Asymmetrical	1	1906
2	Clamp, Hotline, GP1520, Line #8 Sol-2/0 Str, Tap #8 Sol-2/0 Str, Cu Only	1	283
3	Conductor OH, 600v, Cu 2/0, 19-str, XLPE, 80 mil, Soft-drawn, 1C, RHW-2	15	381☼
4	Guard, Wildlife, Cutout, Polymer	1	2928☼

Clark Public Utilities

CONSTRUCTION STANDARDS

UNIVERSAL CUTOUT
200 AMP

REVISIONS

R	DATE	ENGR	OPS
1	2/23/00	Redrawn	in CAD
2	8/25/09	CM	AH
3	12/2/22	KJP	

PAGE: 1 of 1

CO200

CAD FILE: xCO200

APP: GGW/RWG
DATE: 4/92

SECTION 800

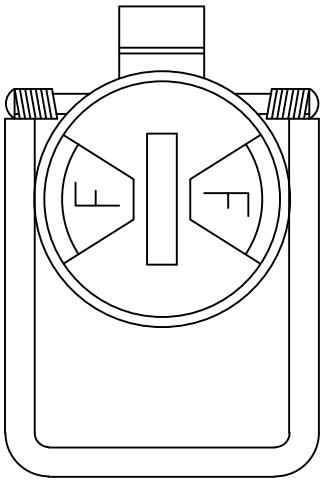

FRONT VIEW

USE: OFF-ROAD LINES, RECLOSERS, UG DIPS, AND WHEREVER NEEDED

TRIP CURRENT: 400A

RESET VOLTAGE AND TIME: 5KV (UP TO 5 MIN.)

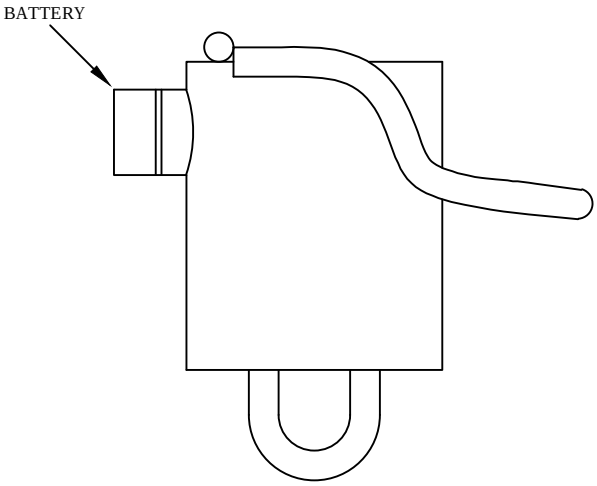

SIDE VIEW

Rev 1: Corrected reset voltage and time.

ITEM NO.	DESCRIPTION	UFI1800 QTY.	UFI1800 S/N
1	OVERHEAD FAULT INDICATOR, CURRENT RESET, 400A TRIP	1	2558

Clark Public Utilities

CONSTRUCTION STANDARDS

OVERHEAD
FAULT INDICATORS

REVISIONS

R	DATE	ENGR	OPS
1	2/15/10	KJP	

PAGE: 1 of 1

OFI

CAD FILE: OFI

APP:

DATE:

SECTION 800

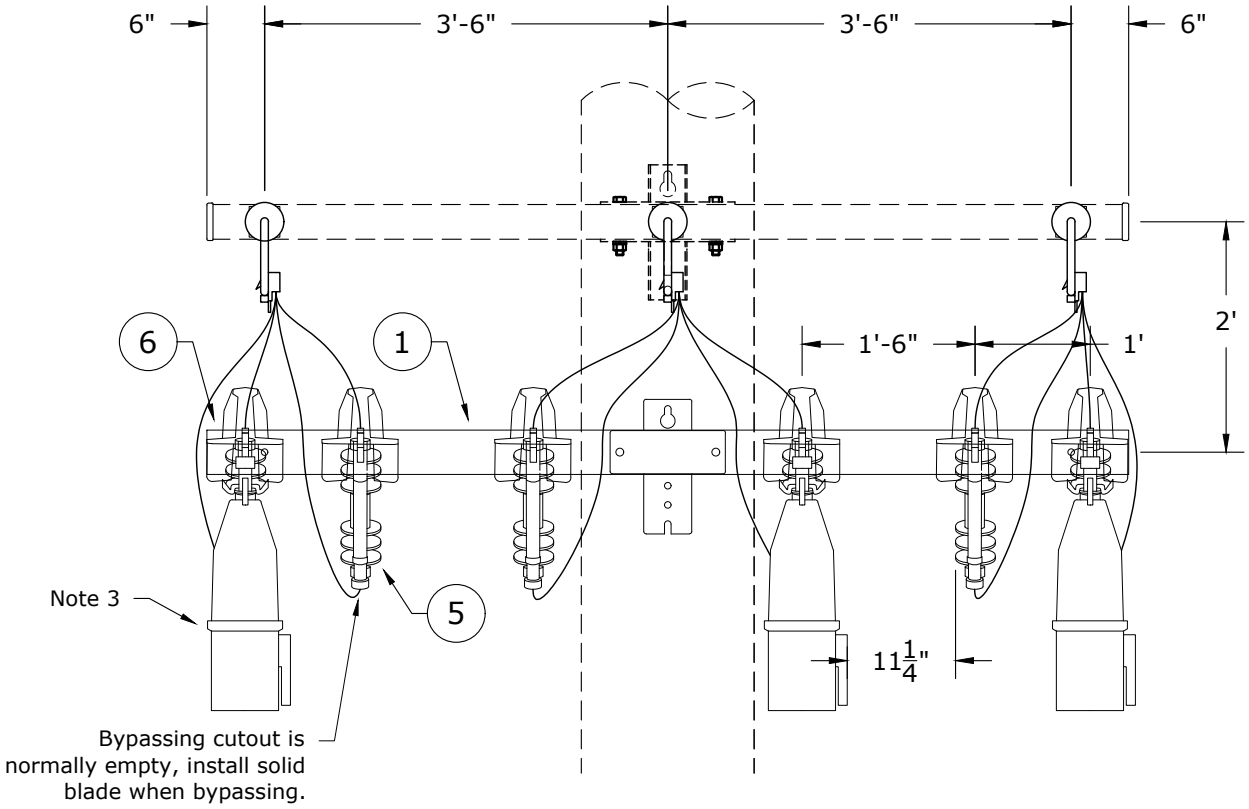

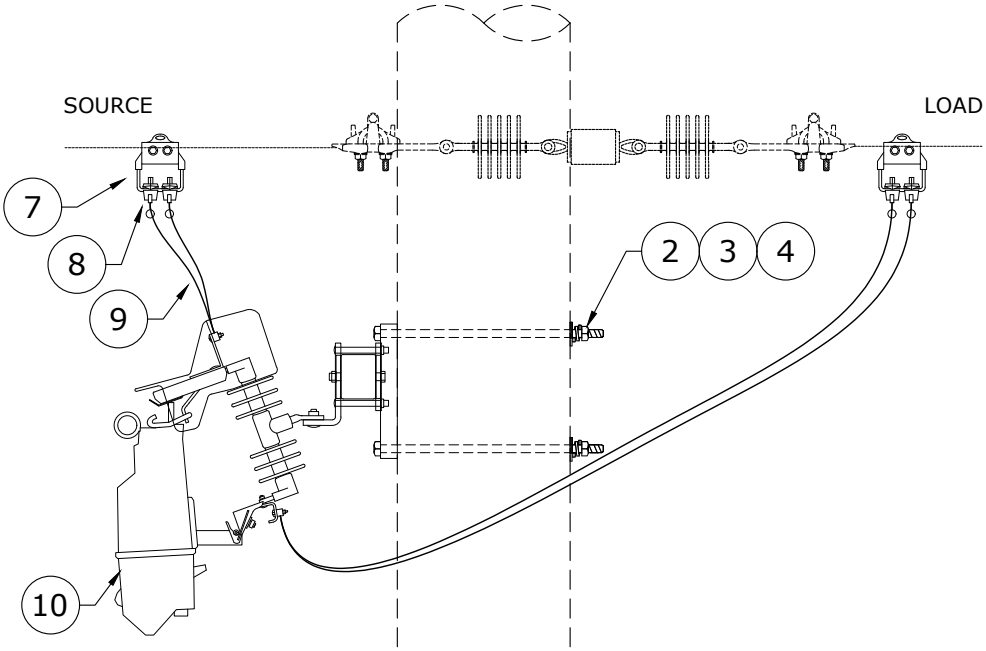

Notes:

1. Contact System Engineering prior to installation to program the recloser's trip level.
2. Engineer to call for stirrups on copper wire or aluminum wire smaller than 2/0 ACSR.

Rev. 0 - Reserved for future revs.

Clark Public Utilities

CONSTRUCTION STANDARDS

THREE 1ø
CUTOUT-MOUNTED RECLOSERS
SINGLE ARM

REVISIONS			
R	DATE	ENGR	OPS
	2/11/25	CM	GM

PAGE: 1 of 2

R3

CAD FILE: R3

APP: DRAFT
DATE: 10/8/21

SECTION 800

ITEM NO.	DESCRIPTION	R3 (100A) QTY.	R3 (100A) S/N	R3A (200A) QTY.	R3A (200A) S/N
1	Crossarm, Distribution, Fiberglass, 8' Long x 3-5/8" Thick X 4-5/8" High	1	3030	1	3030
2	Bolt, Machine, 3/4" x 14", Galv., 18,350 lbs Ultimate Tensile	2	174	2	174
3	Washer, Lock, Spring, Double Coil, Galv., 3/4"	2	2218	2	2218
4	Washer, Curved, Square, Cast, 3" x 3" x 3/8" Thick x 13/16" Hole	2	1392	2	1392
5	Cutout, Polymer, Universal, 100 A, 16 kA Asymm	3	2532	3	2532
6	Guard, Wildlife, Cutout, Polymer	6	2928	6	2928
7	Clamp, Hotline Stirrup, Line 1/0 ACSR - 397 AAC, Bail 1/0 (2 Eyebolts)	6	2340	6	2340
8	Clamp, Hotline GP 1530 Line #6Sol - 400MCM, Tap #6Sol - 4/0Str, Cu Only	12	284	12	284
9	Cond, Cu 2/0 1C 600V USE XLP19 Str	75	381	75	381
10	Recloser, Vac, 1 Ph, 100A/200A, W/Universal Cutout	3	2717	3	2967

Clark Public Utilities

CONSTRUCTION STANDARDS

THREE 1ø
CUTOUT-MOUNTED RECLOSERS
SINGLE ARM

REVISIONS

R	DATE	ENGR	OPS
0	2/11/25	CM	GM

PAGE: 2 of 2

R3

CAD FILE: R3

APP: DRAFT
DATE: 10/8/21

SECTION 800

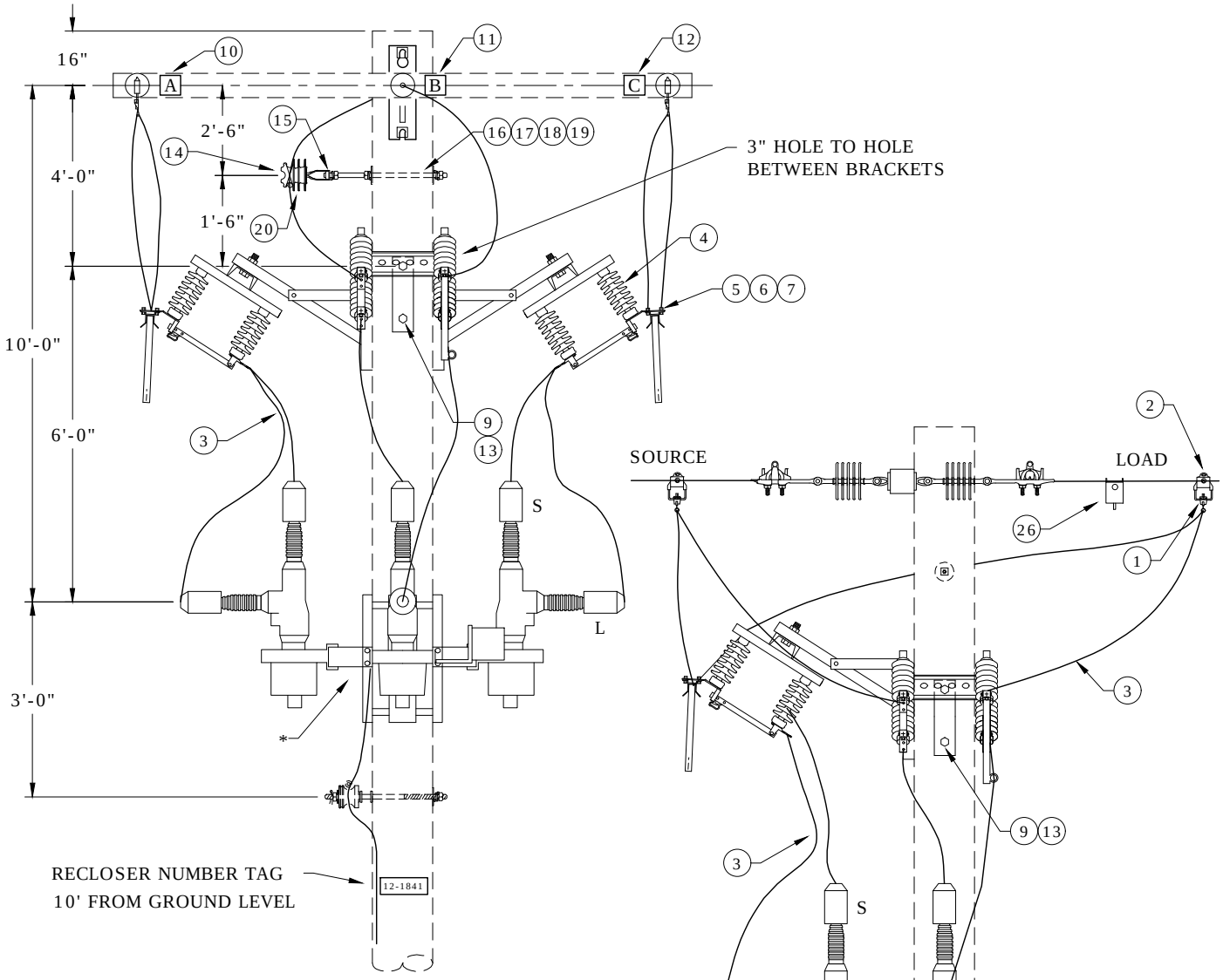

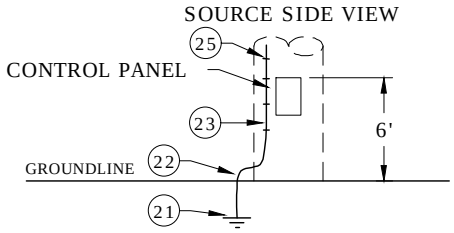

Engineering Note: Voltage sensor and CTs are in the horizontal bushing well.

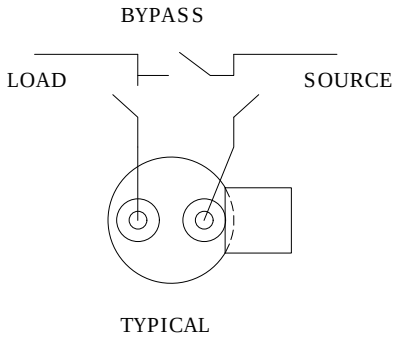

* Need pole diameter measurement for Transformer shop to build cluster-mount and consult Service Department for location.

Notes:

1. Type G & W reclosers are not source sensitive. Source or load may be on either bushing. Drawing just shows preferred connections.
2. Call for reclosers separately.
3. Use 50' Class 4 pole minimum.

Rev 2: Added note on source and load designation, and changed to Copperweld ground.

Clark Public Utilities

CONSTRUCTION STANDARDS

THREE 1Ø
SOLID DIELECTRIC RECLOSERS

REVISIONS

R	DATE	ENGR	OPS
1	7/29/10	KJP	
2	2/25/15	KJP	

PAGE: 1 of 2 | R5 | CAD FILE: R5 | APP: CM/AH | DATE: 1/13/10 | SECTION 800

Rev 2: Added note on source and load designation, and changed to Copperweld ground.

ITEM NO.	DESCRIPTION	R5 ADDITIONAL MATERIAL QTY.	S/N
1	Clamp, Hotline GP 1540	6	285
2	Clamp, Hotline Stirrup, 266.5 - 397.5 Al/Cu	6	2340
3	Conductor, 4/0 Cu, 1/C, 600V XLP, 19 Str.	80	382
4	Switch, Transfer 600A	3	1276
5	Connector, Comp Lugs, Cu 4/0 to Cu 4/0	12	434
6	Bolt, Machine 1/2" x 2", Stainless Steel	24	132
7	Bolt, Assembly, 1 1/2" x 2", SS W/ Belleville & Flat Washers	48	1389
8	Bolt, Machine 5/8" x 12", Galv., 12,400 lbs. Ultimate Tensile	4	155
9	Bolt, Machine 5/8" x 14", Galv., 12,400 lbs. Ultimate Tensile	2	156
10	Tag, Phasing - A	1	1280
11	Tag, Phasing - B	1	1281
12	Tag, Phasing - C	1	1282
13	Washer, Curved, Square, Cast 3" x 3" x 3/8" Thick x 13/16" Hole	4	1392
ITEM NO.	DESCRIPTION	PR20TREE QTY.	S/N
14	Insulator, Pin, C Neck, Polyethylene	1	1968
15	Pin, Adapter	1	959
16	Washer, Curved, Square, Cast 3" x 3" x 3/8" Thick x 13/16" Hole	2	1392
17	Bolt, Double, Arm, 5/8" x 16" Galv.	1	81
18	Washer, Lock, Spring, Double Coil, Galv., 5/8"	1	2217
19	Washer, Lock, Spring, Single Coil, Galv., 5/8"	2	1403
20	Wire, Tie, Al Annealed #4 SD	10	3012
ITEM NO.	DESCRIPTION	N1 QTY.	S/N
21	Rod, Ground, 5/8" x 8'	1	1124
22	Clamp, Ground rod, 5/8", Small, Bronze	1	281
23	Conductor, Cu-Clad Steel, #4 Cu Equivalent, Black Jacket	36	1512
24	Connector, Compression, Cu/Al, Neutral	1	413
25	Staple, Ground, Barbed, Galv. 1 1/2"	10	2707
ITEM NO.	DESCRIPTION	ADDITIONAL MATERIAL QTY.	S/N
26	Fault Indicator, OH Beacon, 400A	3	2558
27	Conduit, Flex, Liquid Tight, 3/4"	10	1615
28	Conduit, PVC, 3/4" x 10', Sch. 80	3	2221
29	Conductor, Cu, #12, 600V, 19 Strand (Streetlight)	35	386
30	Standoff Bracket 10 1/2"	3	226

Clark Public Utilities

CONSTRUCTION STANDARDS

THREE 1Ø
SOLID DIELECTRIC RECLOSERS

REVISIONS

R	DATE	ENGR	OPS
1	7/29/10	KJP	
2	2/25/15	KJP	

PAGE: 2 of 2

R5

CAD FILE: R5

APP: CM/AH
DATE: 1/13/10

SECTION 800

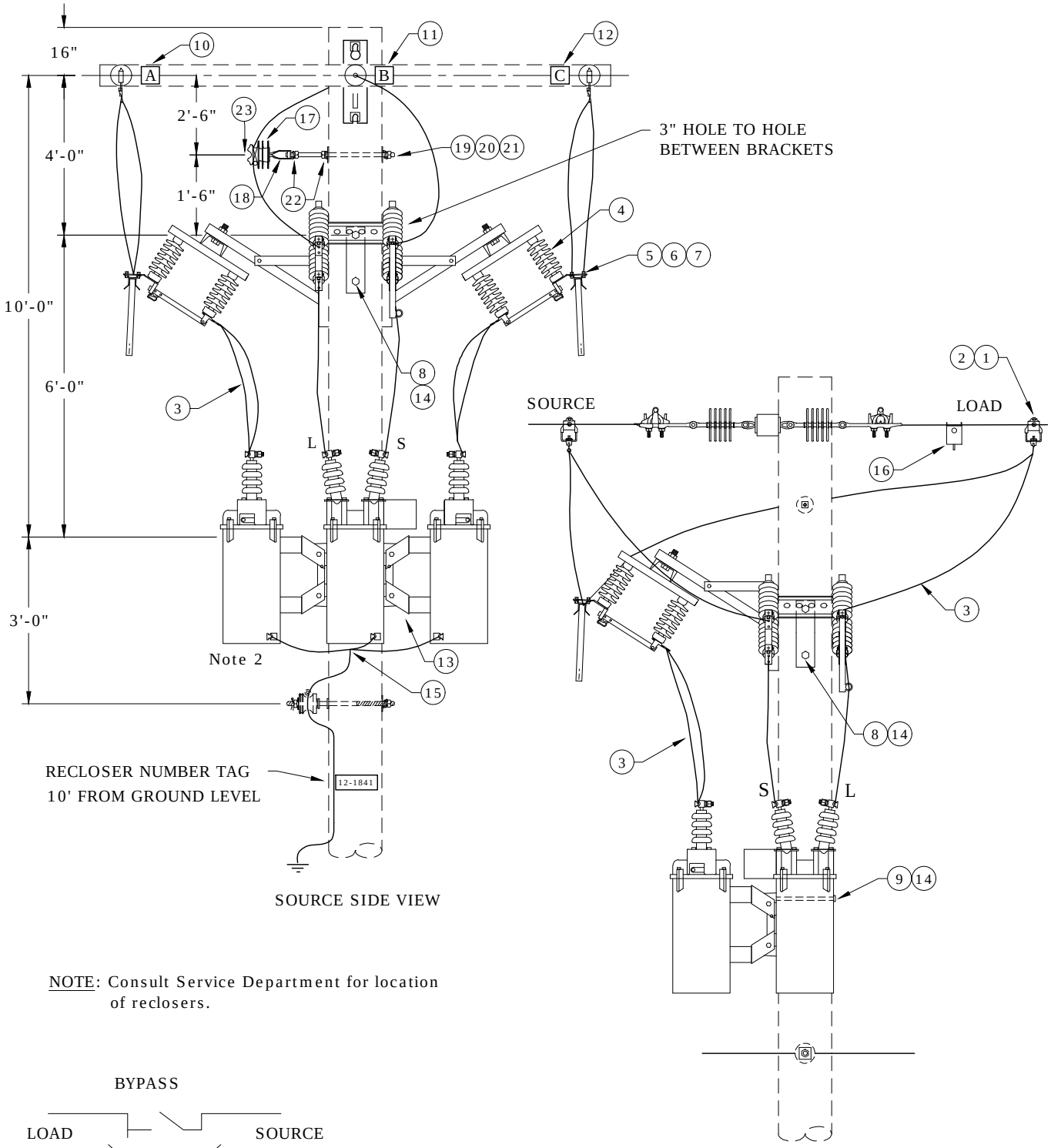

NOTE: Consult Service Department for location of reclosers.

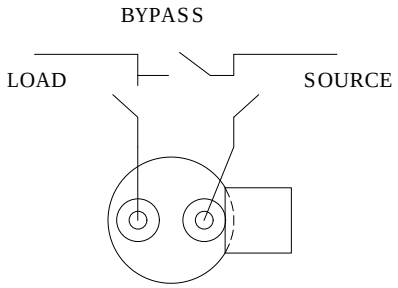

TYPICAL

NOTES:

1. Type L reclosers are not source sensitive. Source or load may be on either bushing.
2. Type D and VXE reclosers are source sensitive. The source must be connected to the bushing closest to the indicator rain shield. The tank ground is on top of D & VXE reclosers.
3. Call for reclosers separately.
4. Use 50' Class 2 pole minimum.

REV. 3: Added deadend assembly to drawing, changed Note #4 to 50', and added "Oil-Filled" to title

Clark Public Utilities

CONSTRUCTION STANDARDS

THREE 1Ø
OIL-FILLED RECLOSERS

REVISIONS

R	DATE	ENGR	OPS
1	2/23/00	HWH	MA
2	6/17/03	LB	DK
3	8/25/09	CM	AH

PAGE: 1 of 2

R6

CAD FILE: R6

APP: ELM

DATE: 1/31/80

SECTION 800

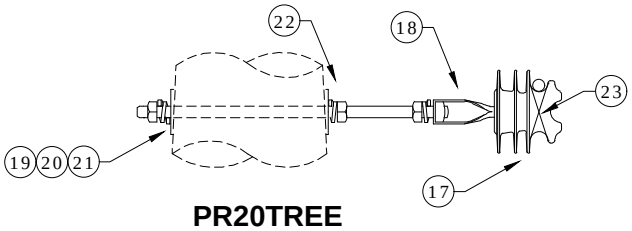

PR20TREE

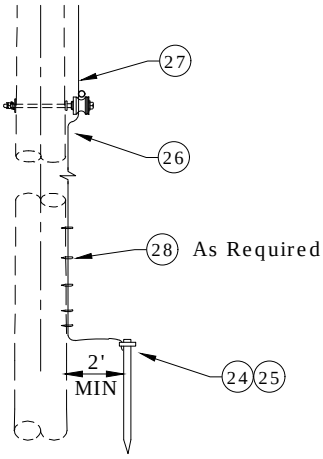

N1

REV. 3: Added deadend assembly to drawing, changed Note #4 to 50', and added "Oil-Filled" to title

ITEM NO.	DESCRIPTION	R6 ADDITIONAL MATERIAL QTY.	S/N
1	Clamp, Hotline AGP 1540	6	285
2	Clamp, Hotline Stirrup	6	2340
3	Cond. CU 4/0 1C 600V	80	382
4	Switch, Transfer 600A	3	1276
5	Connector, Comp Lug, Cu 4/0	12	434
6	Bolt, Machine 1/2" X 2", SS	24	132
7	Washer Belleville Assembly 1/2"	48	1389
8	Bolt, Machine 5/8" x 12", Galv.	4	155
9	Bolt, Machine 5/8" x 14", Galv.	2	156
10	Tag, Phasing - A	1	1280
11	Tag, Phasing - B	1	1281
12	Tag, Phasing - C	1	1282
13	Mount, Triple Cluster Trans. Al	1	904
14	Washer, Square Curved, 3" x 3" x 3/8" Thick x 13/16" Hole	4	1392
15	Connector, Cu, Compression, #4-#4 (4C4)	3	450
16	Fault Indicator, OH Beacon	3	2558

ITEM NO.	DESCRIPTION	PR20TREE QTY.	S/N
17	Insulator, Pin C Neck	1	1968
18	Pin, Adapter	1	959
19	Washer, Square, Cast, 3" x 3" x 3/8" Thick x 13/16" Hole	2	1392
20	Bolt, Double, Arm, 5/8" x 16"	1	81
21	Washer, Spring, 5/8"	1	2217
22	Washer Lock, 5/8"	2	1403
23	Wire, Tie, Al Annealed #4 SD	10	3012

ITEM NO.	DESCRIPTION	N1 QTY.	S/N
24	Rod, Ground, 5/8" x 8'	1	1124
25	Clamp, Ground rod, 5/8", Small, Bronze	1	281
26	Conductor, Cu 4SLD 1C	36	390
27	Connector, Compression, Cu/Al, Neutral	1	413
28	Staple, Ground Wire	10	1228

Clark Public Utilities

CONSTRUCTION STANDARDS

THREE 1Ø
OIL-FILLED RECLOSERS

REVISIONS

R	DATE	ENGR	OPS
1	2/23/00	HWH	MA
2	6/17/03	LB	DK
3	8/25/09	CM	AH

PAGE: 2 of 2 | R6 | CAD FILE: R6

APP: ELM
DATE: 1/31/80

SECTION 800

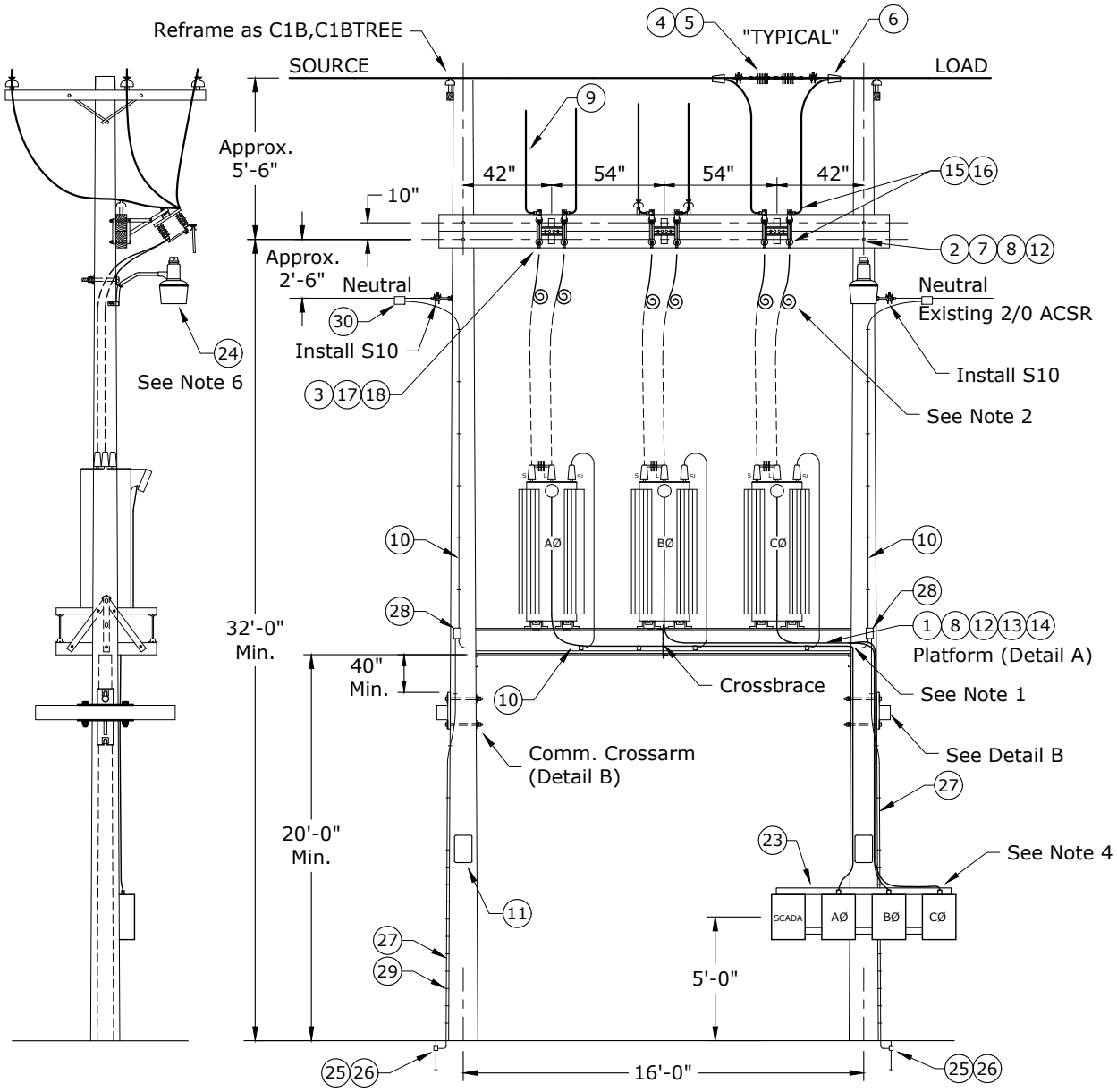

Notes:

1. Ground bus across bottom of regulator platform:
   - use 2/0 Str Cu
   - tie ground bus to system neutral
   - tie regulator cases to ground bus
   - tie ground bus to pole ground
2. Terminate (6) 4/0 Cu leads on switches & coil up 10' and leave for CPU substation crew.
3. Regulators, poles, and any reframing of primary or neutral must be called for separately.
4. Tie Jimmy bracket ground to pole ground.
5. Based on distance to road and size of pull-off, engineer may require control panel, switches, etc. to face the field instead of the road.
6. Engineer to call for #6 Duplex (S/N 357) for high light from nearest transformer.
7. Minimum pole size is 45' Class 2.

Rev. 4 - Changed Stirrup connector to wedge tap.

Clark Public Utilities

CONSTRUCTION STANDARDS

3Ø REGULATOR INSTALLATION

REVISIONS

R	DATE	ENGR	OPS
1	6/17/03	LB	DK
2	2/19/08	LB	AH
3	12/18/19	CM	GM
4	12/14/20	JDK	

PAGE: 1 of 4

REG3

CAD FILE: REG3

APP: LB/AH

DATE: 11/1/00

SECTION 800

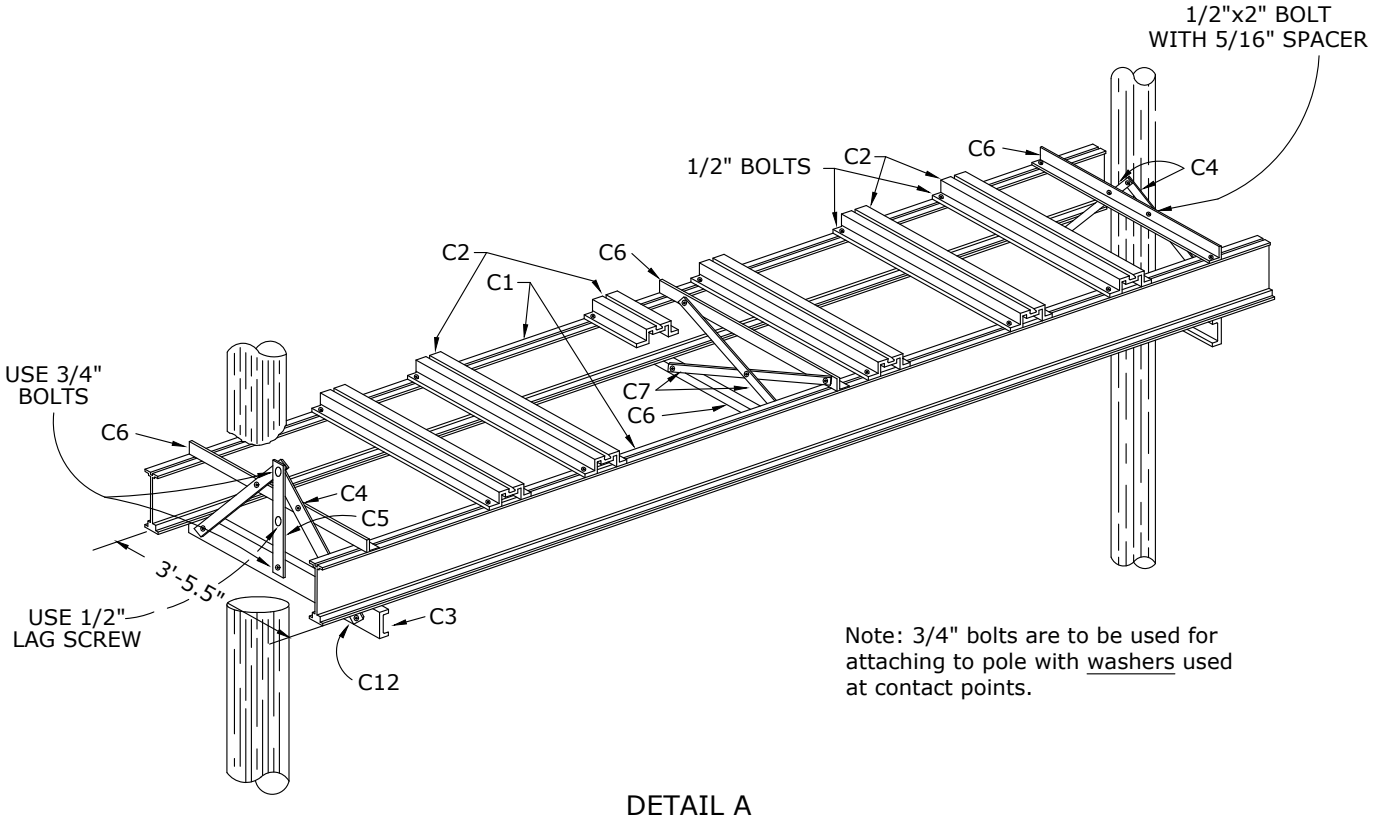

Note: 3/4" bolts are to be used for attaching to pole with washers used at contact points.

DETAIL A

Platform Does NOT Come with Lag Screws & Through Bolts

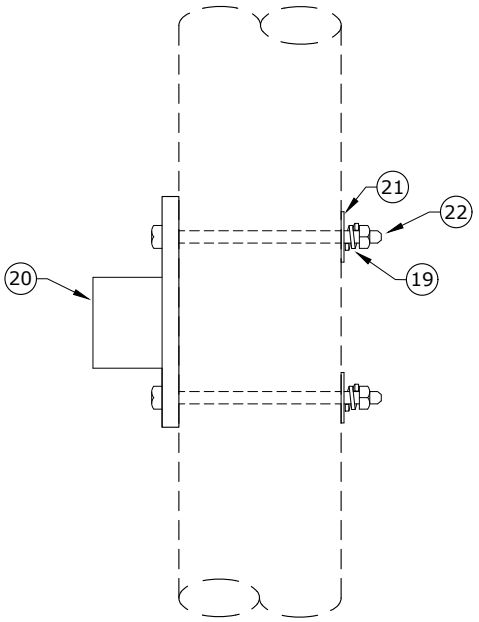

DETAIL B

Communications Fiberglass Crossarm

Rev. 4 - Changed Stirrup connector to wedge tap.

Clark Public Utilities

CONSTRUCTION STANDARDS

3Ø REGULATOR INSTALLATION

REVISIONS

R	DATE	ENGR	OPS
1	6/17/03	LB	DK
2	2/19/08	LB	AH
3	12/18/19	CM	GM
4	12/14/20	JDK	

PAGE: 2 of 4

REG3

CAD FILE: REG3

APP: LB/AH

DATE: 11/1/00

SECTION 800

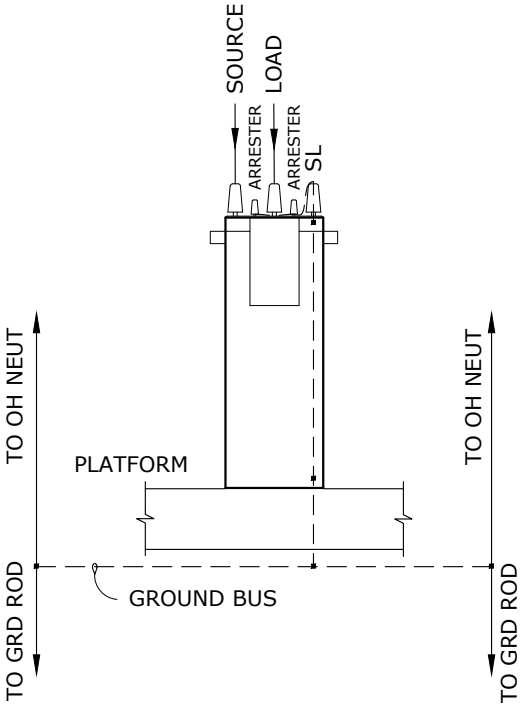

Typical Grounding of Regulator

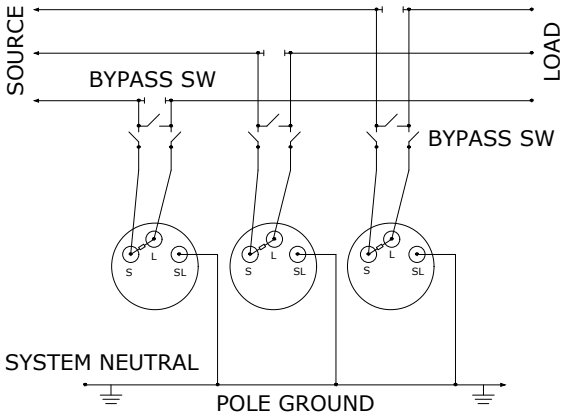

Electrical Wiring Diagram

Source and load are shown for normal feed. Regulators are reverse feed units and will operate correctly with source and load reversed.

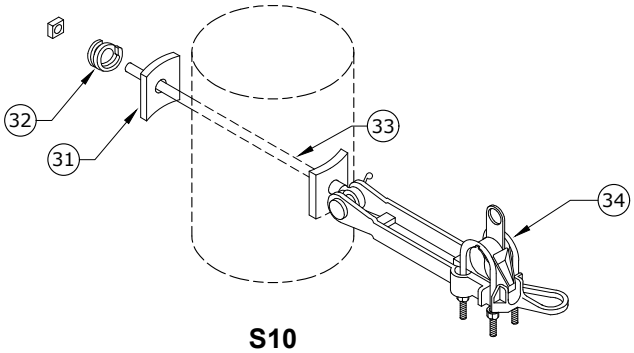

S10

Rev. 4 - Changed Stirrup connector to wedge tap.

Clark Public Utilities

CONSTRUCTION STANDARDS

3Ø REGULATOR INSTALLATION

REVISIONS

R	DATE	ENGR	OPS
1	6/17/03	LB	DK
2	2/19/08	LB	AH
3	12/18/19	CM	GM
4	12/14/20	JDK	

PAGE: 3 of 4

REG3

CAD FILE: REG3

APP: LB/AH

DATE: 11/1/00

SECTION 800

Rev. 4 - Changed Stirrup connector to wedge tap.

ITEM NO.	DESCRIPTION	REG3	
		QTY.	S/N
1	Platform, Regulator, AL, w/o Walkway	1	2505
	Each Platform Consists Of: (Items #C1 Thru #C13)		
C1	*11 1/2" Aluminum Beam, 16'-8" length*	2	
C2	*Aluminum Channel, 41 1/8" long*	6	
C3	*5" Aluminum Channel, 3'-5 5/8" long*	2	
C4	*5/16" x 2 3/4" Aluminum Brace*	4	
C5	*5/16" x 2 3/4" Aluminum Template Brace, 1'-10 7/16" long*	2	
C6	*Aluminum Angles (Stabilizer)*	4	
C7	*3/16" x 1 1/2" Aluminum Spacers*		
C8	*5/16" Aluminum Spacers*		
C9	*1/2" x 1 1/4" Galvanized Machine Bolts with Hex Nuts*		
C10	*1/2" x 2" Galvanized Machine Bolts with Hex Nuts*		
C11	*1/2" Galvanized Palnuts*	45	
C12	*5/8" x 1 1/2" Galvanized Machine Bolts with Hex Nuts*	8	
C13	*5/8" Galvanized Palnuts*	8	
2	Arm, Cross (Distribution), 18' L x 3 3/4" T x 7 3/4" H	2	850
3	Switch, Bypass, Recloser/Regulator, 600A, 15kV, 1Ø	3	1276
4	Insulator, Suspension, 15kV Clevis-Tongue, Polymer	6	1967
5	Clamp, Strain #2 - 397, Distribution Deadend	6	302
6	Connector, Tap, Wedge, 397 AAC (Run) to 4/0 Str Cu (Tap)	6	2437✲
7	Washer, Square, Flat, 4" x 4" x 3/4" Hole	4	1413
8	Washer, Lock, Spring, Double Coil Galv., 3/4"	8	2218
9	Conductor, 600V, XLPE, Cu, 4/0, 19 Str, 1C, USE	150	382
10	Conductor, 600V, XLPE, Cu, 2/0, 19 Str, 1C, USE	40	381
11	Sign, "Warning, Hazardous Voltage"	2	995
12	Bolt, Machine, 3/4" x 16", Galv., 18,300 lb Ultimate Tensile	8	175
13	Screw, Lag, 1/2" x 4 1/2", Twist-Drive, Drive Point	2	1132
14	Washer, Curved, Cast, 4" x 4" w/ 13/16" Hole	4	1910
15	Connector, Compression Lug, 2-Hole, 4/0 CU Only	12	434
16	Bolt, Assembly, 1/2" x 2", SS w/ Belleville & Flat Washers	24	1389
17	Bolt, Machine 1/2" x 8", Galv., 7800 lbs Ultimate Tensile	6	144
18	Washer, Square, Flat, 5/8" x 2 1/4" x 2 1/4"	6	1412
19	Washer, Lock, Spring, Double Coil, Galv., 5/8"	4	2217
20	Arm, Cross (Comm), Fiberglass, 5' L x 3-5/8" T x 4-5/8" H	2	2894
21	Washer, Curved, Square, Cast, 3" x 3" x 3/8" Thick x 13/16" Hole	4	1392
22	Bolt, Machine 5/8" x 16", Galv., 12,400 lb Ultimate Tensile	4	157
23	Jimmy Bracket for Mounting Control Boxes	1	N.S.
24	Luminaire, High Light, LED, 3000K, w/ 2' Arm, Photoeye & 5' of Prewire	1	2890
25	Rod, Ground, 5/8" x 8'	2	1124
26	Clamp, Ground Rod, 5/8", Small, Bronze	2	281
27	Conductor, Copper-Clad Steel, #4 Cu Equivalent, Covered	50	1512
28	Connector, Crimpet, Cu Run 1/0 - 2/0 Str, Tap #8 Sol -#2 Str	2	456
29	Staple, Ground, Barbed, Galvanized, 1 1/2"	60	2707
30	Connector, H-Tap, Al/Cu, Run 1/0-3/0 Str, Tap 1/0-3/0 Str	2	415
ITEM NO.	DESCRIPTION	S10 (2)	
		QTY.	S/N
31	Washer, Curved, Square, Cast, 3" x 3" x 3/8" Thick x 13/16" Hole	4	1392
32	Washer, Lock, Spring, Double Coil, Galv., 5/8"	2	2217
33	Bolt, Eye, 5/8" x 14", Galv., 12,400 lbs Ultimate Tensile	2	108
34	Clamp, Strain Distribution, #2 - 397.5 MCM	2	302

Clark Public Utilities

CONSTRUCTION STANDARDS

3Ø REGULATOR INSTALLATION

REVISIONS

R	DATE	ENGR	OPS
1	6/17/03	LB	DK
2	2/19/08	LB	AH
3	12/18/19	CM	GM
4	12/14/20	JDK	

PAGE: 4 of 4

REG3

CAD FILE: REG3

APP: LB/AH

DATE: 11/1/00

SECTION 800

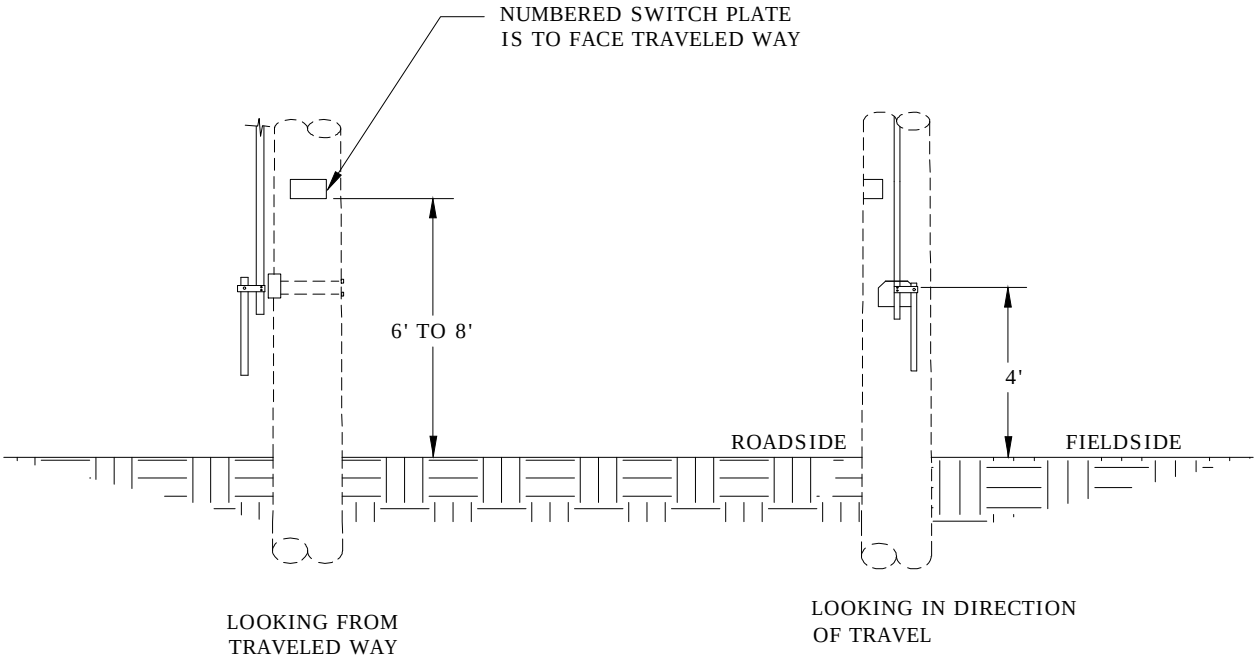

(LOCATION OF SWITCH HANDLE MAY VARY)

Clark Public Utilities

CONSTRUCTION STANDARDS

POLE TOP SWITCH
SWITCH NUMBER LOCATION

REVISIONS

R	DATE	ENGR	OPS
1	2/23/00	HWH	MA

1

PAGE:		CAD FILE:	APP: JEH	SECTION
1 of 1	SW3	SW3	DATE: 2/22/00	800

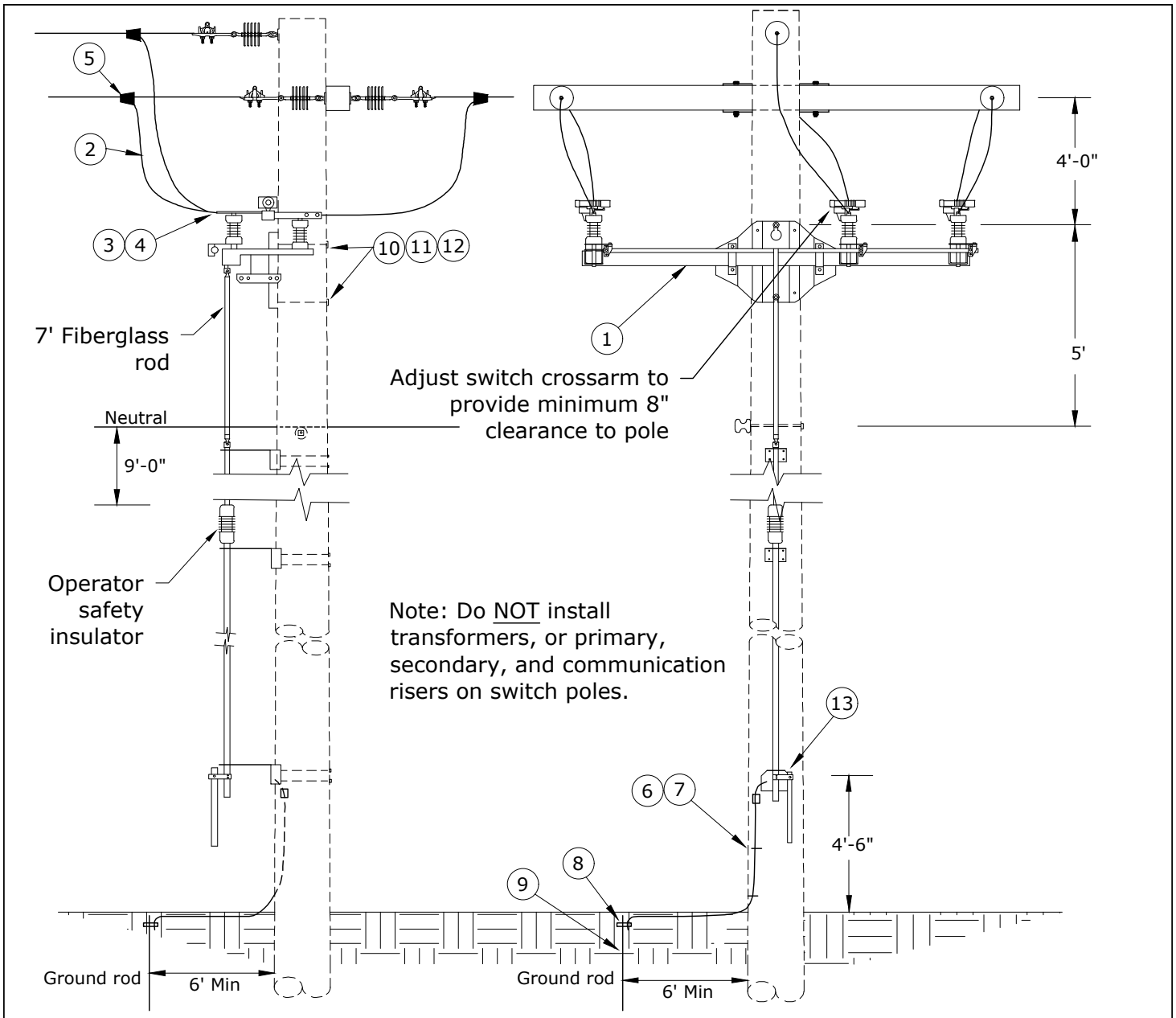

Rev. 3 - Added secondary and communication risers to note of restricted installations on switch poles, and corrected material issue.

ITEM NO.	DESCRIPTION	SW6	
		QTY.	S/N
1	Switch, Loadbreak, Horizontal, 900A, 15kV	1	2432
2	Conductor, OH, AAC, 397.5 MCM, 19-Str, Bare, 1C	60	367
3	Connector, Compression Lug, 2-Hole, 336 ACSR & 397 AAC	6	438
4	Bolt, Assembly, 1/2" x 2", SS w/ Belleville & Flat Washers	12	1389
5	Connector, Tap, Wedge, Run & Tap 336 ACSR - 397AAC	6	2501
6	Conductor, Copper-Clad Steel, Black w/ Green Strip, #4 Cu Equivalent, 40% Annealed	20	1512✲
7	Staple, Ground, Barbed, Galvanized, 1 1/2"	5	2707✲
8	Clamp, Ground Rod, 5/8", Small, Bronze	1	281
9	Rod, Ground, 5/8" x 8'	1	1124
10	Bolt, Machine, 3/4" x 16", Galv, 18,350 lb Ultimate Tensile	2	175
11	Washer, Curved, Cast 4" x 4" x 13/16" Hole	2	1910
12	Washer, Lock, Spring, Double Coil, 3/4"	2	2218
13	Lock, Padlock, 2" Hardened Stainless Steel Shackle for OH Switches	1	2564

Clark Public Utilities

CONSTRUCTION STANDARDS

3Ø SWITCH
UNDERSLUNG
900A

REVISIONS

R	DATE	ENGR	OPS
1	11/10/05	LB	AH
2	12/14/09	KJP	
3	3/7/23	CM	GM

PAGE: 1 of 1

SW6

CAD FILE: SW6

APP: HWH/MA
DATE: 2/23/00

SECTION 800

900
METERING

11/19/2020

~	M	Metering Requirements - General, Commercial & Residential
~	M1	Primary Metering Installation - OH to UG - 7.2kV, Wye – 3-Element Meter
~	M1A	Primary Metering Installation - OH - 7.2kV, Wye - 3-Element Meter
~	M4	Primary Metering Installation - OH to UG - 7.2kV, 1Ø, 1-Element Meter
~	M4A	Primary Metering Installation - OH - 7.2kV, 1Ø, 1-Element Meter
~	M7	Underground Primary Metering Pad – 1Ø - 200 Amp
C	M8	Underground Primary Metering Pad – 3Ø - 200 and 600 Amp
~	M16	Secondary Metering Installation - Pole Mounted - 3Ø, 4-Wire
~	M17	Secondary Metering Installation - Pole Mounted - 1Ø, 3-Wire
~	M20	Pad & Assembly - Secondary Metering for Padmount Transformer
~	M23	D/I CT Metering at Padmount Transformer
~	M28	Recommended Layout for Temporary Electric Service - 120/240v – 3-Wire
~	M28A	Recommended Conductor Supports for Temporary Electric Service
~	MBCT	CT Meter Base Support for Padmount Transformer
~	UM1	Primary 3Ø Metering Enclosure
~	UMS4-36	Secondary 1Ø CT Metering Assemblies Residential

N New Standard
R Redrawn Standard
C Changed Standard
~ No Change

CLARK PUBLIC UTILITY

METERING REQUIREMENTS BASED ON EUSERC SPECIFICATIONS

TYPE OF SERVICE OR SOURCE VOLTAGES		SIZE	NUMBER OF TERMINALS	BYPASS PROVISION	TEST SWITCH	DEMAND METERING	REACTIVE METERING
SINGLE PHASE 120/240 VOLTS (Swimming pools over 35kw will be C.T.'d or 320 amp)	Commercial	200 amp	4	BLOCK BYPASS *	NO	20KW OR GREATER	NO
	Residential	200 amp	4	NO	NO	NO	NO
		320 amp	4	BLOCK BYPASS	NO	COMMERCIAL ONLY	NO
	Commercial	C.T.	6	NO	YES	20KW OR GREATER	NO
	Residential	C.T.	6	NO	NO	NO	NO
NETWORK 120/208V (2 LEGS OF Y)	Commercial	200 amp	5	SAFETY SOCKET	NO	NO	NO
	Residential	200 amp	5	NO	NO	NO	NO
	Commercial	C.T.	8	NO	YES	NO	NO
4 WIRE WYE 120/208 VOLTS		200 amp	7	SAFETY SOCKET	NO	YES	NO
		C.T.	13	NO	YES	YES	YES *
4 WIRE DELTA 240/120 VOLTS		200 amp	7	SAFETY SOCKET	NO	YES	NO
		C.T.	13	NO	YES	YES	YES *
3 WIRE 3Ø DELTA 240V (Existing service only. New services, current trans. Will be 4 wire 240/120)		200 amp	5	SAFETY SOCKET	NO	YES	NO
		C.T.	8	NO	YES	YES	YES *
3 WIRE 3Ø DELTA 480V (Existing service only. New services, current trans. Will be 4 wire 240/480		200 amp	5	SAFETY SOCKET	NO	YES	NO
		(Contact district about type of socket and whether or not current transformers and reactive metering will be required before making any 480 volt installations)					
4 WIRE 3Ø 277/480 VOLTS		200 amp B/base	7	SAFETY SOCKET	NO	YES	NO
		C.T. & V.T.	13	NO	YES	YES	YES *
		Prim. Met. 7200/120 P.T. & C.T.	13	NO	YES	YES	YES *

C.T. - Current Transformer

V.T. - Voltage Transformer

Rev 2 - Changed blocks marked with a *.

Clark Public Utilities

CONSTRUCTION STANDARDS

METERING REQUIREMENTS
GENERAL

REVISIONS

R	DATE	ENGR	OPS
0	8/20/02		
1	8/2/05	LB	AH
2	1/13/10	CM	AH

PAGE: 1 of 4

M

CAD FILE: M

APP: JEH

DATE: 2/22/00

SECTION 900

SELF CONTAINED

120/208V
1 PHASE NETWORK

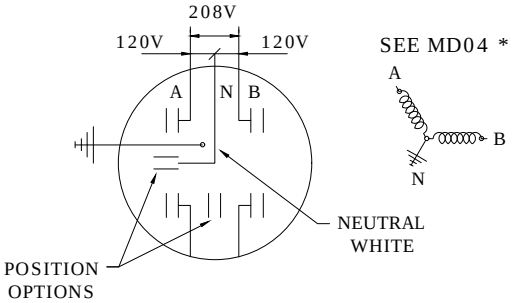

120V 2
WIRE

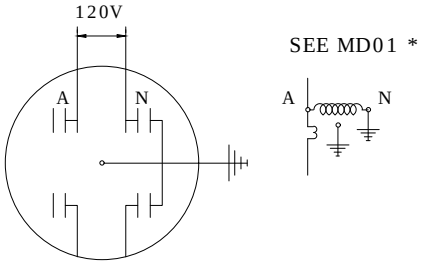

3 PHASE
3 WIRE 240V

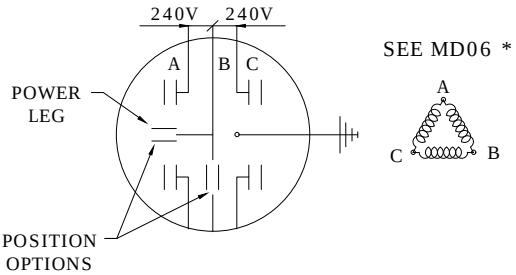

SINGLE PHASE
3 WIRE 120/240V

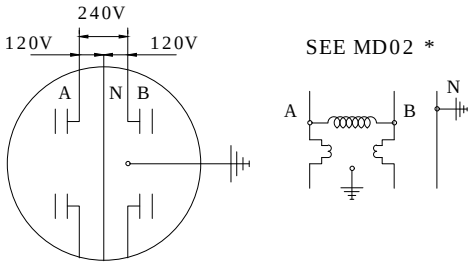

3 PHASE 4 WIRE
DELTA 240/120V

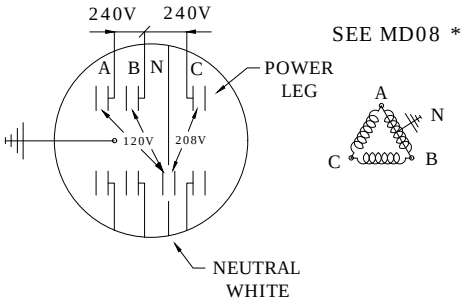

3 PHASE 4 WIRE
WYE 120/208V
(or 277/480V)

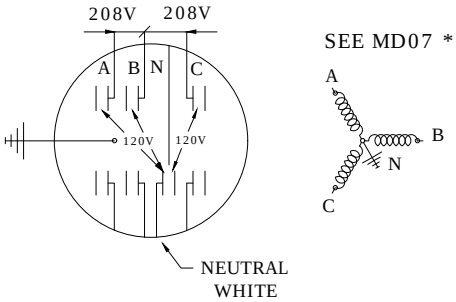

C.T. RATED

3 WIRE SERVICE USING ONE
C.T. 6 TERMINAL SOCKET

SEE MD09 *

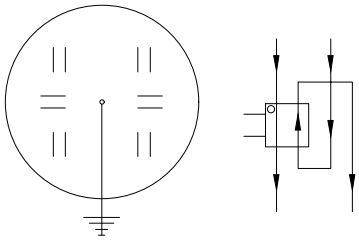

3 WIRE SINGLE SERVICE USING 2
C.T.'s 6 TERMINAL SOCKET

SEE MD11 *
MD11A

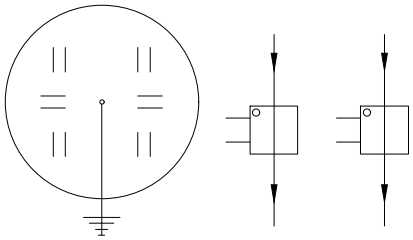

LEGEND

CURRENT COIL
VOLTAGE COIL

ALL METER SOCKETS TO BE GROUNDED

* REV. 1 - Added Metering Diagram Numbers.

Clark Public Utilities

CONSTRUCTION STANDARDS

METERING REQUIREMENTS
GENERAL

REVISIONS

R	DATE	ENGR	OPS
0	8/20/02		
1	8/2/05	LB	AH

0 REDRAWN IN CAD

PAGE:		CAD FILE:	APP: JEH	SECTION
2 of 4	M	M	DATE: 2/22/00	900

Clark Public Utilities Metering Requirements
Commercial Applications

Source Voltage	Ampacity	Reference Circle AW Part Number	Meter Diagram Numbers	Number of Terminals	Bypass Provision Required	Test Switch Required
120 Volts 1∅ 2 Wire	0-100 Amps	U121314*	MD01	4	Yes	No
120/240Volt 1∅ 3Wire	0-200 Amps	U264	MD02	4	Yes	No
120/240Volt 1∅ 3Wire	0-400 Amps	324N, 324NF	MD03	4	Yes	No
120/240Volt 1∅ 3Wire	Over 200 Amps	12146	MD10 MD11	6	No	Yes
240/480Volt 1∅ 3Wire	0-200 Amps	124TB	MD02 MD05 Dmd	4	Yes	No
240/480Volt 1∅ 3Wire	Over 200 Amps	12146	MD10 MD11	6	No	Yes
120/208Volt 3Wire Network	0-200 Amps	125TB	MD04	5	Yes	No
120/208Volt 3Wire Network	Over 200 Amps	12148	MD12	8	No	Yes
240Volt 3∅ 3Wire Delta	0-200 Amps	125TB	MD06	5	Yes	No
120/208Volt 3∅ 4Wire Wye	0-200 Amps	127TB	MD07	7	Yes	No
120/208Volt 3∅ 4Wire Wye	Over 200 Amps	121413	MD13	13	No	Yes
240/120Volt 3∅ 4Wire Delta	0-200 Amps	127TB	MD08	7	Yes	No
240/120Volt 3∅ 4Wire Delta	Over 200 Amps	121413	MD14	13	No	Yes
277/480Volt 3∅ 4Wire Wye	0-200 Amps	127TB	MD07	7	Yes	No
277/480Volt 3∅ 4Wire Wye	Over 200 Amps	121413	MD13	13	No	Yes
480Volt 3∅ 3Wire Delta	0-200 Amps	125TB	MD06	5	Yes	No
480Volt 3∅ 3Wire Delta	Over 200 Amps	12148	MD12	8	No	Yes

Circle AW part numbers are for cross reference only.
All Commercial current transformer cabinets shall have hinged doors.

CURRENT TRANSFORMER CABINET DIMENSIONS, CT MOUNTING BASE

Amperes	Dimensions	Circle AW or Equivalent
200 Amps- 400 Amps 1∅	24" X 30" X 11"	6019-HAL (LUG LUG)
401 Amps- 800 Amps 1∅	30" X 36" X 11"	6019-HEL (LUG LUG)
200 Amps- 400 Amps 3∅	30" X 36" X 11"	6019-HAL or 6067-HAL
401 Amps- 800 Amps 3∅	36" X 48" X 11"	6019-HEL or 6067-HEEL

See EUSERC Spec – 328B & 329B

Over 800 Amps Switchgear Required
Maximum wire size 600 MCM per lug or parallel per EUSERC SPEC. & UL label
Rev 4: Changed blocks with a *.

Clark Public Utilities

CONSTRUCTION STANDARDS

METERING REQUIREMENTS
COMMERCIAL APPLICATION

REVISIONS

R	DATE	ENGR	OPS
1	8/2/05	LB	AH
2	12/19/07	LB	AH
3	1/13/10	CM	AH
4	6/18/10	KJP	

PAGE: 3 of 4 | M | CAD FILE: M | APP: JEH | DATE: 2/22/00 | SECTION 900

Clark Public Utilities Metering Requirements
Residential Applications

Source Voltage	Ampacity	Reference Circle AW Part Number	Meter Diagram Numbers	Number of Terminals	Bypass Provision Required	Test Switch Required
120 Volts 1∅ 2 Wire	0-100 Amps	011	MD01	4	No	No
120/240Volt 1∅ 3Wire	0-200 Amps	204, U204	MD02	4	No	No
120/240Volt 1∅ 3Wire	0-400 Amps	324N, 324NF	MD03	4	Yes	No
120/240Volt 1∅ 3Wire	Over 400 Amps	UO11, 011, 925 or 926	MD09 MD11A	5 or 6	No	No

Circle AW part numbers are for cross reference only.

CURRENT TRANSFORMER CABINET DIMENSIONS, CT MOUNTING BASE

Amperes	Dimensions	Circle AW or Equivalent
200 Amps- 400 Amps 1∅ Window	24"h X 32"w X 9"d	PED
*401 Amps- 800 Amps 1∅ Buss Mt.	24"h X 30"w X 11"d hinged door	6019-HAL (LUG LUG)
200 Amps- 400 Amps 3∅ Window	30"h X 36"w X 11"d	PED
*401 Amps- 800 Amps 3∅ Buss Mt.	36"h X 48"w X 11"d hinged door	6019-HEL (LUG-LUG)

* Optional

Notes: 1. CT Metering for 200- 400 Amp panels required pre-approval from Clark Public Utilities
2. All CT cans shall be mounted outside.

Rev 2: Add optional CT cabinet dimensions and notes.

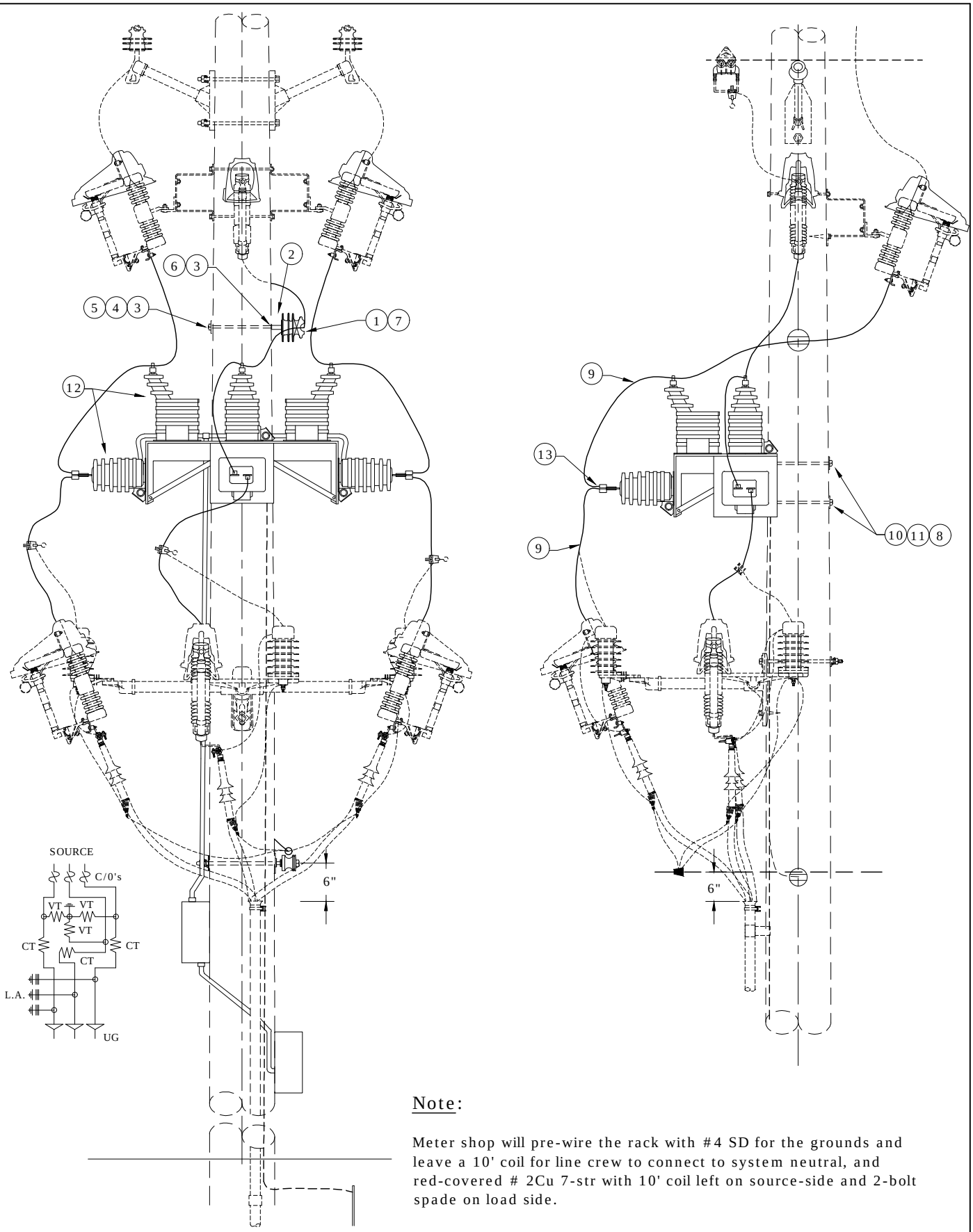

Note:

Meter shop will pre-wire the rack with #4 SD for the grounds and leave a 10' coil for line crew to connect to system neutral, and red-covered # 2Cu 7-str with 10' coil left on source-side and 2-bolt spade on load side.

Rev 2: Changed to single-bushing PTs and updated drawing & material list.

Clark Public Utilities

CONSTRUCTION STANDARDS

PRIMARY METERING INSTALLATION
OVERHEAD TO UNDERGROUND
7.2KV, WYE - 3 ELEMENT METER

REVISIONS

R	DATE	ENGR	OPS
1	3/02	Redrawn	In Cad
2	8/11/10	CM	AH

PAGE:		CAD FILE:	APP: ELM	SECTION
1 of 2	M1	M1	DATE: 1/31/80	900

Rev 2: Changed to single-bushing PTs and updated drawing & material list.

ITEM NO.	DESCRIPTION	PR20TREE	
		QTY.	S/N
1	Insulation Pin C Neck	1	1968
2	Pin Adapter	1	959
3	Washer, Curved, Square, Cast, 3" x 3" x 3/8" thick x 13/16" hole	2	1392
4	Bolt, Double, Arm, 5/8" x 16"	1	81
5	Washer, Lock, Spring, Double Coil, Galv., 5/8"	1	2217
6	Washer, Lock, Spring, Single Coil, Galv., 5/8"	2	1403
7	Wire, Tie, AL Annealed #4 SD	10	3012

ITEM NO.	DESCRIPTION	ADDITIONAL MATERIAL	
		QTY.	S/N
8	Bolt, Machine 5/8" x 12" Galv	2	155
9	Cond, Wire, Cu 1/C #2AWG 7Str 600V Red	60	2513
10	Washer, Curved, Square, Cast, 3" x 3" x 3/8" thick x 13/16" hole	2	1392
11	Washer, Lock, Spring, Double Coil, Galv., 5/8"	2	2217
12	MM1 from Meter Dept., CT/VT Assembly w/ Rack	1	N/S
13	Connector, Compression Lug, #2 Cu	3	427

Clark Public Utilities

CONSTRUCTION STANDARDS

PRIMARY METERING INSTALLATION
OVERHEAD TO UNDERGROUND
7.2KV, WYE - 3 ELEMENT METER

REVISIONS

R	DATE	ENGR	OPS
1	3/02	Redrawn	In Cad
2	8/11/10	CM	AH

PAGE:		CAD FILE:	APP: ELM	SECTION
2 of 2	M1	M1	DATE: 1/31/80	900

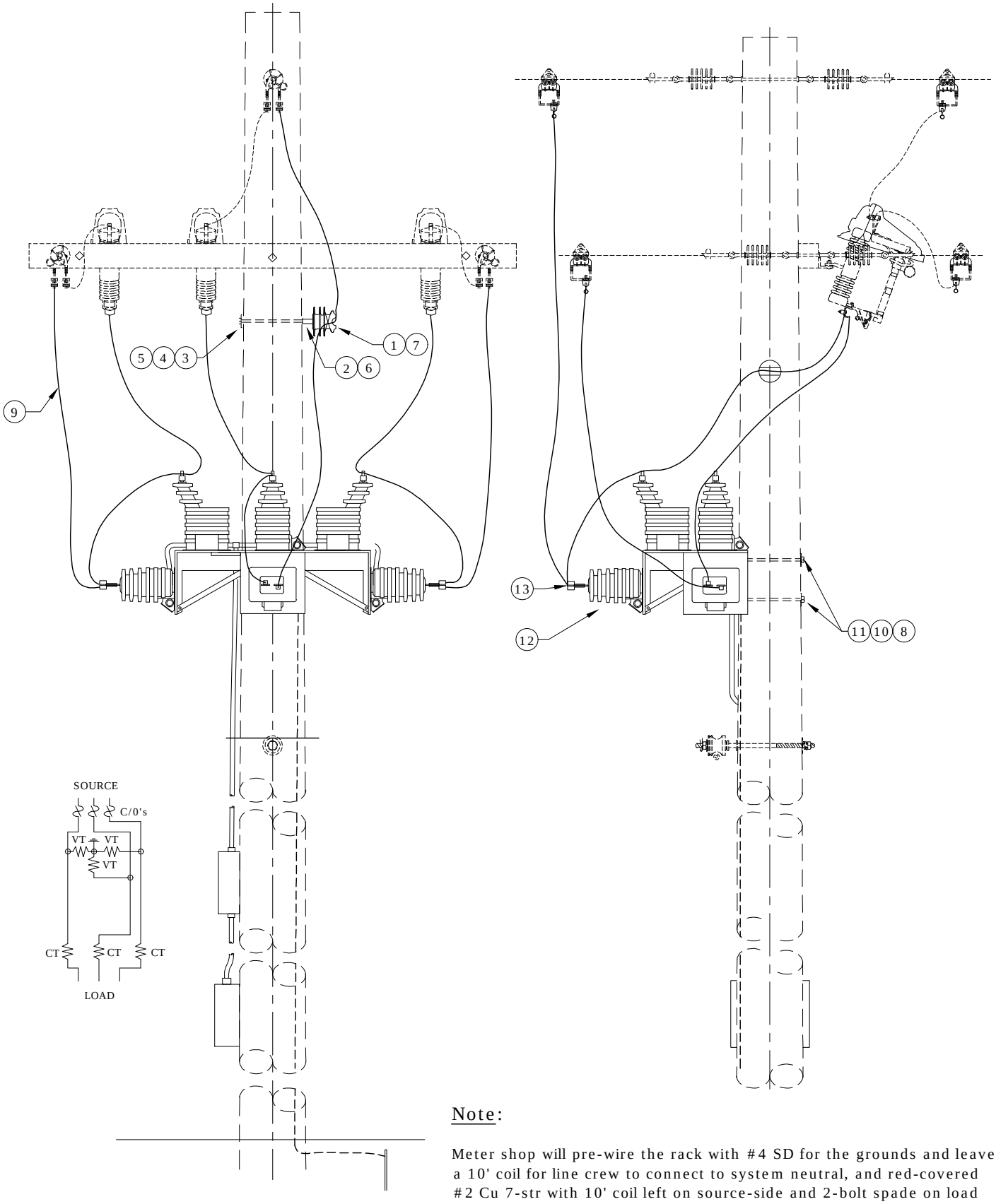

Note:

Meter shop will pre-wire the rack with #4 SD for the grounds and leave a 10' coil for line crew to connect to system neutral, and red-covered #2 Cu 7-str with 10' coil left on source-side and 2-bolt spade on load side.

Rev 2: Changed to single-bushing PTs, removed arresters, and updated drawing & material list.

Clark Public Utilities

CONSTRUCTION STANDARDS

PRIMARY METERING INSTALLATION
OVERHEAD CONSTRUCTION
7.2KV, WYE - 3 ELEMENT METER

REVISIONS

R	DATE	ENGR	OPS
1	3/02	Redrawn	In Cad
2	8/11/10	CM	AH

PAGE:		CAD FILE:	APP: ELM	SECTION
1 of 2	M1A	M1A	DATE: 1/31/80	900

Rev 2: Changed to single-bushing PTs, removed arresters, and updated drawing & material list.

ITEM NO.	DESCRIPTION	PR20TREE	
		QTY.	S/N
1	Insulation Pin C Neck	1	1968
2	Pin, Adapter	1	959
3	Washer, Curved, Square, Cast, 3" x 3" x 3/8" thick x 13/16" hole	2	1392
4	Bolt, Double Arm, 5/8" x 16"	1	81
5	Washer, Lock, Spring, Double Coil, Galv., 5/8"	1	2217
6	Washer, Lock, Spring, Single Coil, Galv., 5/8"	2	1403
7	Wire, Tie, AL Annealed #4 SD	10	3012

ITEM NO.	DESCRIPTION	Additional Material	
		QTY.	S/N
8	Bolt, Machine 5/8" x 12" Galv	2	155
9	Cond, Wire, Cu 1/C #2AWG 7Str 600V Red	60	2513
10	Washer, Curved, Square, Cast, 3" x 3" x 3/8" thick x 13/16" hole	2	1392
11	Washer, Lock, Spring, Double Coil, Galv., 5/8"	2	2217
12	MM1A from Meter Dept., CT/VT Assembly w/ Rack	1	N/S
13	Connector, Compression Lug, #2 Cu	3	427

Clark Public Utilities

CONSTRUCTION STANDARDS

PRIMARY METERING INSTALLATION
OVERHEAD CONSTRUCTION
7.2KV, WYE - 3 ELEMENT METER

REVISIONS

R	DATE	ENGR	OPS
1	3/02	Redrawn	In Cad
2	8/11/10	CM	AH

PAGE:		CAD FILE:	APP: ELM	SECTION
2 of 2	M1A	M1A	DATE: 1/31/80	900

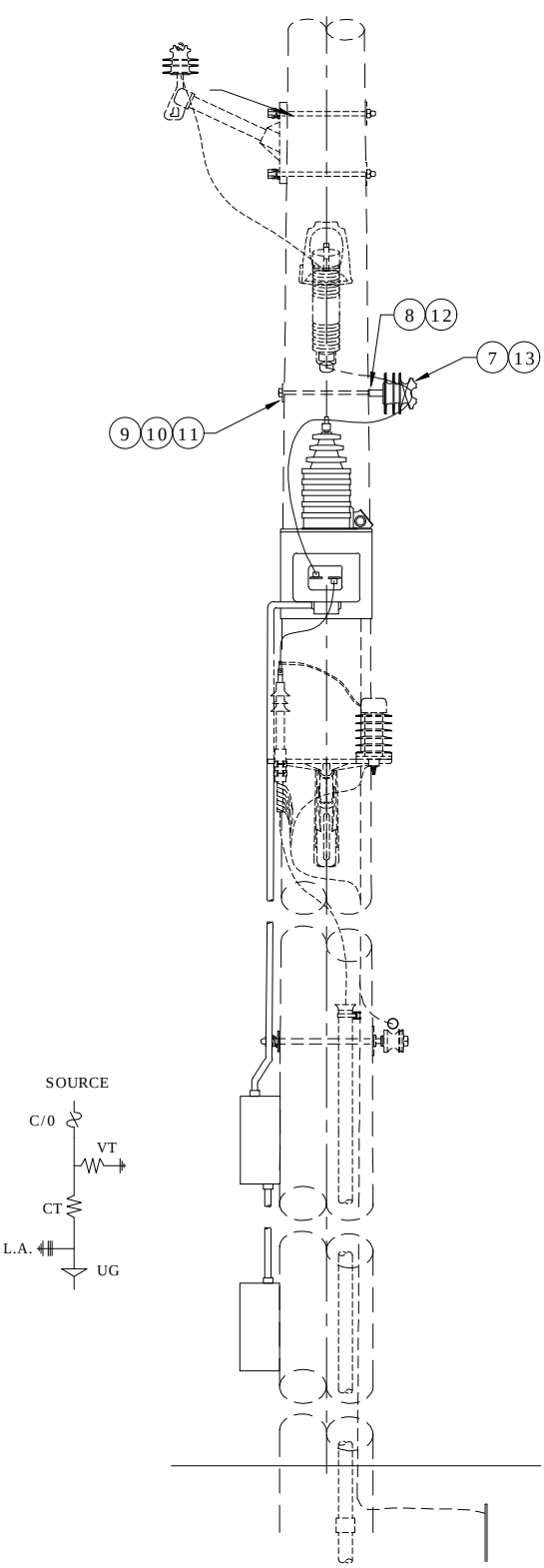

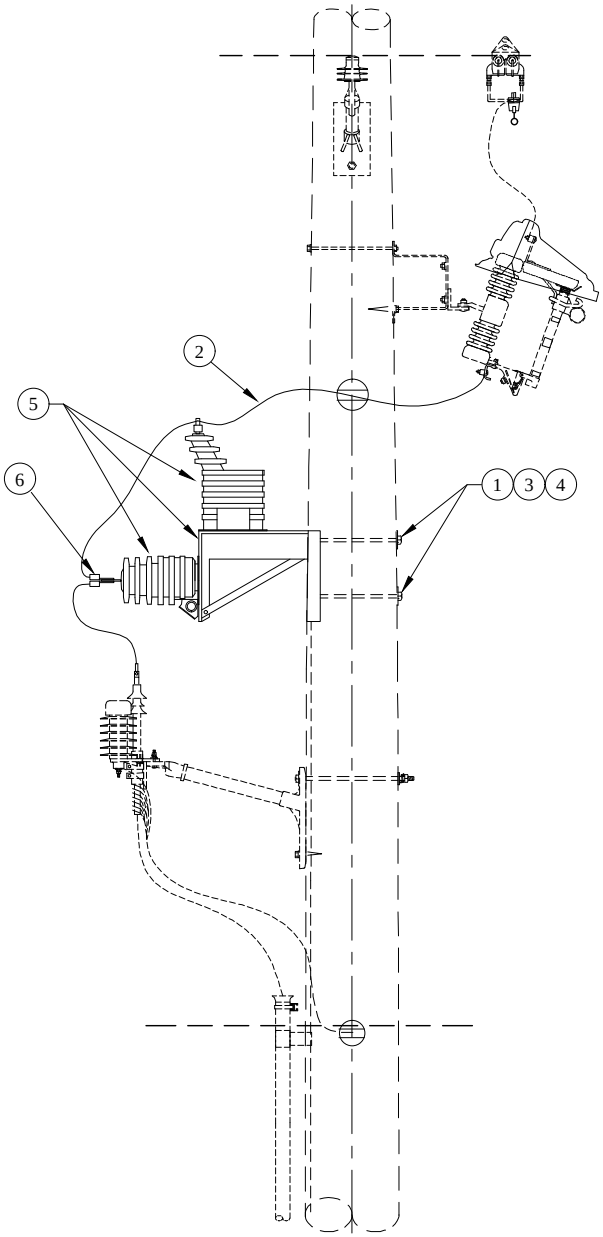

Note:

Meter shop will pre-wire the rack with #4 SD for the grounds and leave a 10' coil for line crew to connect to system neutral, and red-covered #2 Cu 7-str with 10' coil left on source-side and 2-bolt spade on load side.

Rev 2: Changed to single-bushing PTs and drawing & material corrections.

Clark Public Utilities

CONSTRUCTION STANDARDS

PRIMARY METERING INSTALLATION
OVERHEAD TO UNDERGROUND
7.2KV, 1 PHASE, 1 ELEMENT METER

REVISIONS

R	DATE	ENGR	OPS
1	3/02	Redrawn	In Cad
2	8/11/10	CM	AH

PAGE:		CAD FILE:	APP: ELM	SECTION
1 of 2	M4	M4	DATE: 1/31/80	900

Rev 2: Changed to single-bushing PTs and drawing & material corrections.

ITEM NO.	DESCRIPTION	ADDITIONAL MATERIAL	
		QTY.	S/N
1	Bolt, Machine 5/8" x 12" Galv	2	155
2	Cond, Wire, Cu 1/C #2 7Str 600V Red	20	2513
3	Washer, Curved, Square, Cast, 3" x 3" x 3/8" thick x 13/16" hole	2	1392
4	Washer, Lock, Spring, Double Coil, Galv., 5/8"	2	2217
5	MM1 from Meter Dept., CT/VT Assembly w/ Rack	1	N/S
6	Connector, Compression Lug, #2 Cu	1	427

ITEM NO.	DESCRIPTION	PR20TREE	
		QTY.	S/N
7	Insulation Pin C Neck	1	1968
8	Pin Adapter	1	959
9	Washer, Curved, Square, Cast, 3" x 3" x 3/8" thick x 13/16" hole	2	1392
10	Bolt, Double, Arm, 5/8" x 16"	1	81
11	Washer, Lock, Spring, Double Coil, Galv., 5/8"	1	2217
12	Washer, Lock, Spring, Single Coil, Galv., 5/8"	2	1403
13	Wire, Tie, AL Annealed #4 SD	10	3012

Clark Public Utilities

CONSTRUCTION STANDARDS

PRIMARY METERING INSTALLATION
OVERHEAD TO UNDERGROUND
7.2KV, 1 PHASE, 1 ELEMENT METER

REVISIONS

R	DATE	ENGR	OPS
1	3/02	Redrawn	In Cad
2	8/11/10	CM	AH

PAGE: 2 of 2

M4

CAD FILE: M4

APP: ELM

DATE: 1/31/80

SECTION 900

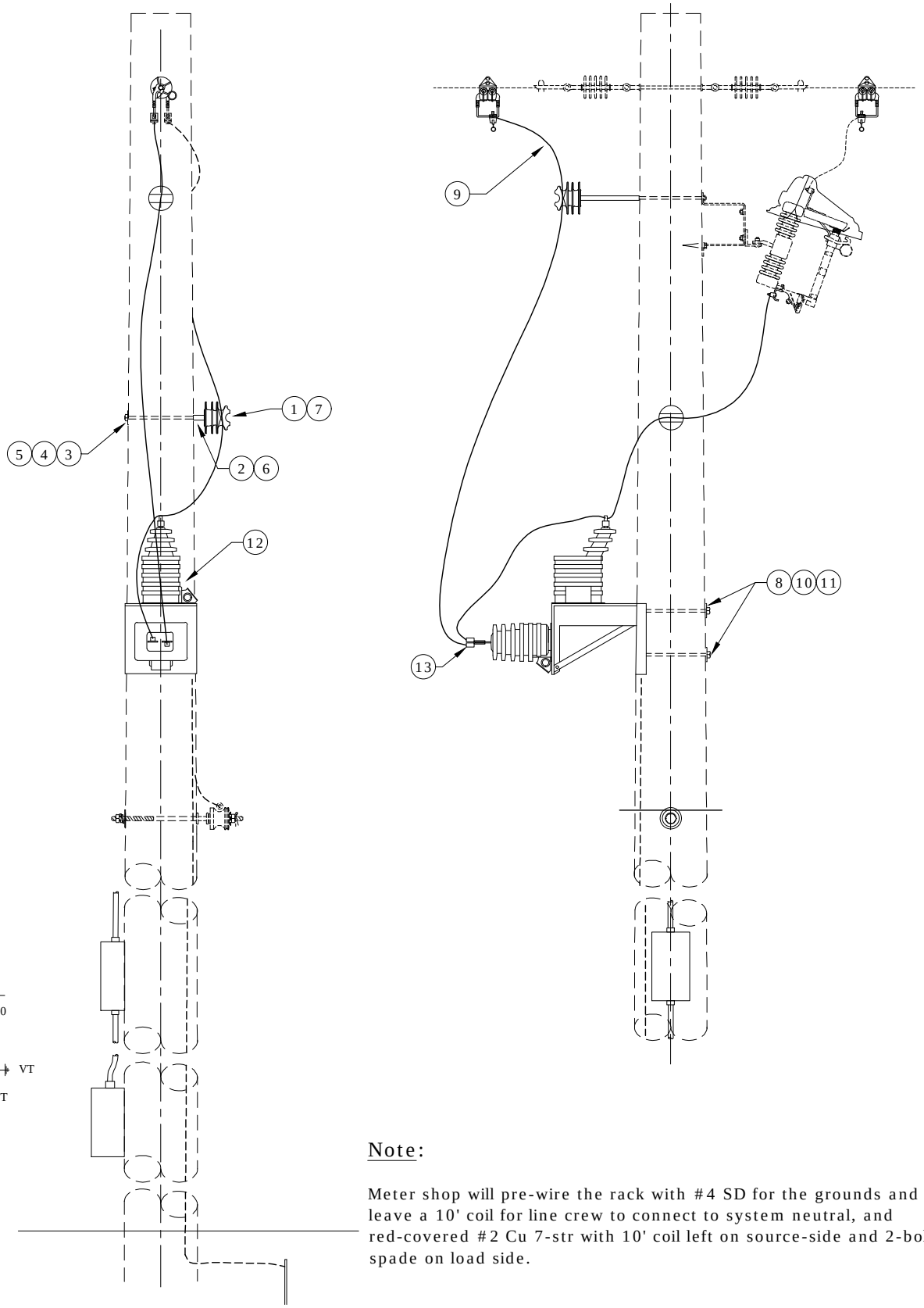

Note:

Meter shop will pre-wire the rack with #4 SD for the grounds and leave a 10' coil for line crew to connect to system neutral, and red-covered #2 Cu 7-str with 10' coil left on source-side and 2-bolt spade on load side.

Rev 2: Changed to single-bushing PTs, removed lightning arrester and drawing & material corrections.

Clark Public Utilities

CONSTRUCTION STANDARDS

PRIMARY METERING INSTALLATION
OVERHEAD CONSTRUCTION
7.2KV, 1 PHASE, 1 ELEMENT METER

REVISIONS

R	DATE	ENGR	OPS
1	3/02	Redrawn	In Cad
2	8/11/10	CM	AH

PAGE:		CAD FILE:	APP: ELM	SECTION
1 of 2	M4A	M4A	DATE: 1/31/80	900

Rev 2: Changed to single-bushing PTs, removed lightning arrester and drawing & material corrections.

ITEM NO.	DESCRIPTION	PR20TREE	
		QTY.	S/N
1	Insulation Pin C Neck	1	1968
2	Pin, Adapter	1	959
3	Washer, Curved, Square, Cast, 3" x 3" x 3/8" thick x 13/16" hole	2	1392
4	Bolt, Double Arm, 5/8" x 16"	1	81
5	Washer, Lock, Spring, Double Coil, Galv., 5/8"	1	2217
6	Washer, Lock, Spring, Single Coil, Galv., 5/8"	2	1403
7	Wire, Tie, AL Annealed #4 SD	10	3012

ITEM NO.	DESCRIPTION	Additional Material	
		QTY.	S/N
8	Bolt, Machine 5/8" x 12" Galv	2	155
9	Cond, Wire, Cu 1/C #2AWG 7Str 600V Red	20	2513
10	Washer, Curved, Square, Cast, 3" x 3" x 3/8" thick x 13/16" hole	2	1392
11	Washer, Lock, Spring, Double Coil, Galv., 5/8"	2	2217
12	MM1A from Meter Dept., CT/VT Assembly w/ Rack	1	N/S
13	Connector, Compression Lug, #2 Cu	1	427

Clark Public Utilities

CONSTRUCTION STANDARDS

PRIMARY METERING INSTALLATION
OVERHEAD CONSTRUCTION
7.2KV, 1 PHASE, 1 ELEMENT METER

REVISIONS

R	DATE	ENGR	OPS
1	3/02	Redrawn	In Cad
2	8/11/10	CM	AH

PAGE:		CAD FILE:	APP: ELM	SECTION
2 of 2	M4A	M4A	DATE: 1/31/80	900

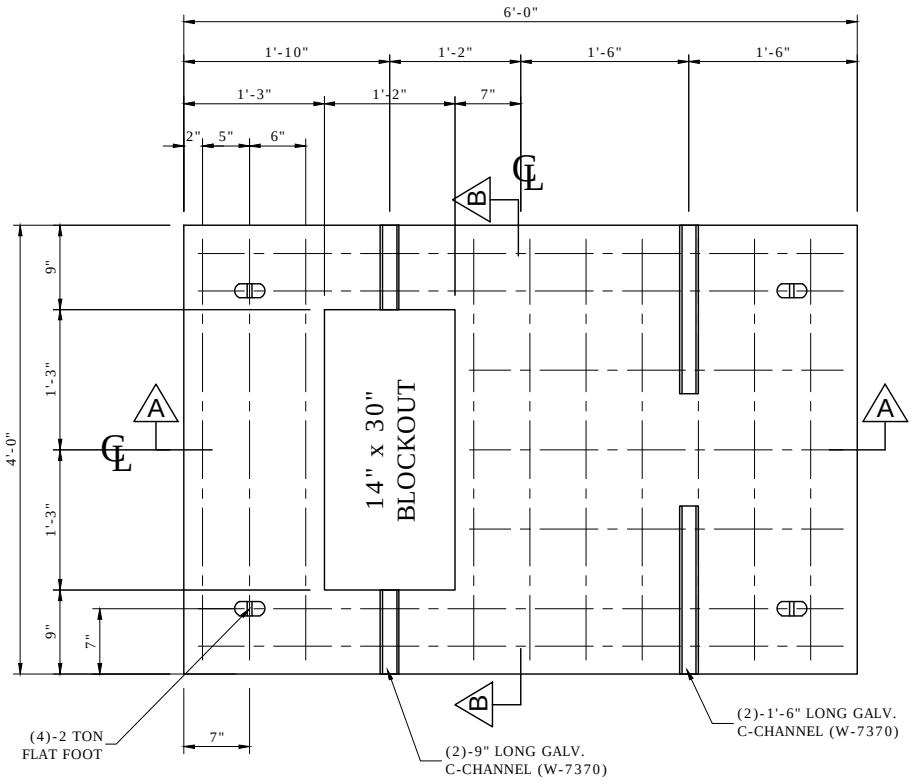

PLAN

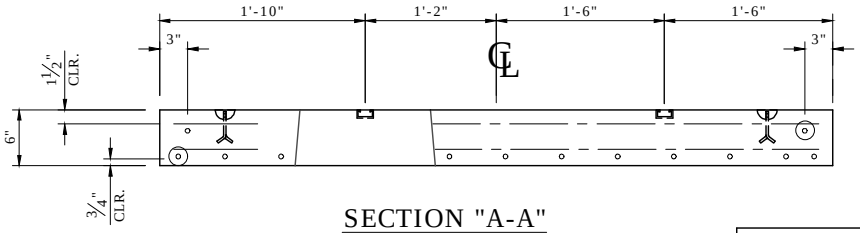

SECTION "A-A"

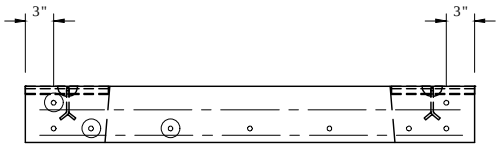

SECTION "B-B"

CONCRETE:
VOL. = VOLUME
WT. = WEIGHT

BILL OF MATERIAL

PART	DESCRIPTION	QTY.	SIZE	TOTAL WT. LBS.
1	#6 GR. 60	9	6'-9"x STR.	91
2	#6 GR. 60	2	6'-9"x STR.	20
2A	#6 GR. 60	5	4'-11"x STR.	37
3	#4 GR. 60	2	6'-9"x STR. TOP	9
4	#4 GR. 60	2	6'-9"x STR. TOP	9
	LIFT ANCHOR	4	2 TON SPREAD	
	C-CHANNEL(W-7370)	2	8" LONG	
	C-CHANNEL(W-7370)	2	1'-6" LONG	

CONCRETE PAD DETAILS FOR 1Ø 200 AMP
UNDERGROUND PRIMARY METERING ENCLOSURE

1. ALL CONCRETE SHALL BE 2500 PSI AND HAVE A SLUMP OF 4" TO 6".
2. REINFORCING SHALL CONFORM TO ASTM DESIGNATION A15 AND A305.
3. TROWEL SMOOTH SURFACES AND BRUSH FINISH. ROUND ALL EDGES.

GENERAL NOTES:

1. UTILITY VAULT PAD #4872SLB6-1430CLARK

Rev 4: New pad dimensions for 200 amp 1Ø underground metering enclosure

Clark Public Utilities

CONSTRUCTION STANDARDS

UNDERGROUND PRIMARY METERING PAD
SINGLE PHASE
200 AMP

REVISIONS

R	DATE	ENGR	OPS
1	3/02	REDRAWN	IN CAD
2	7/15/02	JEH	TR
3	8/2/05	LB	AH
4	12/19/07	LB	AH

PAGE:		CAD FILE:	APP: ELM	SECTION
1 of 1	M7	M7	DATE: 1/31/80	900

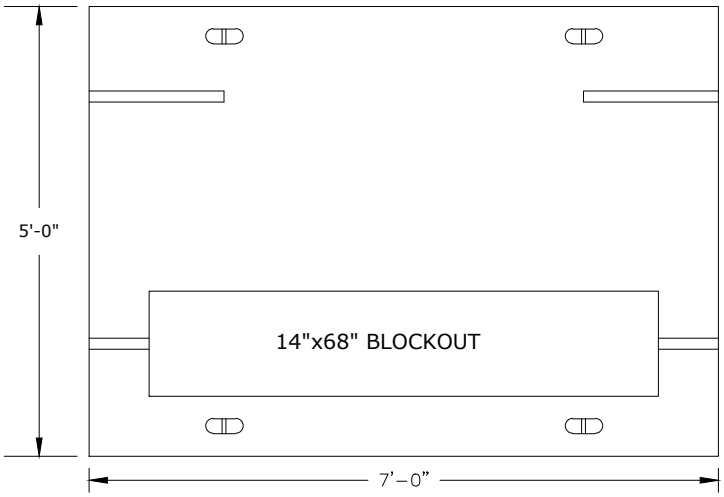

TOP VIEW

FRONT VIEW

1. All concrete shall be 2500 PSI and have a slump of 4" to 6".
2. Reinforcing shall conform to ASTM designation A15 and A305.
3. Trowel smooth surfaces and brush finish. Round all edges.

GENERAL NOTES:

1. Pad = 2,130 lb
2. Oldcastle pad #6084SLB6-1468-Clark.
3. Use template for conduit placement.

Rev 3: Changed to lighter (2130 vs 4769 lb) and smaller pad

ITEM NO.	DESCRIPTION	M8 QTY	M8 S/N
1	Pad, Primary Metering Module, Concrete, 5' x 7' w/ 14" x 68" Blockout	1	2332

Clark Public Utilities

CONSTRUCTION STANDARDS

UNDERGROUND PRIMARY METERING PAD
THREE PHASE
200 AND 600 AMP

REVISIONS

R	DATE	ENGR	OPS
1	6/18/10	KJP	
2	12/21/14	KJP	
3	11/19/20	CM	GM

PAGE: 1 of 1

M8

CAD FILE: M8

APP: LB/AH
DATE: 12/19/07

SECTION 900

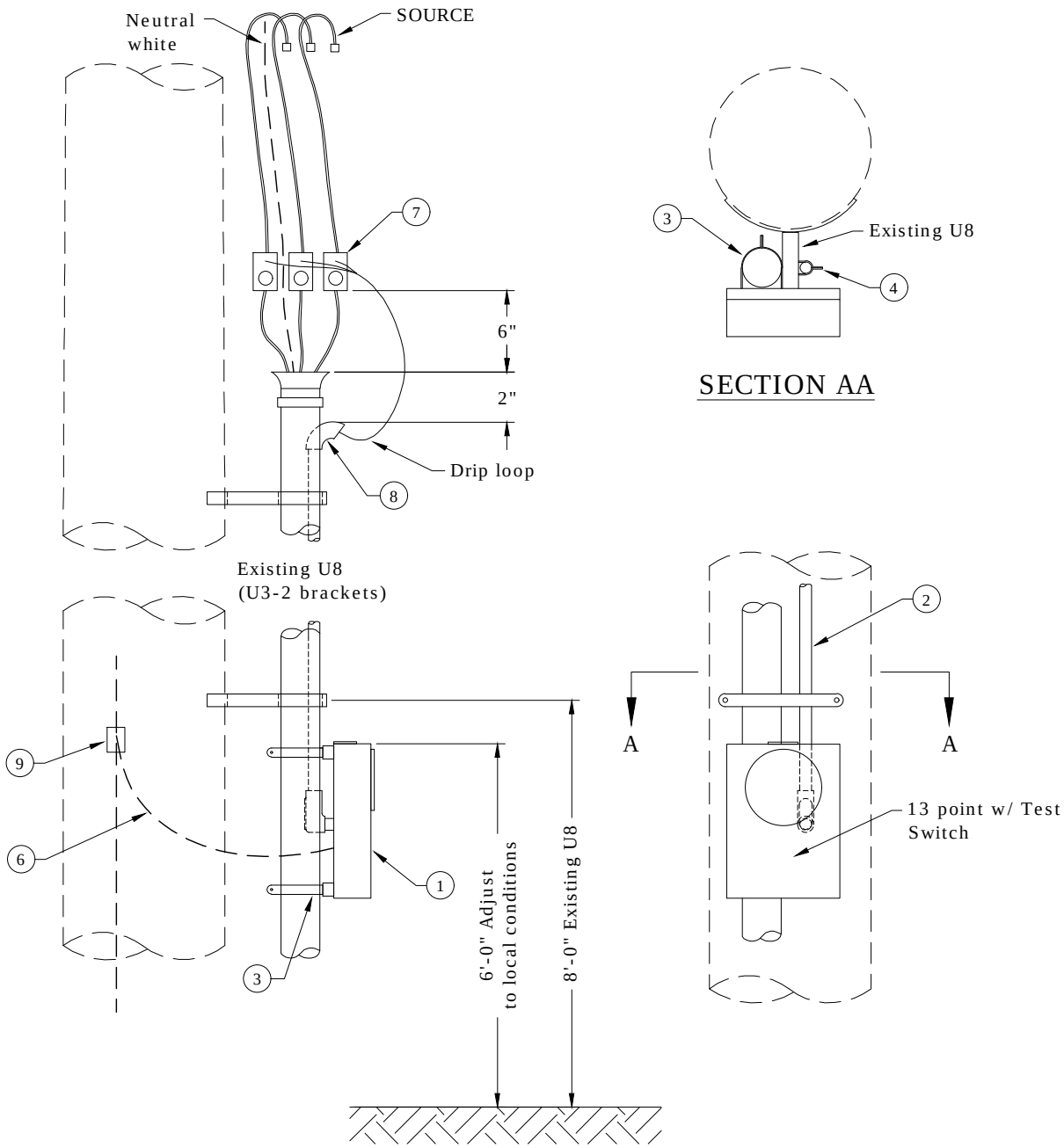

R2 - Minor drawing changes

ITEM NO.	DESCRIPTION	M16 QTY.	M16 S/N
1	Meter base, Superior, w/ channel 1 1/2" x 1 1/2", from Meter Dept.	1	MM1
2	LB, from Meter Dept.	1	MM1
3	Strap, Pipe 3" HW	2	1243
4	Strap, Pipe 1" HW	2	1239
5	Conduit, Schedule 80 PVC 1" x 10'	20	2482
6	Conductor, BSDC 4SLD 1C	10	376
7	Transformer, current, from Meter Dept.	3	MM1
8	Weatherhead 1", from Meter Dept.	1	MM1
9	Connector, crimpet Cu 4/4 - 6/6	1	452

Clark Public Utilities

CONSTRUCTION STANDARDS

SECONDARY METERING INSTALLATION
POLE MOUNTED - 3 PHASE, 4 WIRE

REVISIONS

R	DATE	ENGR	OPS
1	3/02	Redrawn	In Cad
2	7/15/02	JEH	TR

1

PAGE: 1 of 1 | M16 | CAD FILE: M16 | APP: ELM | DATE: 1/31/80 | SECTION 900

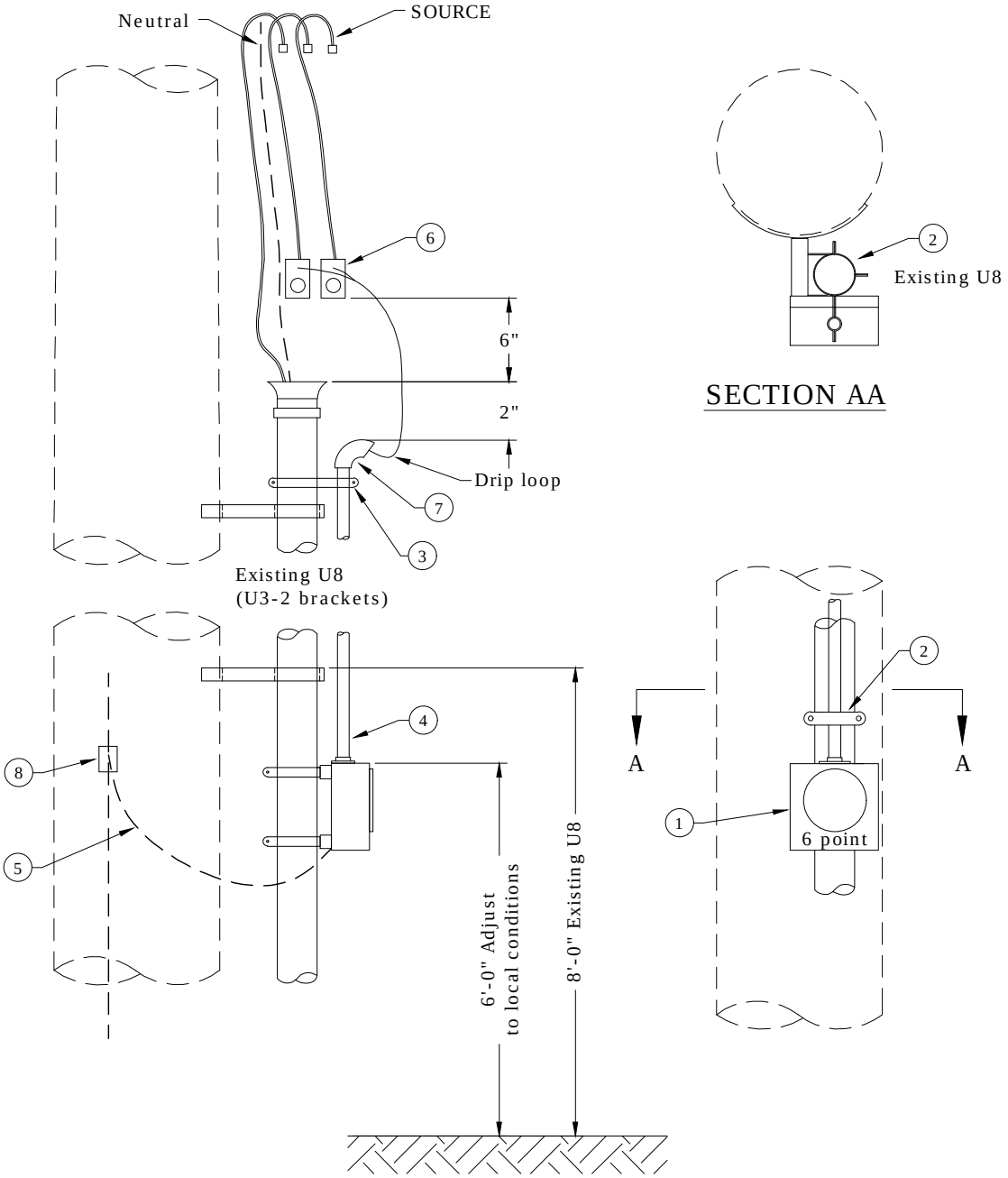

R2 - Minor drawing changes

ITEM NO.	DESCRIPTION	M17 QTY.	M17 S/N
1	Meter base w/ channel 3/4" x 1 1/2" from Meter Dept.	1	MM1
2	Strap, Pipe 3" HW	2	1243
3	Conduit band from Meter Dept.	2	MM1
4	Conduit, Schedule 80 PVC 3/4" x 10'	20	2221
5	Conductor, BSDC 4SLD 1C	10	376
6	Transformer, current, from Meter Dept.	2	MM1
7	Weatherhead 3/4", from Meter Dept.	1	MM1
8	Connector, crimpet, Cu 4/4 - 6/6	1	452

Clark Public Utilities

CONSTRUCTION STANDARDS

SECONDARY METERING INSTALLATION
POLE MOUNTED - 1 PHASE, 3 WIRE

REVISIONS

R	DATE	ENGR	OPS
1	3/02	Redrawn	In Cad
2	7/15/02	JEH	TR

1

PAGE: 1 of 1 | M17 | CAD FILE: M17 | APP: ELM | DATE: 1/31/80 | SECTION 900

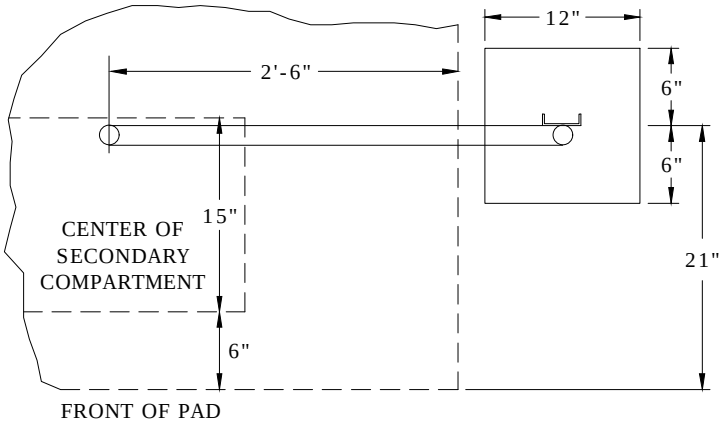

PLAN VIEW
TRANSFORMER PAD & METER FOOTING

Notes:

1. CIRCLE AW 121413 OR EQUIVALENT. METER BASE, 13 POINT, W/SPACE FOR TEST SWITCH.
2. CT's WILL BE FURNISHED BY CPU. ✡
3. CUSTOMER WILL INSTALL ASSEMBLY WHEN TRANSFORMER & PAD ARE INSTALLED.
4. CUSTOMER TO POUR CONCRETE FOOTING FOR METER.
5. MAY BE REDUCED TO 4' PROVIDED NOT LESS THAN FLUSH WITH TOP OF TRANSFORMER.
6. THIS INSTALLATION SHALL BE USED ONLY WHEN IT IS IMPRACTICAL TO INSTALL THE METER ON THE BUILDING AND ONLY AFTER DISTRICT APPROVAL.

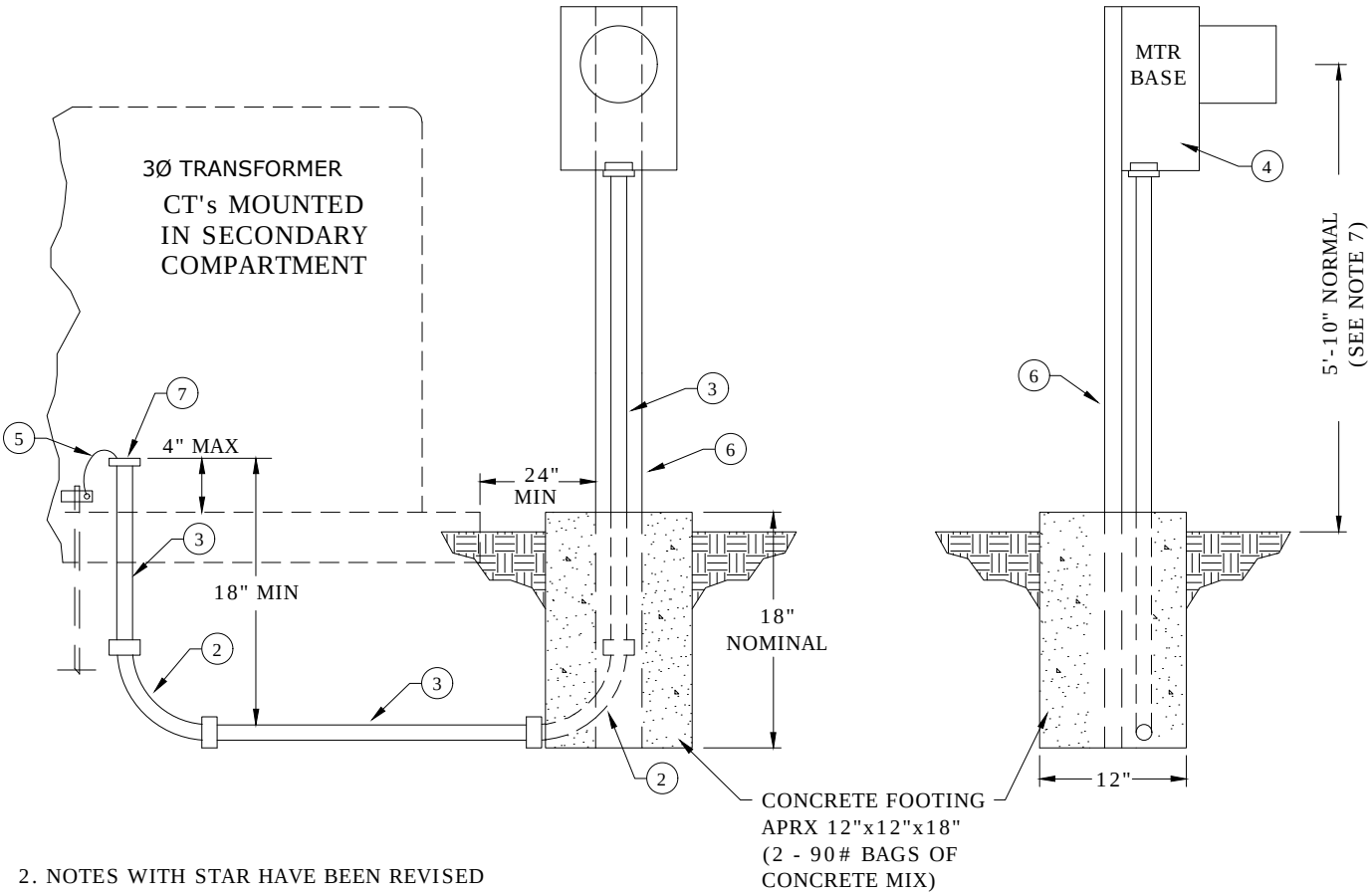

2. NOTES WITH STAR HAVE BEEN REVISED
1. REMOVED CT CAN

ITEM NO.	DESCRIPTION	M20 QTY.	M20 S/N
1	Locknut 1"	3	---
2	Ell-90° Cond. 1" Rigid or Sch. 80 PVC	2	---
3	Conduit 1" Rigid or Sch. 80 PVC	Ft.	---
4	Meter Base W/ Test Block - See Note 1	1	---
5	Ground Wire #6 Cu	Ft.	---
6	Channel Support 3" x 8" x 3/8", 5'6"	1	---
7	Bushing Conduit Grounding	4	---

Clark Public Utilities

CONSTRUCTION STANDARDS

PAD & ASSEMBLY
SECONDARY METERING
FOR PADMOUNT TRANSFORMER

REVISIONS

R	DATE	ENGR	OPS
1	2/22/00	HWH	MA
2	8/1/00		

1

PAGE: 1 of 1 | M20 | CAD FILE: M20 | APP: | DATE: 1/31/80 | SECTION 900

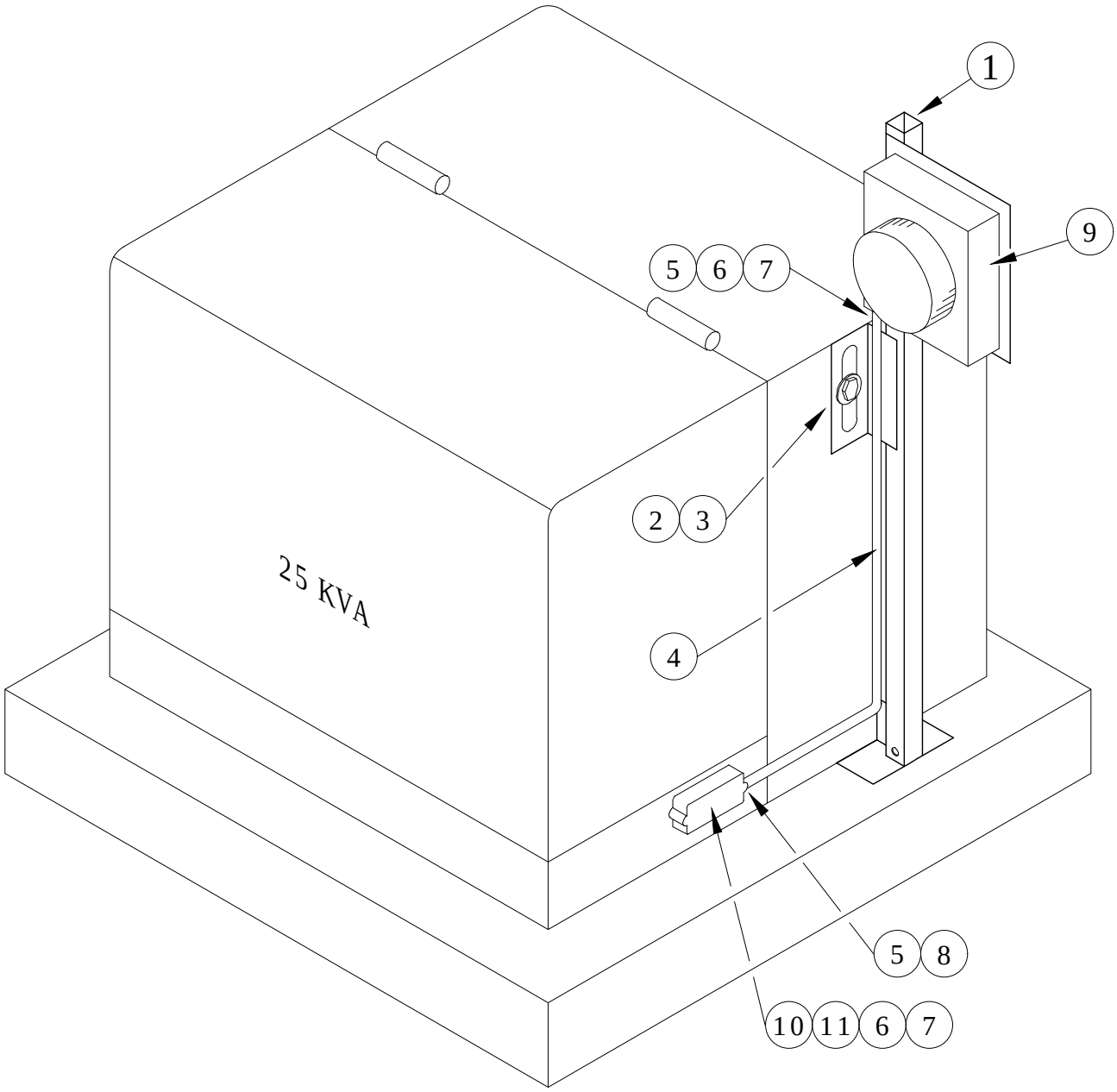

* M.D.S. MEANS METER DEPARTMENT STOCK

ITEM NO.	DESCRIPTION	M23 QTY.	M23 S/N
1	CT METER BASE SUPPORT DRAWING MBCT	1	M.D.S. *
2	MACHINE BOLT 5/8" X 1"	1	138
3	WASHER, FLAT, ROUND, GALV, 5/8"	1	1395
4	CONDUIT, PVC, SCH. 40, 3/4"	43"	1564
5	ADAPTER, PVC, MALE, 3/4"	1	M.D.S. *
6	BUSHING, INSULATED, 3/4"	1	2027
7	LOCKNUT, 3/4"	2	M.D.S. *
8	CONDULET, L.B., 3/4"	10'	M.D.S. *
9	METER BASE, 6, TERMINAL	1	M.D.S. *
10	REDUCER, 3/4" X 2"	1	M.D.S. *
11	NIPPLE, 3/4", CLOSE	1	M.D.S. *

Clark Public Utilities

CONSTRUCTION STANDARDS

DISTRICT INSTALLED
CT METERING AT PADMOUNT
TRANSFORMER

REVISIONS

R	DATE	ENGR	OPS
1	2/23/00	HWH	MA

PAGE: 1 of 1

M23

CAD FILE: M23

APP:

DATE: 4/92

SECTION 900

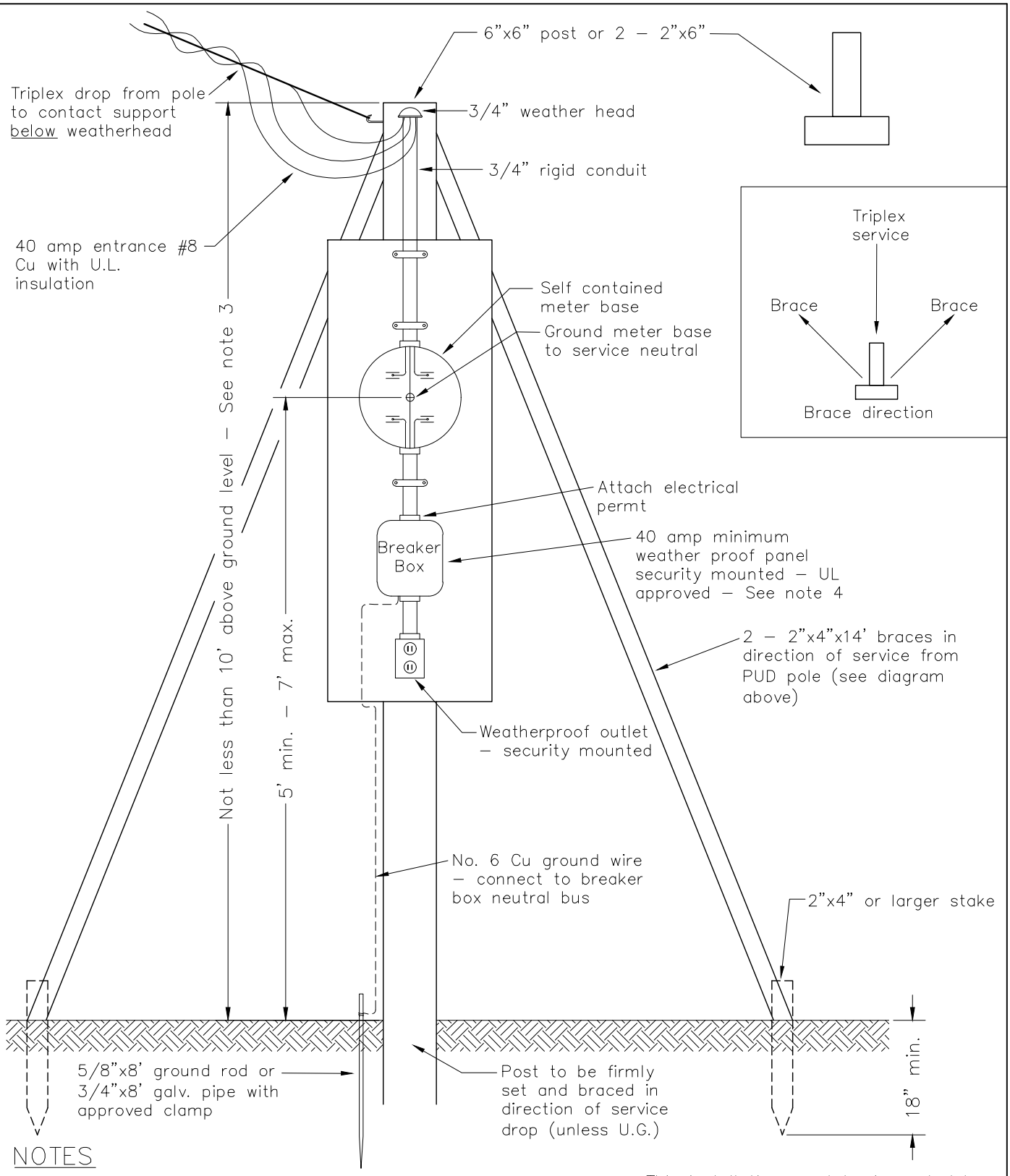

NOTES

1. Install service and support 3' from pedestal for U.G. service.
2. Ground equipment per state and local code requirements.
3. Service must clear driveways 12' and streets 18'.
4. Panel circuit breakers must have 10,000 amp interrupting rating.
5. DO NOT attach to district poles.

This installation must be inspected by the Dept. of Labor & Industries before Clark Public Utility can energize.

Dept. of Labor & Industries, 896–2350
City of Vancouver, 696–8105

Clark Public Utilities

CONSTRUCTION STANDARDS

LAYOUT FOR TEMPORARY ELECTRICAL SERVICE 120/240V - 3 WIRE

REVISIONS

R	DATE	ENGR	OPS
1	3/02		

1 Redrawn In Cad

PAGE:		CAD FILE:	APP:	SECTION
1 of 1	M28	M28	DATE: 1965	900

TRIPOD DETAIL

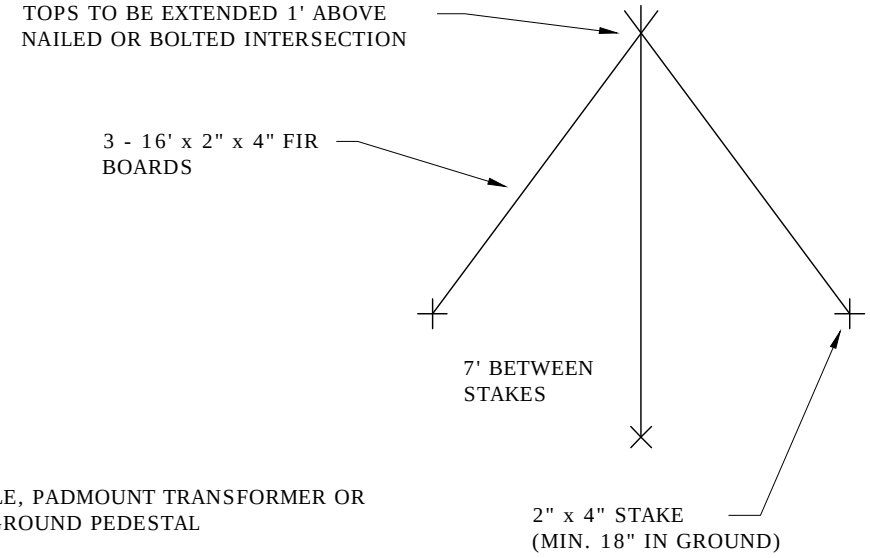

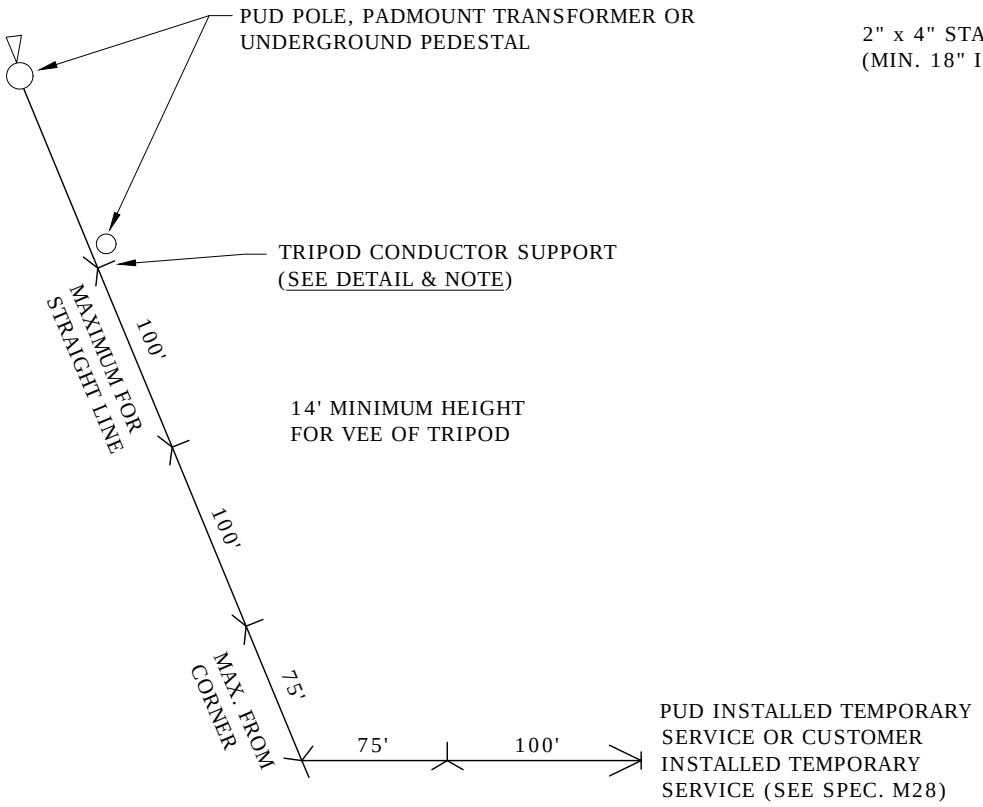

Note: IF SERVICE CROSSES A ROADWAY, USE 24' x 2" x 6" FIR BOARDS FOR TRIPODS & PLACE ADJACENT TO ROADWAY TO REDUCE CONDUCTOR SPAN & PROVIDE MINIMUM OF 18' CLEARANCE (CHECK WITH PUD ENGINEER IF SERVICE ROUTE CROSSES STATE HIGHWAY).

TO BE USED ONLY WITH DISTRICT APPROVAL

Clark Public Utilities

CONSTRUCTION STANDARDS

CONDUCTOR SUPPORTS
FOR TEMPORARY ELECTRIC SERVICE

REVISIONS

R	DATE	ENGR	OPS
1	3/02		

1 Redrawn In Cad

PAGE:		CAD FILE:	APP:	SECTION
1 of 1	M28A	M28A	DATE: 8/76	900

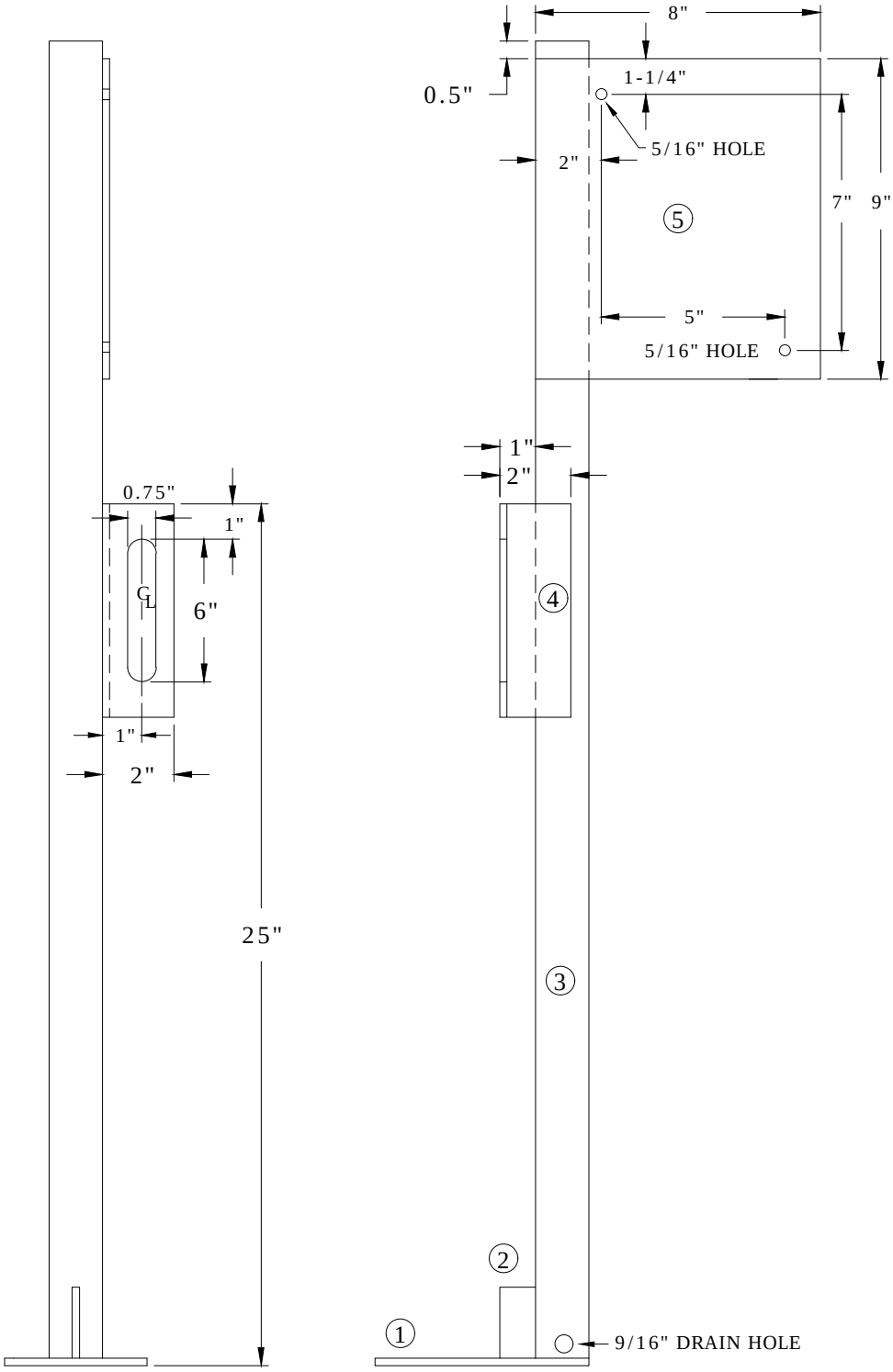

NOTE: HOT DIP GALVANIZE AFTER FABRICATION

ITEM NO.	DESCRIPTION	MBCT QTY.	MBCT S/N
1	Plate, Steel Base, 4" x 6" x 1/8"	-	--
2	Plate, Steel Spacer, 1" x 2" x 1/8"	-	--
3	Tube, 1/8" Square, 1 1/2" x 36"	-	--
4	Angle Steel, 1/8" Thick, 2" x 2" x 8"	-	--
5	Plate, Steel, 8" x 9" x 1/8"	-	--

Clark Public Utilities

CONSTRUCTION STANDARDS

CT METER BASE SUPPORT FOR PADMOUNT TRANSFORMER

REVISIONS

R	DATE	ENGR	OPS
1	2/23/00	HWH	MA

PAGE: 1 of 1

MBCT

CAD FILE: MBCT

APP:

DATE: 4/22

SECTION 900

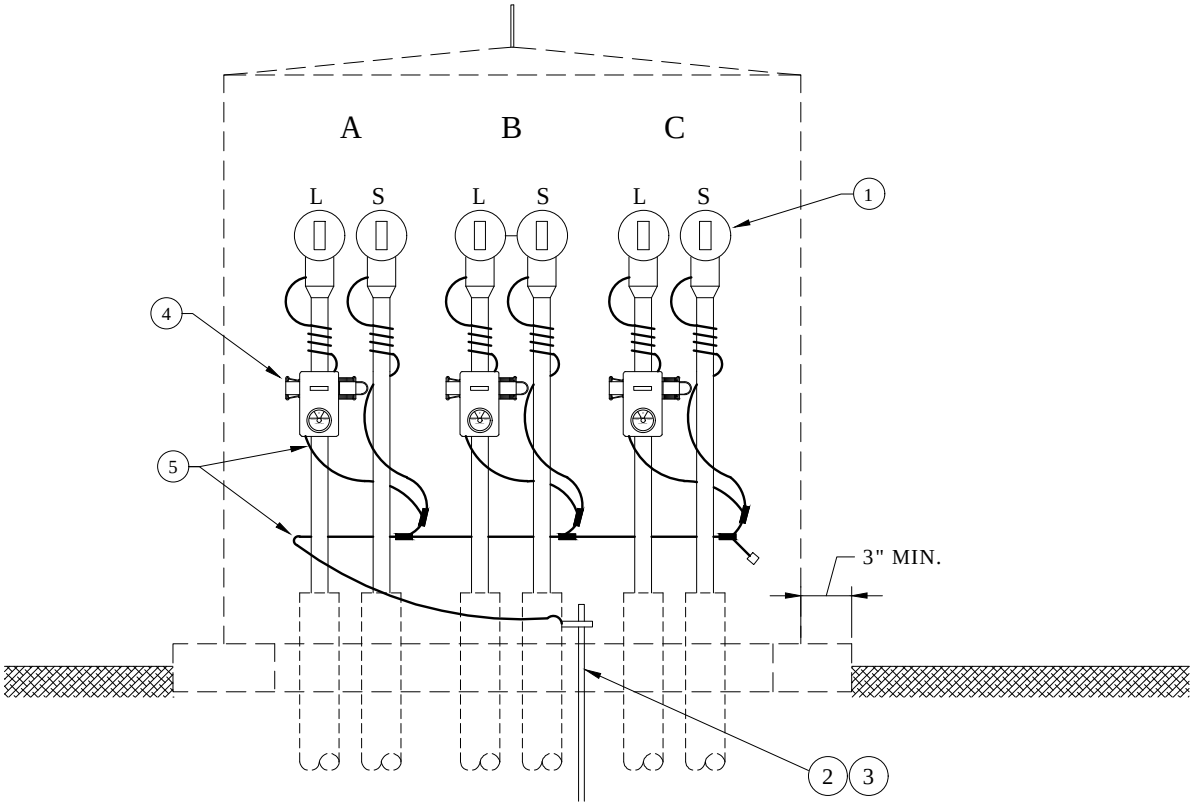

ELEVATION
FRONT VIEW

ALL NEUTRAL EXTENSIONS SHALL BE #2 B.C.

NOTE: PRIMARY METER ENCLOSURE IS NOT A STOCK ITEM. FOR A REPLACEMENT FOR CPU MAINTENANCE, A "PURCHASE REQUISITION" MUST BE GENERATED BY THE ENGINEER FOR PURCHASING. PURCHASING WILL GENERATE THE "PURCHASE ORDER." A COPY OF THE SPECIFICATION FOR THE ENCLOSURE IS IN THE METERING MANUAL.

REV 2: CHANGED TO CURRENT-RESET FAULT INDICATORS & ADDED NOTES

ITEM NO.	DESCRIPTION	UM1	
		QTY.	S/N
1	Terminator, Elbow L.B. 200A	6	1312
2	Clamp, Ground Rod 5/8" SML	1	281
3	Clamp, Ground Rod 5/8" x 8'	1	1124
4	Fault Indicator	3	2581 ✲
5	Conductor, Copper, #2 Sol. BCSD	40	1553

Clark Public Utilities

CONSTRUCTION STANDARDS

PRIMARY 3 PHASE
METERING ENCLOSURE

REVISIONS

R	DATE	ENGR	OPS
1	2/23/00	HWH	MA
2	8/2/05	LB	AH
1			

PAGE: 1 of 1

UM1

CAD FILE: UM1

APP:

DATE: 9/94

SECTION 900

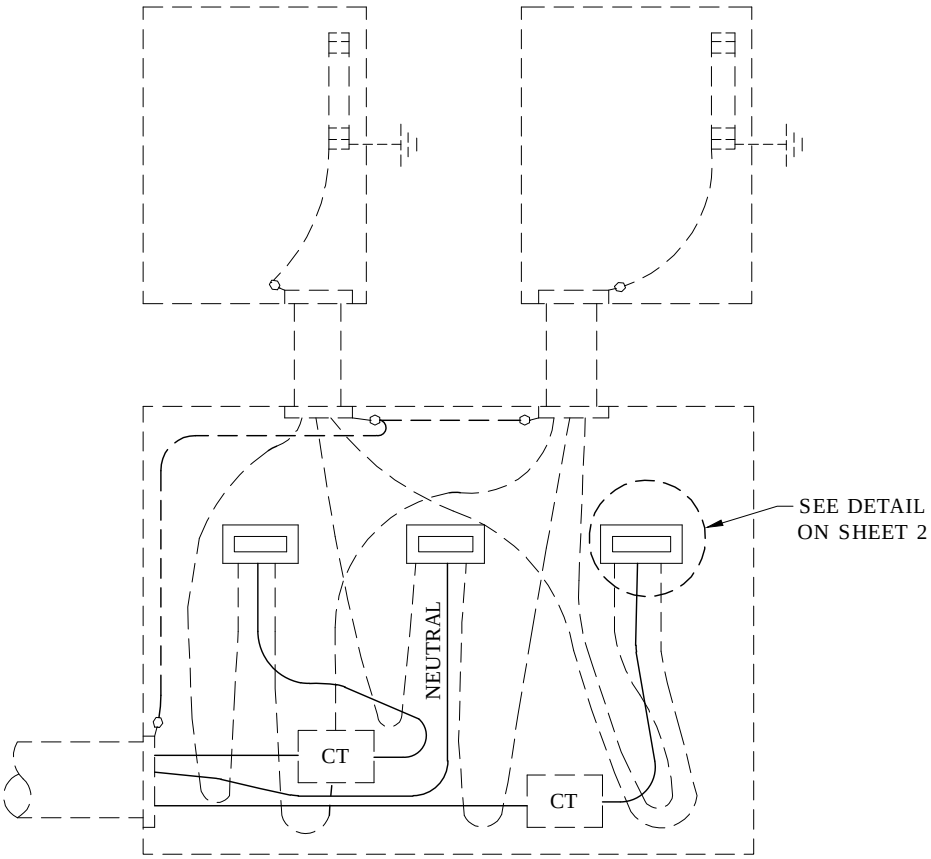

C.T. CAN
FRONT VIEW

NOTE: FOR CONDUCTORS 1/0 TO 350 KCM ALUMINUM

REV 1. NOTES FOLLOWED BY STAR HAVE BEEN REVISED
REV 2. REMOVED 3Ø FROM TITLE AND CORRECTED NOTE & MATERIAL ISSUE

Clark Public Utilities

CONSTRUCTION STANDARDS

SECONDARY 1Ø
CT METERING ASSEMBLIES
RESIDENTIAL

REVISIONS

R	DATE	ENGR	OPS
1	2/23/00	HWH	MA
2	8/2/05	LB	AH

1

PAGE:		CAD FILE:	APP:	SECTION
1 of 2	UMS4,UMS6,UMS34,UMS36	UMS4	DATE: 9/94	900

MAX. NO. OF SECONDARY TRIPLEX CONDUCTORS 4

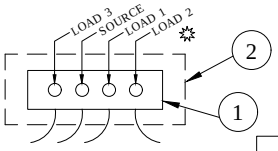

UMS 4

MAX. NO. OF SECONDARY TRIPLEX CONDUCTORS 6

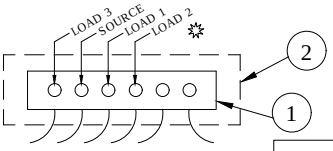

UMS 6

MAX. NO. OF SECONDARY QUADRUPLEX CONDUCTORS 4

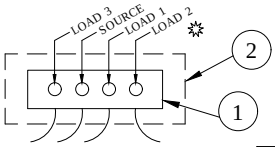

UMS 34

MAX. NO. OF SECONDARY QUADRUPLEX CONDUCTORS 6

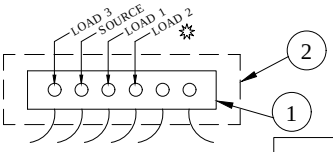

UMS 36

REV 2. REMOVED 3Ø FROM TITLE AND CORRECTED NOTE & MATERIAL ISSUE

ITEM NO.	DESCRIPTION	UMS4 QTY.	UMS4 S/N
1	Connector, Pedestal 4	3	528
2	Cover, Connector	3	573 ✲

ITEM NO.	DESCRIPTION	UMS6 QTY.	UMS6 S/N
1	Connector, Pedestal 6	3	531
2	Cover, Connector	3	574

ITEM NO.	DESCRIPTION	UMS34 QTY.	UMS34 S/N
1	Connector, Pedestal 4	4	528
2	Cover, Connector	4	573 ✲

ITEM NO.	DESCRIPTION	UMS36 QTY.	UMS36 S/N
1	Connector, Pedestal 6	4	531
2	Cover, Connector	4	574

Clark Public Utilities

CONSTRUCTION STANDARDS

SECONDARY 1Ø
CT METERING ASSEMBLIES
RESIDENTIAL

REVISIONS

R	DATE	ENGR	OPS
1	2/23/00	HWH	MA
2	8/2/05	LB	AH

1

PAGE: 2 of 2

UMS4,UMS6,UMS34,UMS36

CAD FILE: UMS4

APP:

DATE: 9/94

SECTION 900

1000
STREETLIGHTING

2/10/2025

~	DLLED	Decorative LED Area Lighting, Single Acorn, Fiberglass Pole
~	DLTLED	Decorative LED Area Lighting, Twin Acorn, Fiberglass Pole
~	DLSH	Decorative HPS Area Lighting, Shepherds Hook Fiberglass Pole, For Maintenance Only
~	FL200LED-FL400LED	Area LED Light, Floodlight, Wood Pole Mounted
~	HLLED	Area LED Light, High Light, Wood Pole Mounted
~	SL	General Streetlighting, Light Patterns
~	SL100LED-SL200LED	Streetlight, 100/200W Equiv. LED Cobrahead, Wood Pole Mounted
~	SL100ALED-SL200ALED	Streetlight, 100/200W Equiv. LED Cobrahead, Single Arm, Aluminum Pole, Direct Burial
~	SL100SALED	Streetlight, 100W Equiv. LED Cobrahead, Short Mast Arm, Aluminum Pole, Direct Burial
~	SL100SFLED-SL200SFLED	Streetlight, 100/200W Equiv. LED Cobrahead, Single Arm, Aluminum Pole, Anchor Base
~	SL200SFDLED	Streetlight, 200W Equiv. LED Cobrahead, Twin Arm, Aluminum Pole, Anchor Base
~	SLARM6-SLARM22	Streetlight, Mast Arm Installation, Wood Pole Mounted
~	SLF	Streetlight Foundation, Steel - 6” Diameter
~	SLPT	Streetlight Pole Tagging
~	SLR	Secondary Overhead to Underground Riser Assembly, For Streetlight Feeder
N	SLJUMOD	Streetlight Joint Use Modification for NESC Clearance Reduction

N New Standard
R Redrawn Standard
C Changed Standard
~ No Change

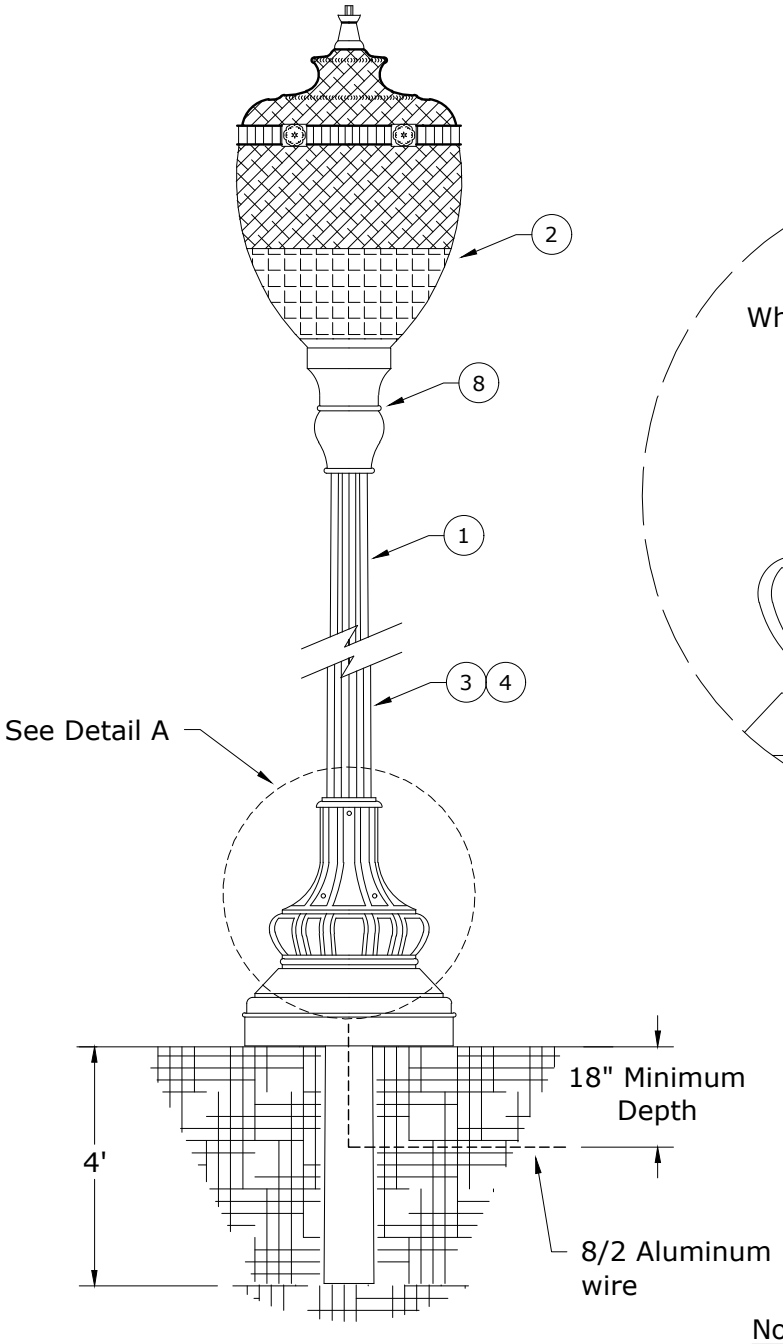

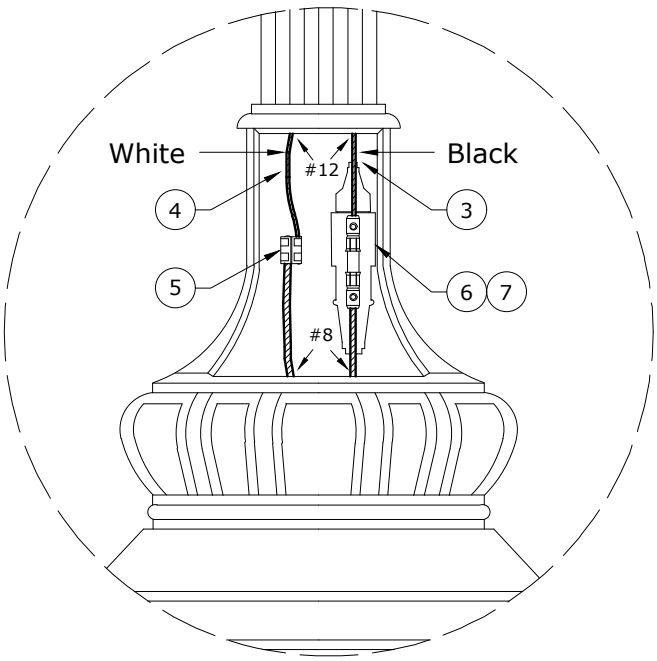

Detail A

Notes: Installation meets NESC not NEC.

ITEM NO	DESCRIPTION	DLLED	
		QTY	S/N
1	Pole, Streetlight, Fiberglass, Direct Burial, 14.5' Mounting Height, Fluted Shaft, Clamshell Base	1	2219
2	Luminaire, Post Top Acorn, LED, 60W, 120V, Type 3, 3000K	1	2845
3	Cable, 600V, Cu, #12, 19-Str, Black, 1C	25 ft	386
4	Cable, 600V, Cu, #12, 19-Str, White, 1C	25 ft	387
5	Connector, H-Tap, Al/Cu, Run #6-#2 Str - Tap #14-#8 Str	1	416
6	Fuse, 10A, 250V, Time Delay, Streetlight	1	2389
7	Holder, Fuse, Streetlight	1	2388
8	Photoeye, LED and HPS, 120V, 3-pin	1	2872

Clark Public Utilities

CONSTRUCTION STANDARDS

DECORATIVE LED AREA LIGHTING
SINGLE ACORN
FIBERGLASS POLE

REVISIONS

R	DATE	ENGR	OPS

PAGE: 1 of 1

DLLED

CAD FILE: DLLED

APP: DRK/KJP

DATE: 6/1/22

SECTION 1000

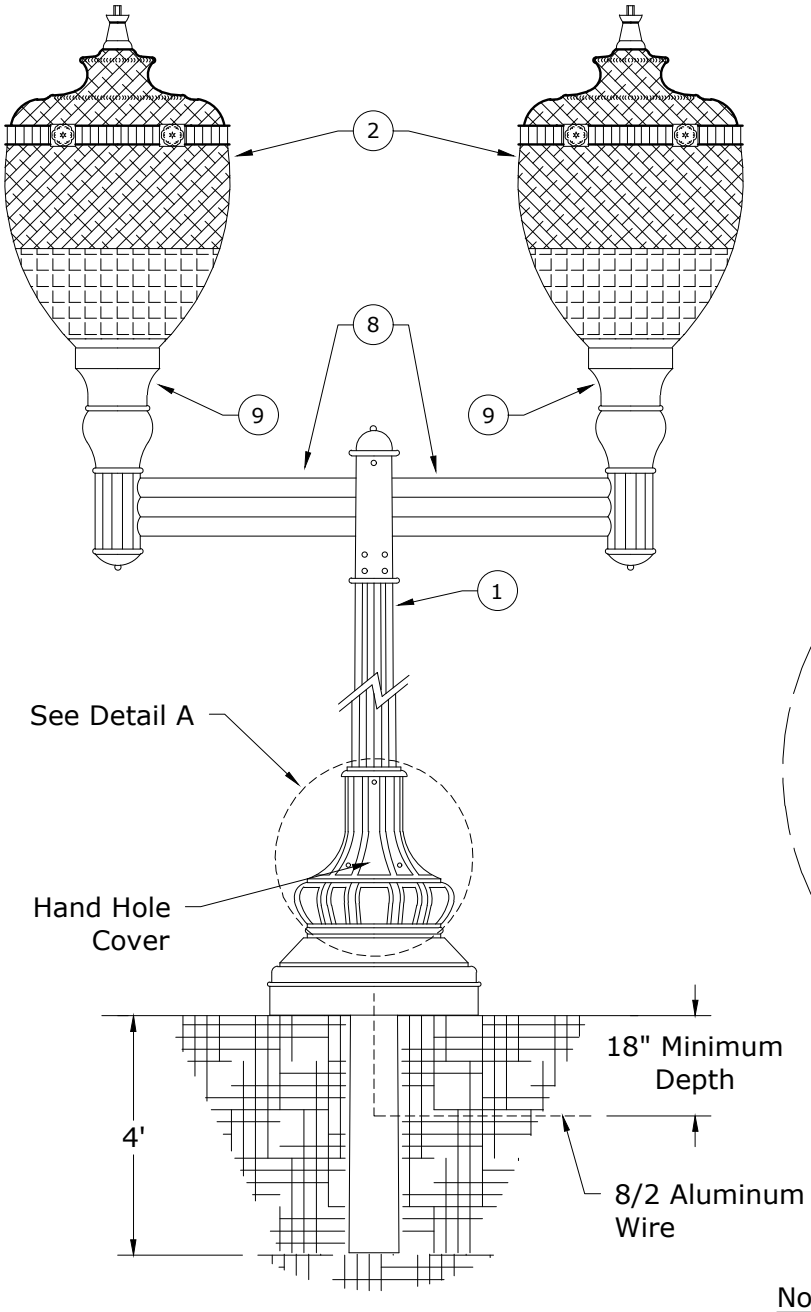

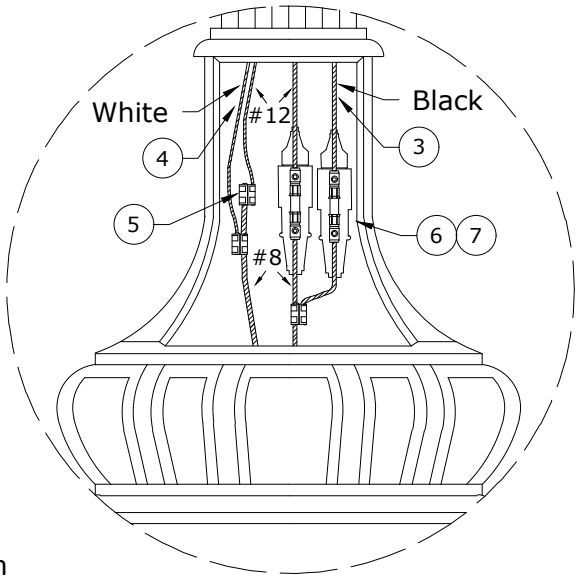

Detail A

Notes: Installation meets NESC not NEC.

ITEM NO	DESCRIPTION	DLTLED	
		QTY	S/N
1	Pole, Streetlight, Fiberglass, Direct Burial, 14.5' Mounting Height, Fluted Shaft, Clamshell Base	1	2219
2	Luminaire, Post Top Acorn, LED, 60W, 120V, Type 3, 3000K	2	2845
3	Cable, 600V, Cu, #12, 19-Str, Black, 1C	25 ft	386
4	Cable, 600V, Cu, #12, 19-Str, White, 1C	25 ft	387
5	Connector, H-Tap, AL/CU, Run #6-#2 Str - Tap #14-#8 Str	3	416
6	Fuse, 10A, 250V, Time Delay, Streetlight	2	2389
7	Holder, Fuse, Streetlight	2	2388
8	Arm, Twin Fixture, 3" O.D. x 2-7/8" Tenon, Black	1	2200
9	Photoeye, LED and HPS, 120V, 3-pin	2	2872

Clark Public Utilities

CONSTRUCTION STANDARDS

DECORATIVE LED AREA LIGHTING
TWIN ACORN
FIBERGLASS POLE

REVISIONS

R	DATE	ENGR	OPS

PAGE: 1 of 1

DLTLED

CAD FILE: DLTLED

APP: DRK/KJP

DATE: 6/1/22

SECTION 1000

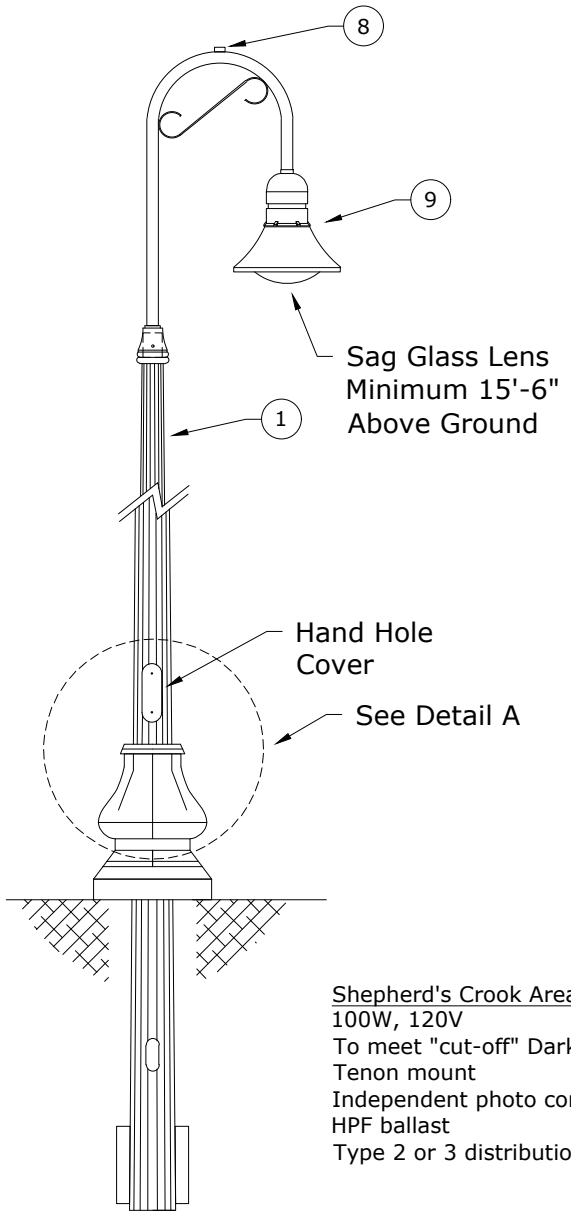

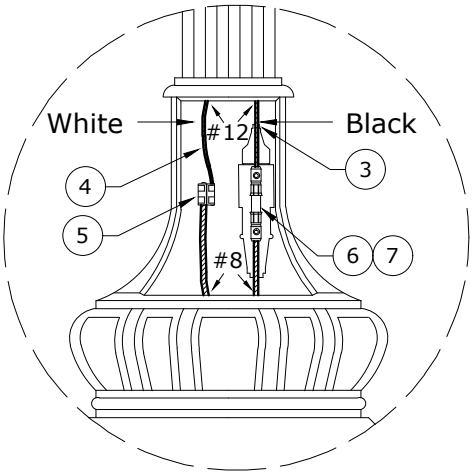

Detail A

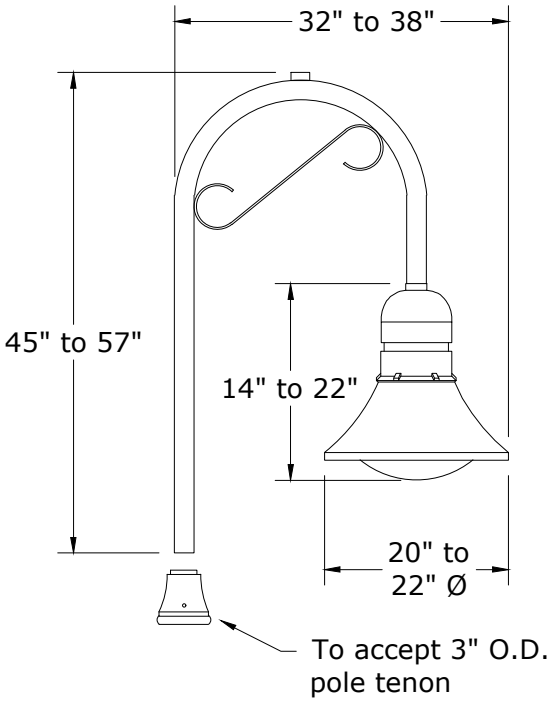

Shepherd's Crook Area Light Specifications
100W, 120V
To meet "cut-off" Dark Skies designation
Tenon mount
Independent photo control
HPF ballast
Type 2 or 3 distribution pattern

Notes:

1. For maintenance only.
2. Dimensions are approximate.
3. Color: Black matte or semi-gloss.

ITEM NO	DESCRIPTION	DLSH	
		QTY	S/N
1	Pole, Streetlight, Fiberglass, Direct Burial, 14.5' Mounting Height, Fluted Shaft, Clamshell Base	1	2219
2	Luminaire, Shepherd Hook, HPS, 100W 120V, Med. Base, Type 2&3	1	2565
3	Cable, 600V, Cu, #12, 19-Str, Black, 1C	35 ft	386
4	Cable, 600V, Cu, #12, 19-Str, White, 1C	35 ft	387
5	Connector, H-Tap, Al/Cu, Run #6-#2 Str - Tap #14-#8 Str	1	416
6	Fuse, 10A, 250V, Time Delay, Streetlight	1	2389
7	Holder, Fuse, Streetlight	1	2388
8	Photoeye, LED and HPS, 120V, 3-pin	1	2872
9	Lamp, HPS, 100W, 55V	1	1745

Clark Public Utilities

CONSTRUCTION STANDARDS

DECORATIVE HPS AREA LIGHTING
SHEPHERDS HOOK FIBERGLASS POLE
FOR MAINTENANCE ONLY

REVISIONS

R	DATE	ENGR	OPS
0	8/24/04	LB	AH
1	4/19/22	DRK	

PAGE: 1 of 1

DLSH

CAD FILE: DLSH

APP: WAH
DATE: 8/13/04

SECTION 2200

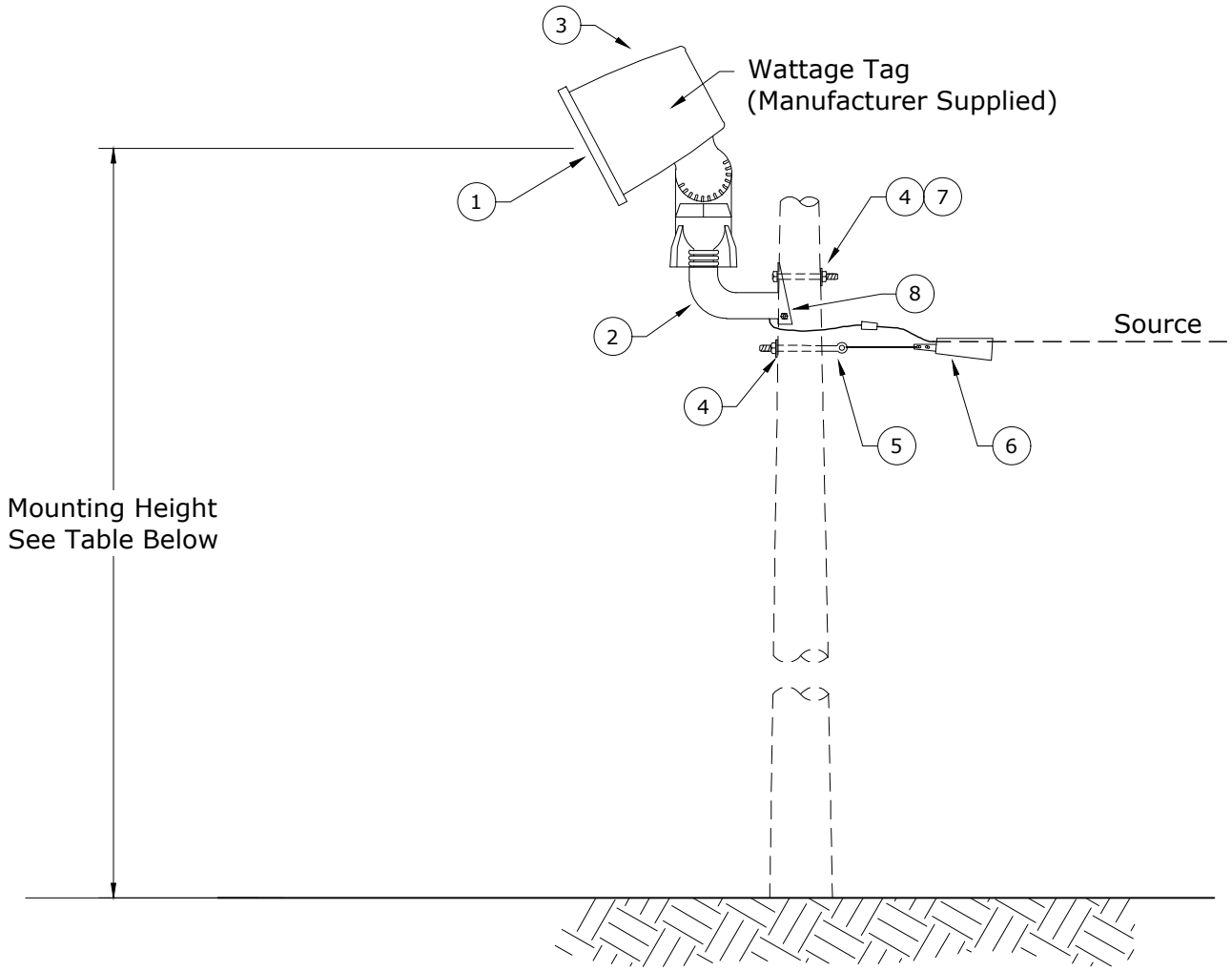

RECOMMENDED MOUNTING HEIGHTS			
TYPE	PREFERRED	MINIMUM	MAXIMUM
200W	30 ft	20 ft	32 ft
400W	35 ft	25 ft	37 ft

Notes: Installation meets NESC not NEC.

ITEM NO	DESCRIPTION	FL200LED		FL400LED	
		QTY	S/N	QTY	S/N
1	Luminaire, Floodlight, LED, 3000k, HPS-Equivalent	1	2906	1	2907
2	Bracket, Floodlight, PM1, Single Pole Mt.	1	211	1	211
3	Photoeye, LED and HPS, 120V, 3-pin	1	2872	1	2872
4	Washer, Square Flat 5/8" x 2 1/4" x 2 1/4"	2	1412	2	1412
5	Bolt, Eye, 5/8" x 12", Galv, 12,400 LB Ultimate Tensile	1	107	1	107
6	Clamp, Wedge #6-#2 ACSR, Solid Bail	1	310	1	310
7	Bolt, Machine, 5/8" x 12", Galv, 12,400 LB, Ultimate Tensile	1	155	1	155
8	Screw, Lag 1/2" x 3", Fetter Drive, Drive Point	2	1131	2	1131

Clark Public Utilities

CONSTRUCTION STANDARDS

AREA LED LIGHT
FLOODLIGHT
WOOD POLE MOUNTED

PAGE: 1 of 1

FL200LED, FL400LED

CAD FILE: FL200LED

REVISIONS			
R	DATE	ENGR	OPS

APP: DRK/KJP
DATE: 6/1/22

SECTION 1000

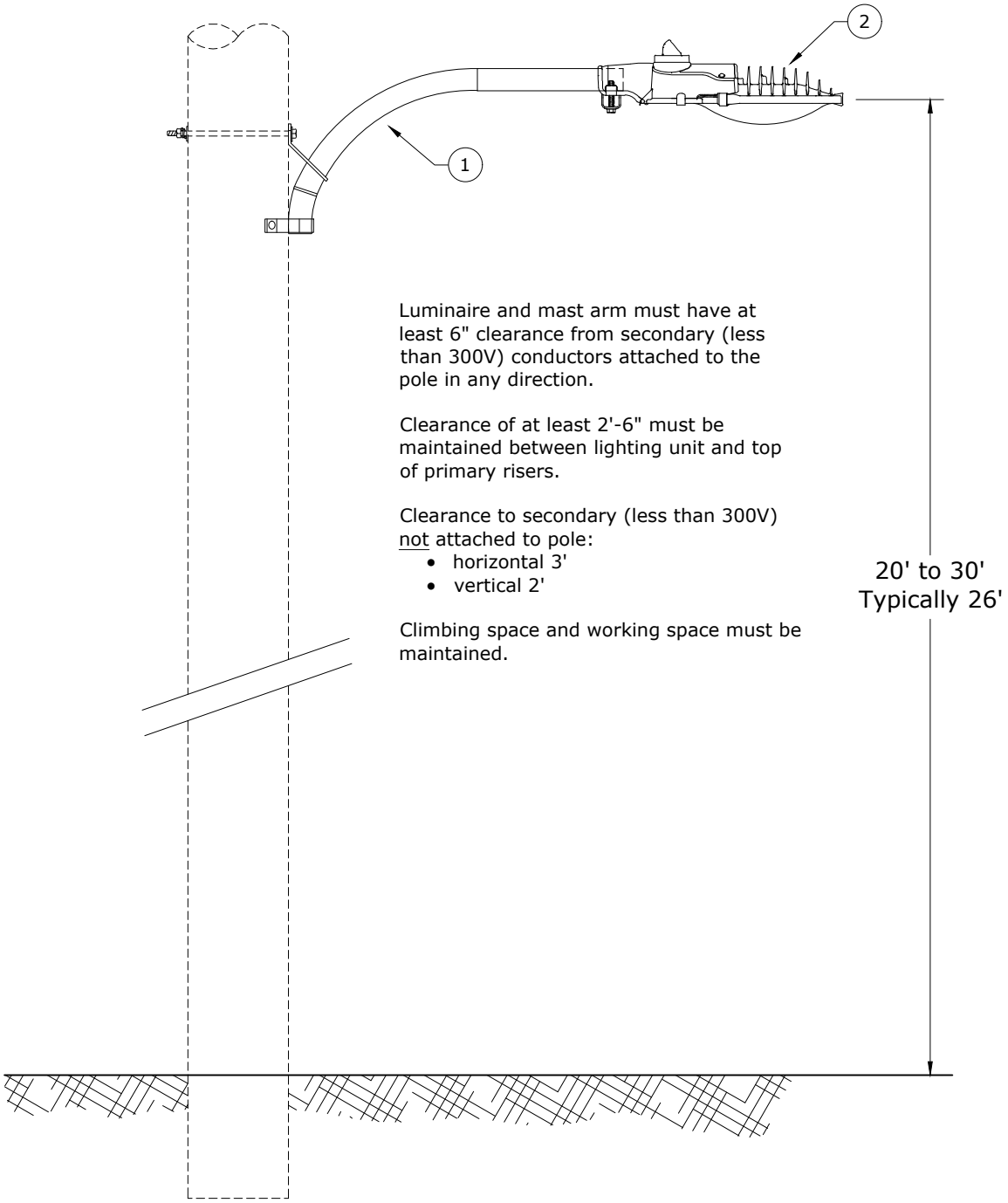

Luminaire and mast arm must have at least 6" clearance from secondary (less than 300V) conductors attached to the pole in any direction.

Clearance of at least 2'-6" must be maintained between lighting unit and top of primary risers.

Clearance to secondary (less than 300V) not attached to pole:

- horizontal 3'
- vertical 2'

Climbing space and working space must be maintained.

Notes: Installation meets NESC not NEC.

ITEM NO	DESCRIPTION	HLLED	
		QTY	S/N
1	Arm, Mast Al 2', Highlite, Wood Pole	1	44
2	Luminaire, High Light, LED, 3000K, Integrated Photoeye, HPS Equivalent	1	2890

Clark Public Utilities

CONSTRUCTION STANDARDS

AREA LED LIGHT
HIGH LIGHT
WOOD POLE MOUNTED

REVISIONS			
R	DATE	ENGR	OPS

PAGE: 1 of 1

HLLED

CAD FILE: HLLED

APP: DRK/KJP

DATE: 6/1/22

SECTION 1000

X. LIGHTING TYPES

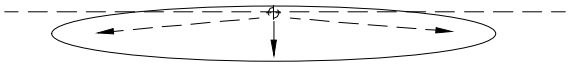

IES TYPE II

For use on narrow to medium width street using mast arm mounted luminaire. Mount at right angle (90°) with centerline of street. Not a CPU standard.

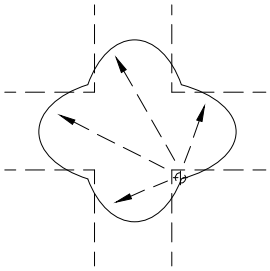

IES TYPE II 4-WAY

For use at intersections when only one mast arm mounted luminaire can be used. Mount luminaire as near as possible to center of intersection. Not a CPU standard.

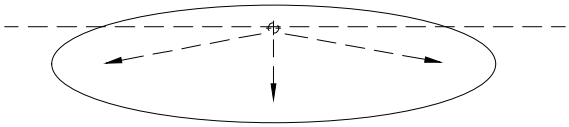

IES TYPE III

For use on wide width streets using mast arm mounted luminaires. Mount at right angle (90°) with centerline of street. Cobrahead and decorative acorns use this pattern.

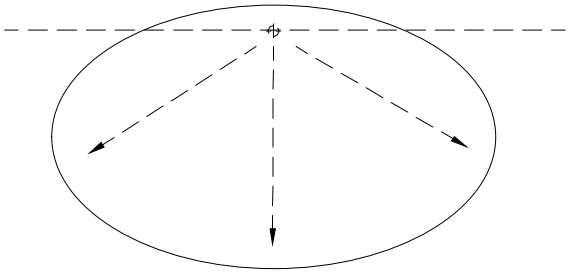

IES TYPE IV

For use in subdivision cul-de-sacs using specialized cobrahead luminaires. Aim luminaire as near as possible to center of cul-de-sac. Not a CPU standard.

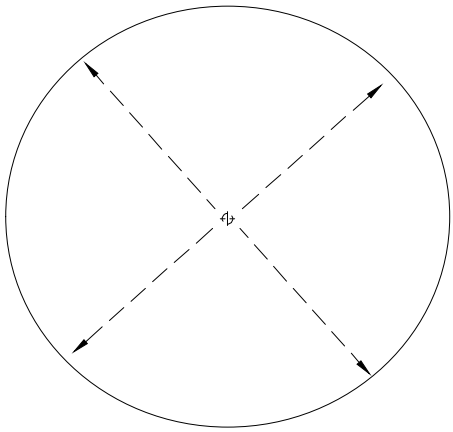

IES TYPE V

Yard lights (HLLED) use this pattern when located in center of area to be illuminated.

FLOODLIGHTS

1. To be used for parking lots, storage areas, etc. Not to be used for streetlighting.
2. Always take into account unintentional light trespass on surrounding areas prior to installation.
3. Floodlights used by CPU have a beam spread of 65° both vertically and horizontally.
4. Aiming of floodlight should be 1/2 to 2/3 of distance across area to be illuminated.

Rev. 2 - Added type of light to IES type and replaced Std. SL.

Clark Public Utilities

CONSTRUCTION STANDARDS

GENERAL STREETLIGHTING
LIGHT PATTERNS

REVISIONS

R	DATE	ENGR	OPS
0	2/23/00	HWH	MA
1	8/24/04	LB	AH
2	4/21/22	DRK	

PAGE: 1 of 1

SL

CAD FILE: SL

APP: HWH/RGH

DATE: 1/13/82

SECTION 1000

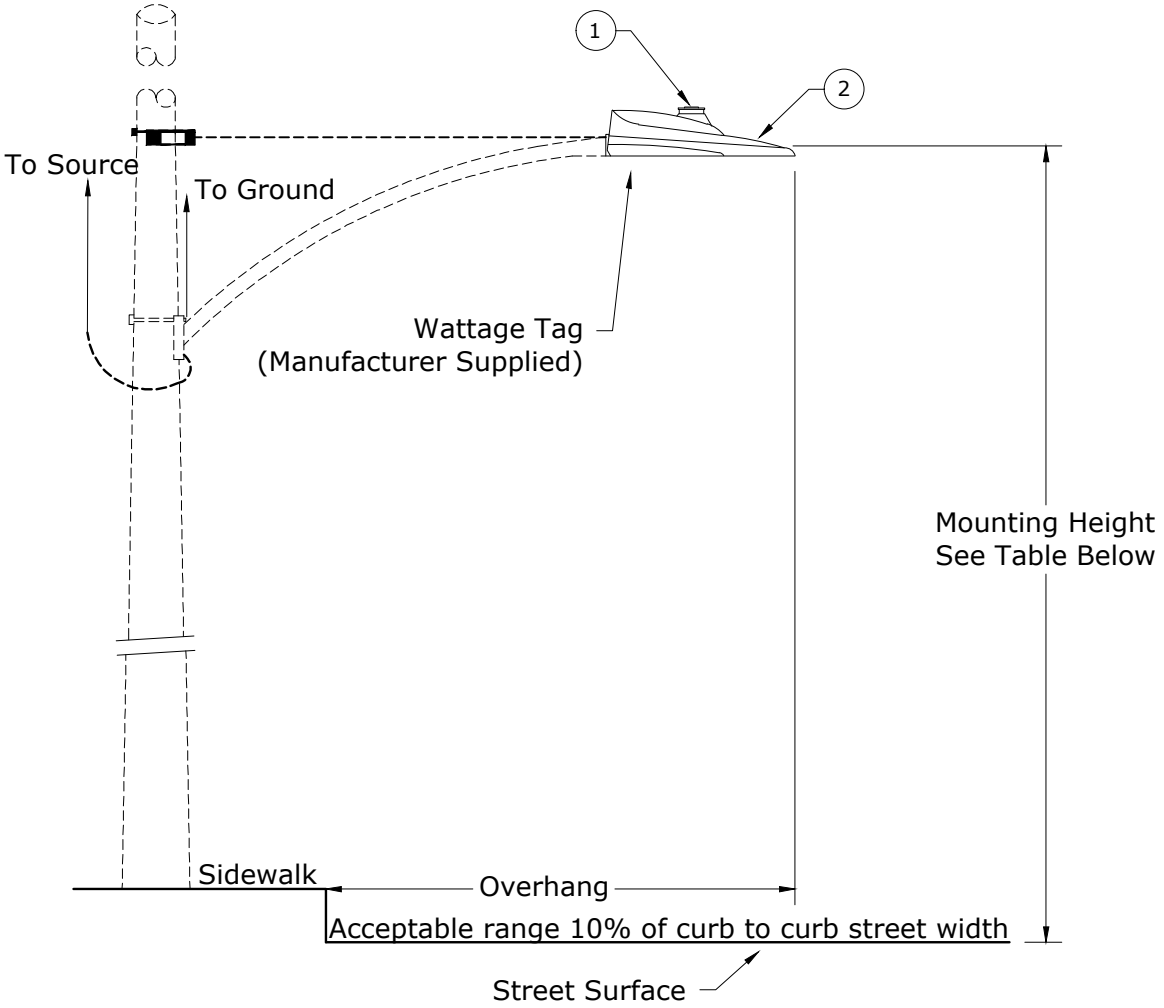

RECOMMENDED MOUNTING HEIGHTS		
TYPE	MINIMUM	MAXIMUM
100W	25 ft	27 ft
200W	30 ft	32 ft

Notes:

1. Installation meets NESC not NEC.
2. Mast arm attachment height varies with type of arm and must be positioned so luminaire is level.

Rev. 1 - Updated to LED and added note #1.

ITEM NO	DESCRIPTION	SL100LED		SL200LED	
		QTY	S/N	QTY	S/N
1	Photoeye, LED and HPS, 120V, 3-Pin	1	2872	1	2872
2	Luminaire, Cobrahead, LED, Type 3, 3000K, HPS Equivalent	1	2889	1	2895

Clark Public Utilities

CONSTRUCTION STANDARDS

STREETLIGHT
100/200W EQUIV. LED COBRAHEAD
WOOD POLE MOUNTED

REVISIONS

R	DATE	ENGR	OPS
1	6/1/22	DRK	

PAGE: 1 of 1

SL100LED,SL200LED

CAD FILE: SL100LED

APP: HWH/GLE
DATE: 1/31/80

SECTION 1000

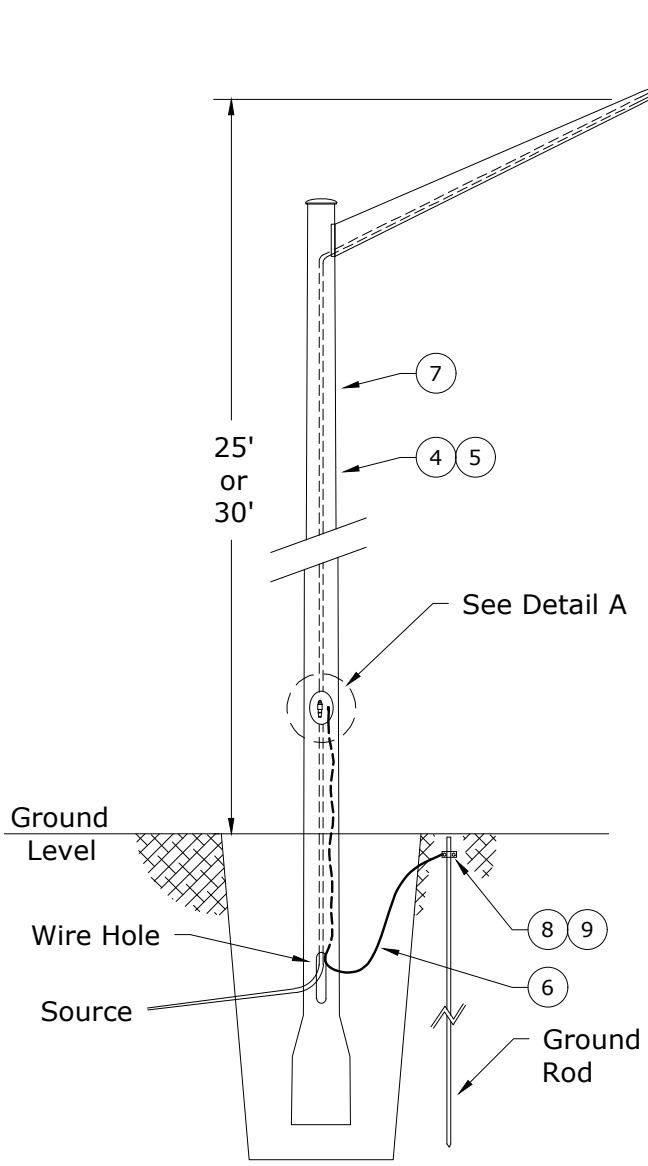

All splices shall be compression
DO NOT USE WIRE NUTS

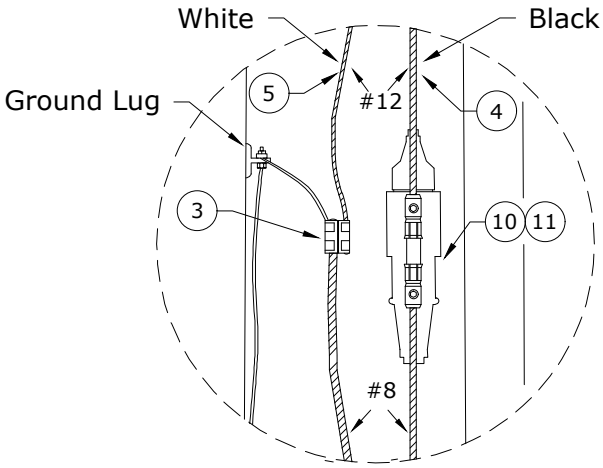

Detail A

Notes: Installation meets NESC not NEC.

ITEM NO	DESCRIPTION	SL100ALED		SL200ALED	
		QTY	S/N	QTY	S/N
1	Photoeye, LED and HPS, 120V, 3-pin	1	2872	1	2872
2	Luminaire, Cobrahead, LED, Type 3, 3000K, HPS Equivalent	1	2889	1	2895
3	Connector, H-Tap, Al/Cu, Run #6-#2 Str, Tap #14-#8 Str	1	416	1	416
4	Cable, 600V, Cu, #12, 19-Str, Black, 1C	42 ft	386	42 ft	386
5	Cable, 600V, Cu, #12, 19-Str, White, 1C	42 ft	387	42 ft	387
6	Conductor, Cu, #6, Solid, Bare, Soft Drawn, 1C	2 ft	374	2 ft	374
7	Pole, Streetlight, Al, Direct Burial, 25' Mounting Height w/ 6' Arm ✲	1	2946	–	N/A
7	Pole, Streetlight, Al, Direct Burial, 30' Mounting Height w/ 6' Arm ✲	–	N/A	1	2945
8	Clamp, Ground Rod, 5/8", Bronze, Small	1	281	1	281
9	Rod, Ground, 5/8" x 8'	1	1124	1	1124
10	Fuse, 10A, 250V, Time Delay, Streetlight	1	2389	1	2389
11	Holder, Fuse, Streetlight	1	2388	1	2388

Clark Public Utilities

CONSTRUCTION STANDARDS

STREETLIGHT, 100/200W EQUIV. LED COBRAHEAD
SINGLE ARM
ALUMINUM POLE, DIRECT BURIAL

REVISIONS			
R	DATE	ENGR	OPS

PAGE:		CAD FILE:	APP: DRK/KJP	SECTION
1 of 1	SL100ALED,SL200ALED	SL100ALED	DATE: 6/1/22	1000

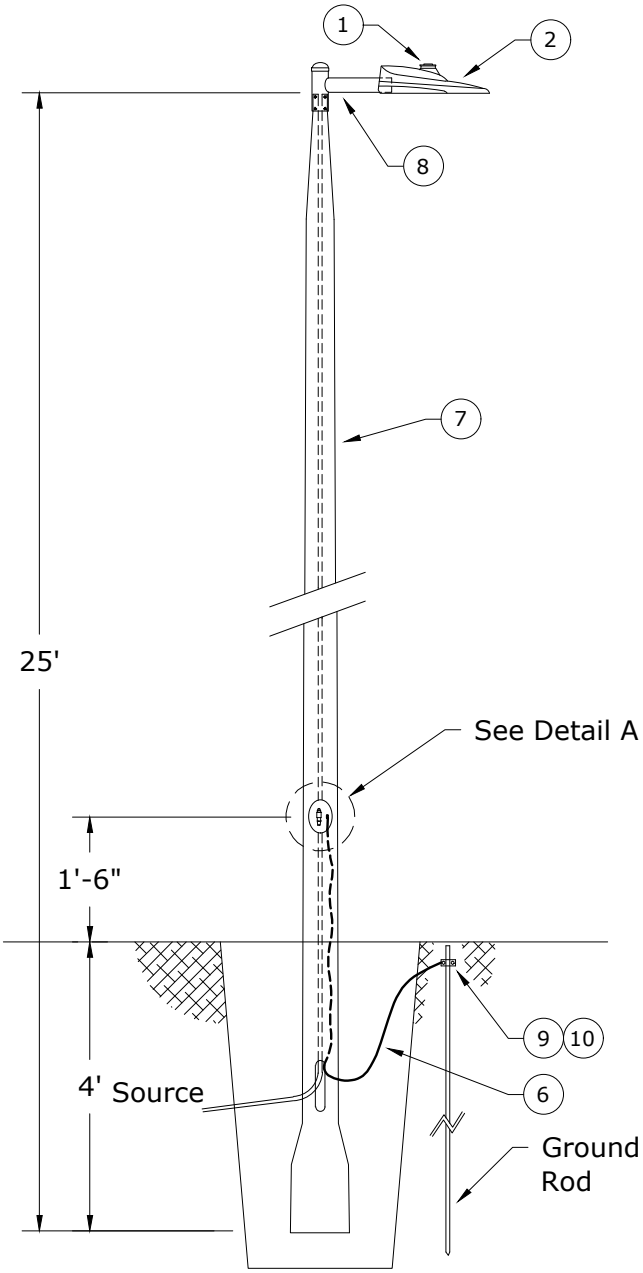

All splices shall be compression
DO NOT USE WIRE NUTS

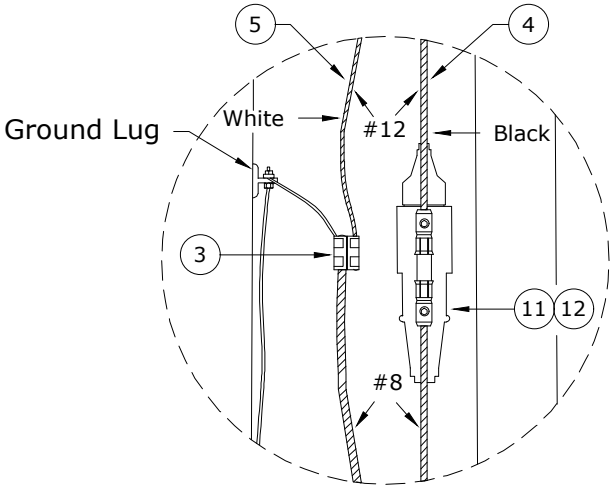

Detail A

Notes: Installation meets NESC not NEC.

ITEM NO	DESCRIPTION	SL100SALED	
		QTY	S/N
1	Photoeye, LED and HPS, 120V, 3-pin	1	2872
2	Luminaire, Cobrahead, LED Type 3, 3000K, HPS Equivalent	1	2889
3	Connector, H-Tap, Al/Cu, Run #6-#2 Str - Tap #14-#8 Str	1	416
4	Cable, 600V, Cu, #12, 19-Str, Black, 1C	20 ft	386
5	Cable, 600V, Cu, #12, 19-Str, White, 1C	20 ft	387
6	Conductor, Cu, #6, Solid, Bare, Soft Drawn, 1C	2 ft	374
7	Pole, Streetlight, Al, Direct Burial, 25' Mounting Height, Post Top ✲	1	2947
8	Arm, Tenon-mount, Streetlight	1	2901
9	Clamp, Ground Rod, 5/8", Bronze, Small	1	281
10	Rod, Ground, 5/8" x 8'	1	1124
11	Fuse, 10A, 250V, Time Delay, Streetlight	1	2389
12	Holder, Fuse, Streetlight	1	2388

Clark Public Utilities

CONSTRUCTION STANDARDS

STREETLIGHT, 100W EQUIV. LED COBRAHEAD
SHORT MAST ARM
ALUMINUM POLE, DIRECT BURIAL

REVISIONS			
R	DATE	ENGR	OPS

PAGE: 1 of 1

SL100SALED

CAD FILE: SL100SALED

APP: DRK/KJP
DATE: 6/1/22

SECTION 2200

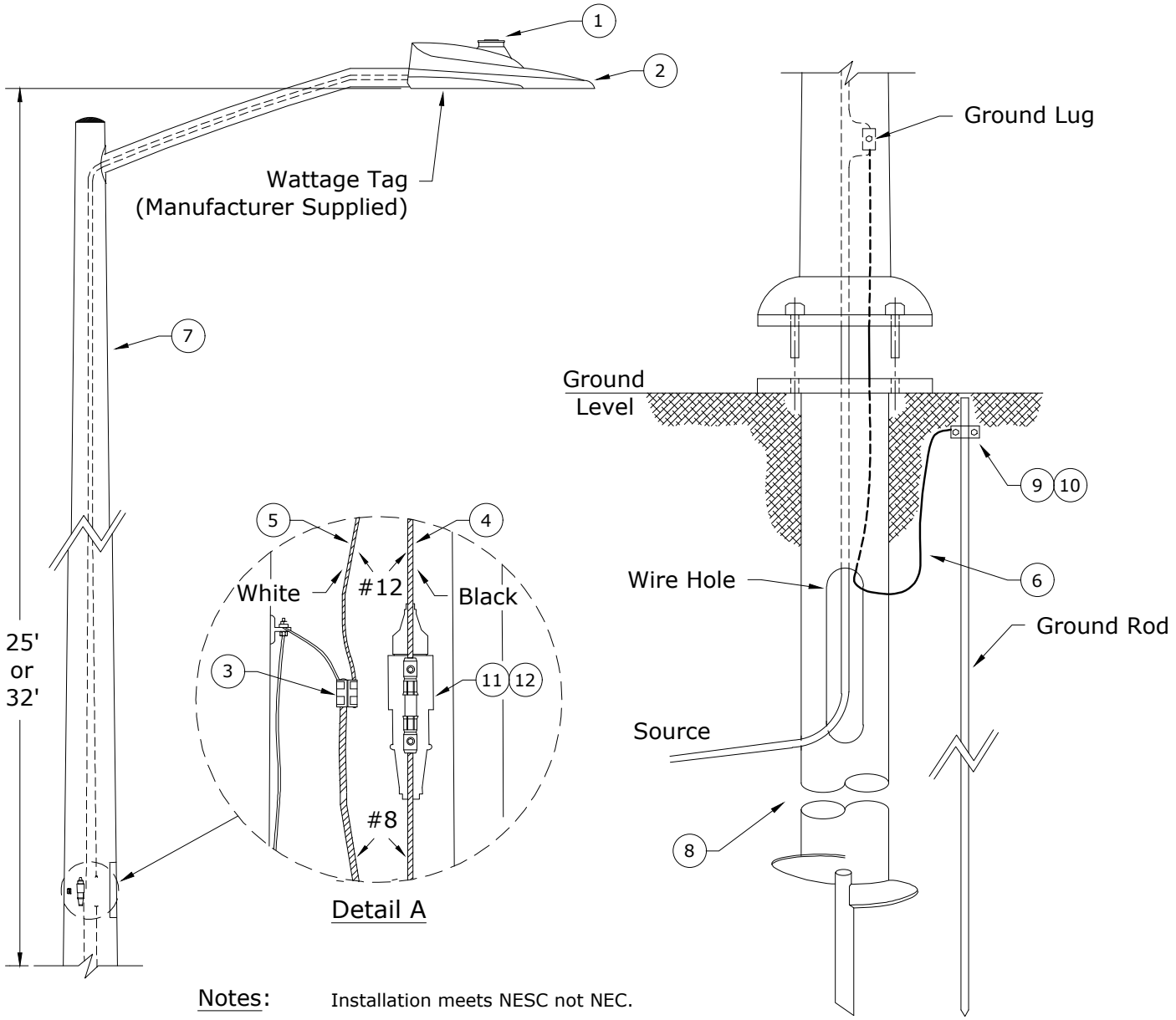

Notes: Installation meets NESC not NEC.

ITEM NO	DESCRIPTION	SL100SFLED		SL200SFLED	
		QTY	S/N	QTY	S/N
1	Photoeye, LED and HPS, 120V, 3-pin	1	2872	1	2872
2	Luminaire, Cobrahead, LED, Type 3, 3000K, HPS Equivalent	1	2889	1	2895
3	Connector, H-Tap, Al/Cu, #6 Solid, Bare, Soft Drawn, 1C	1	416	1	416
4	Cable, 600V, Cu, #12, 19-Str, Black, 1C	42 ft	386	42 ft	386
5	Cable, 600V, Cu, #12, 19-Str, White, 1C	42 ft	387	42 ft	387
6	Conductor, Cu, #6 Solid, Bare, Soft Drawn, 1C	2 ft	374	2 ft	374
7	Pole, Streetlight, Al, Anchor base 11-1/2" bolt circle, 25' mounting height, 6' arm	1	1225	_	N/A
7	Pole, Streetlight, Al, Anchor base 11-1/2" bolt circle, 32' mounting height, 6' arm	_	N/A	1	1226
8	Anchor, Streetlight foundation (rocky soil), 6" Diameter	1	20	1	20
9	Clamp, Ground Rod, 5/8", Bronze, Small	1	281	1	281
10	Rod, Ground 5/8" x 8'	1	1124	1	1124
11	Fuse, 10A, 250V, Time Delay, Streetlight	1	2389	1	2389
12	Holder, Fuse, Streetlight	1	2388	1	2388

Clark Public Utilities

CONSTRUCTION STANDARDS

STREETLIGHT
100/200W EQUIV. LED COBRAHEAD, SINGLE ARM
ALUMINUM POLE, ANCHOR BASE

REVISIONS			
R	DATE	ENGR	OPS

PAGE:		CAD FILE:	APP: DRK/KJP	SECTION
1 of 1	SL100SFLED,SL200SFLED	SL100SFLED	DATE: 6/1/22	1000

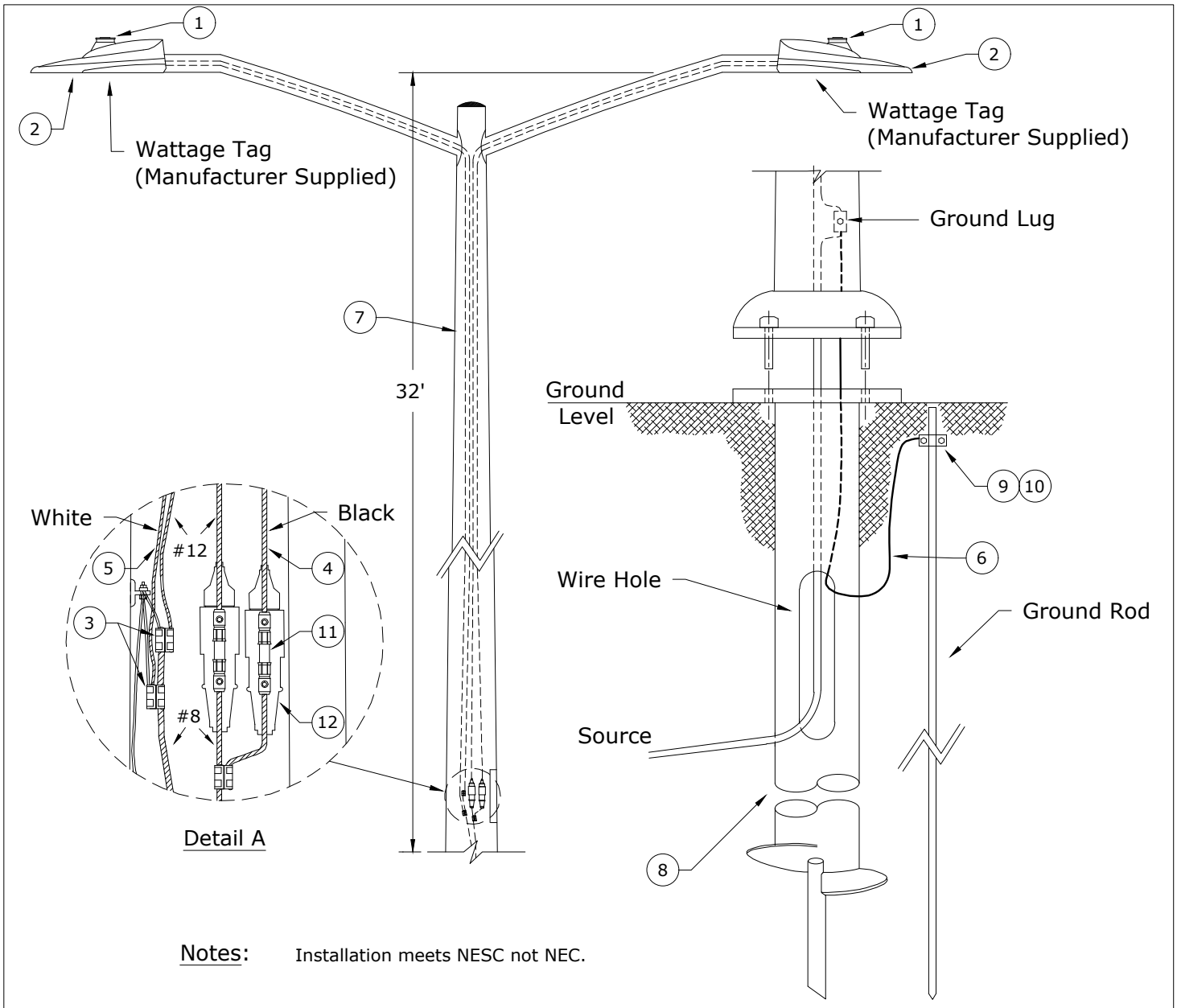

Notes: Installation meets NESC not NEC.

Rev. 2 - Changed to LED lights.

ITEM NO	DESCRIPTION	SL200SFDLED	
		QTY	S/N
1	Photoeye, LED and HPS, 120V, 3-pin	2	2872
2	Luminaire, Cobrahead, LED, Type 3, 3000K, HPS Equivalent	2	2895
3	Connector, H-Tap, Al/Cu, #6 Solid, Bare, Soft Drawn, 1C	2	416
4	Cable, 600V, Cu, #12, 19-Str, Black, 1C	84 ft	386
5	Cable, 600V, Cu, #12, 19-Str, White, 1C	84 ft	387
6	Conductor, Cu, #6 Solid, Bare, Soft Drawn, 1C	3 ft	374
7	Pole, Streetlight, Al, Anchor base 11-1/2" bolt circle, 32' mounting height, Double 6' arm	1	1227✲
8	Anchor, Streetlight foundation (rocky soil), 6" Diameter	1	20 ✲
9	Clamp, Ground Rod, 5/8", Bronze, Small	1	281
10	Rod, Ground 5/8" x 8'	1	1124
11	Fuse, 10A, 250V, Time Delay, Streetlight	2	2389
12	Holder, Fuse, Streetlight	2	2388

Clark Public Utilities

CONSTRUCTION STANDARDS

STREETLIGHT, 200W EQUIV.
LED COBRAHEAD, TWIN ARM
ALUMINUM POLE, ANCHOR BASE

REVISIONS

R	DATE	ENGR	OPS
0	2/23/00	HWH	MA
1		LB	AH
2	6/1/22	DRK	

PAGE: 1 of 1

SL200SFDLED

CAD FILE: SL200SFDLED

APP: JEH

DATE: 2/22/00

SECTION 1000

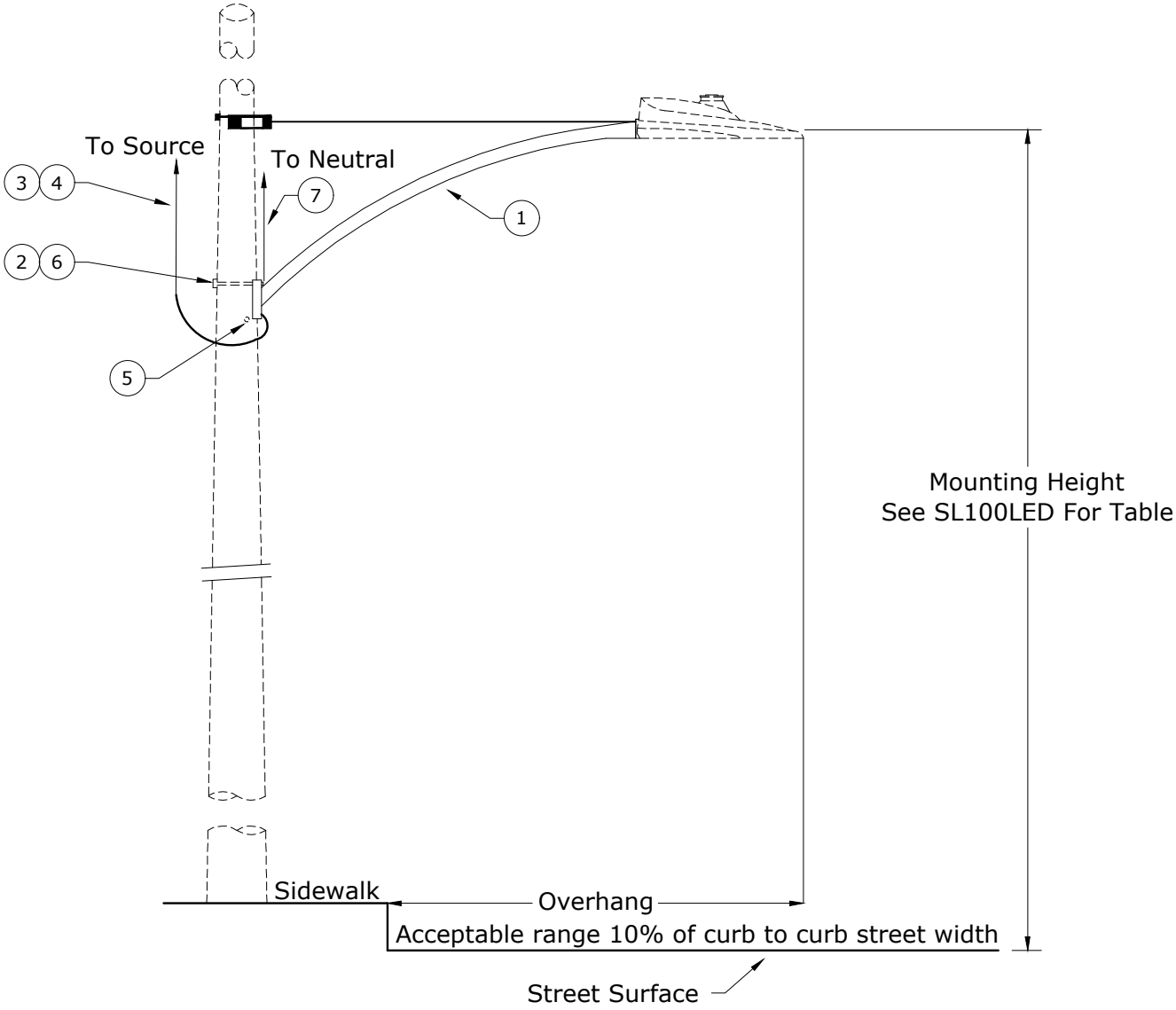

Notes:

1. Installation meets NESC not NEC.
2. Mast of arm attachment height varies with type of arm and must be positioned so luminaire is level. SLARM6, 8, 12, 14, 16, 18, 20 & 22. Ending numbers specify mast arm length. Conductor wire length will be adjusted to match mast arm size.

Rev. 2 - Obsoleted 4' arm.

ITEM NO	DESCRIPTION	SLARM16	
		QTY	S/N
1	Arm, Mast, Steel, 16' Streetlight, Double Guy	1	51
2	Bolt, Machine, 5/8" x 12" Galv, 12,400 lb Ultimate	2	155
3	Cable, 600V, Cu, #12, 19-Str, Black, 1C	19	386
4	Cable, 600V, Cu, #12, 19-Str, White, 1C	19	387
5	Screw, Lag, 1/2" x 3", Fetter Drive, Drive Point	2	1131
6	Washer, Square Flat, 5/8" x 2-1/4" x 2-1/4"	2	1412
7	Conductor, Cu, #6, Solid, Bare, Soft Drawn, 1C	5✲	374

Clark Public Utilities

CONSTRUCTION STANDARDS

STREETLIGHT
MAST ARM INSTALLATION
WOOD POLE MOUNTED

REVISIONS

R	DATE	ENGR	OPS
1	2/23/00	HWH	MA
2	4/20/22	DRK	

PAGE: 1 of 1

SLARM6-SLARM22

CAD FILE: SLARM6

APP:

DATE:

SECTION 1000

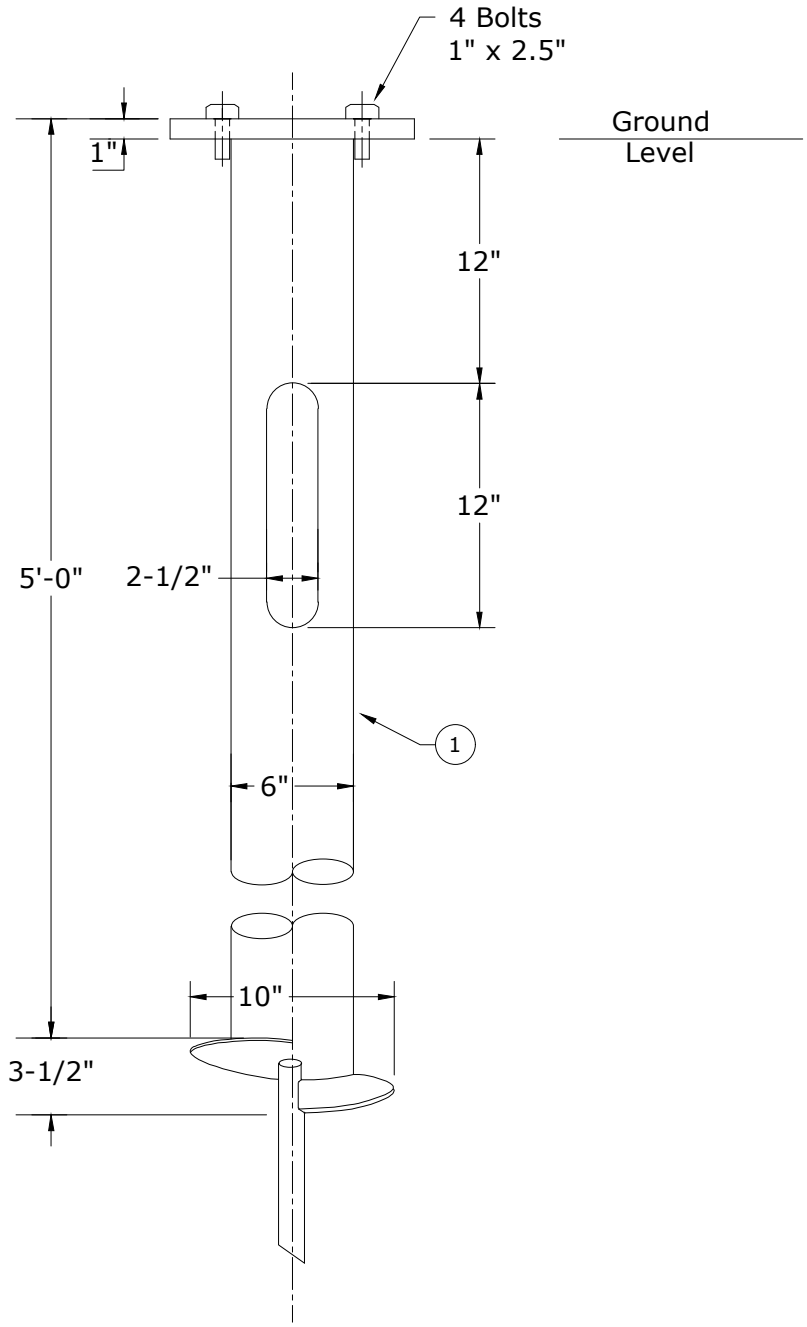

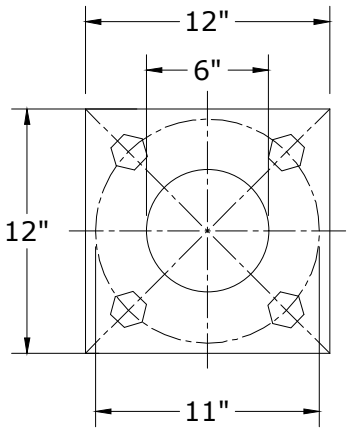

Rev. 2 - Updated dimension formatting.

ITEM NO	DESCRIPTION	SLF QTY	SLF S/N
1	Anchor, Streetlight Foundation (Rocky Soil), 6" Diameter	1	20

Clark Public Utilities

CONSTRUCTION STANDARDS

STREETLIGHT FOUNDATION
STEEL - 6" DIAMETER

REVISIONS

R	DATE	ENGR	OPS
1	2/23/00	HWH	MA
2	4/20/22	DRK	

PAGE: 1 of 1

SLF

CAD FILE: SLF

APP: HWH/GW
DATE: 1/31/80

SECTION 1000

STREETLIGHT POLE TAGGING

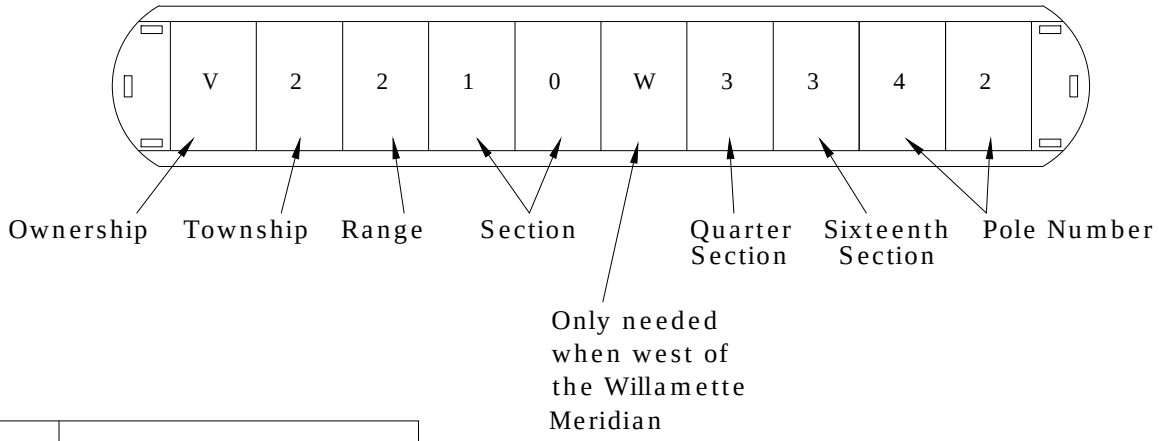

CODE	OWNERSHIP
V	Vancouver
P	Clark Public Utilities
B	Battle Ground
R	Ridgefield
W	Washougal
C	Camas
L	La Center
A	Amboy
Y	Yacolt
U	Unincorporated Clark County
D	WA Dot

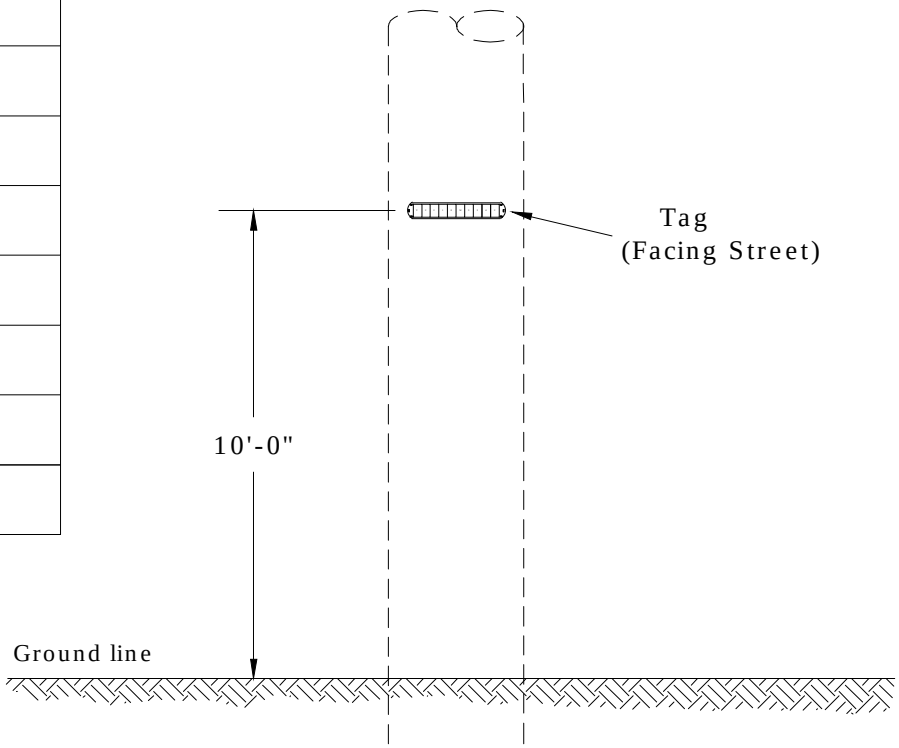

Clark Public Utilities

CONSTRUCTION STANDARDS

STREETLIGHT POLE TAGGING

REVISIONS

R	DATE	ENGR	OPS

PAGE: 1 of 1

SLPT

CAD FILE: SLPT

APP: CM/AH

DATE: 10/17/08

SECTION 1000

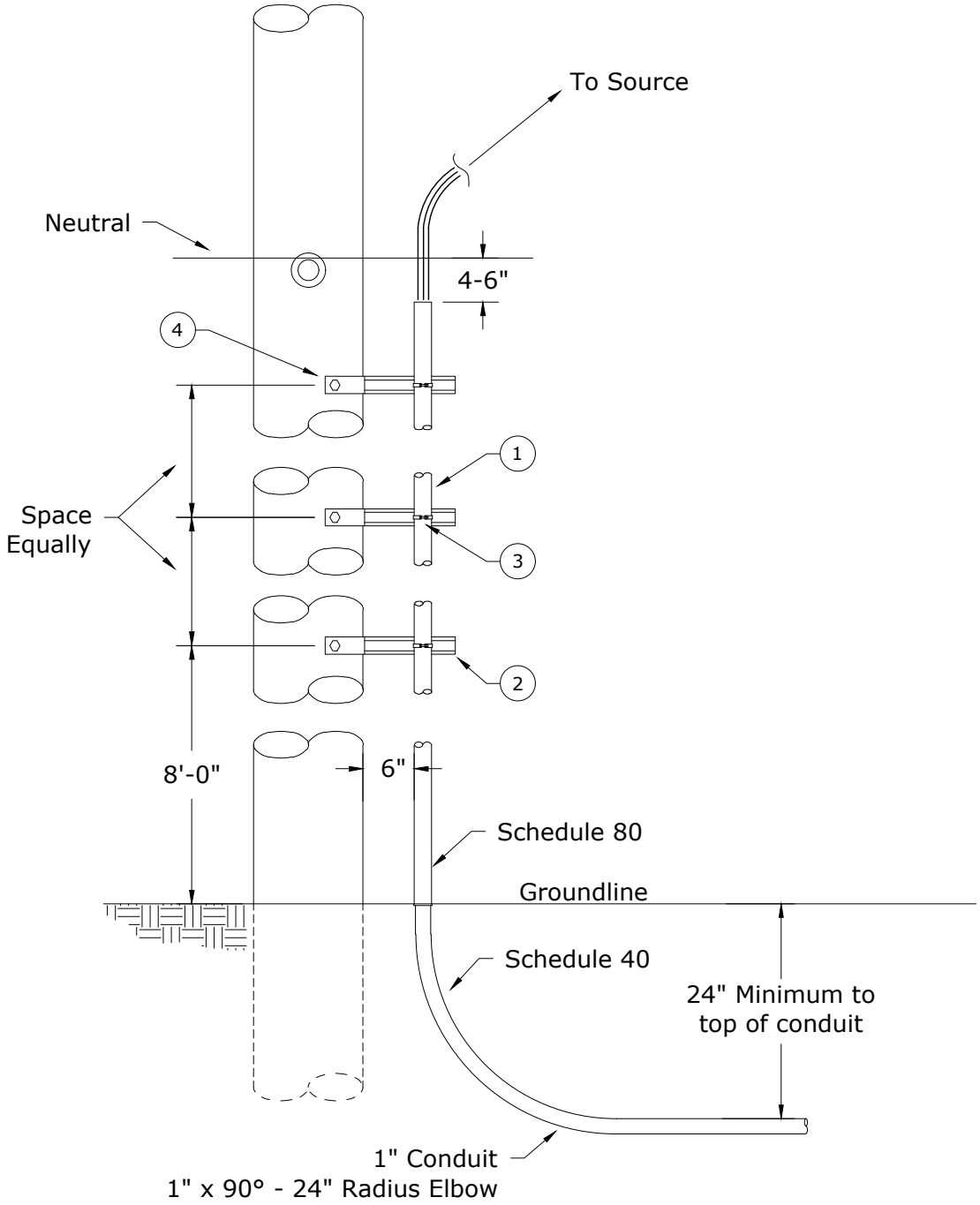

Rev. 3 - Updated to 2017 NESC, added lag screws, corrected material quantity, and reformatted.

ITEM NO	DESCRIPTION	SLR	
		QTY	S/N
1	Conduit, PVC, 1" x 10', Sch 80, (1) Bell End	30☼	2482
2	Bracket, Standoff, 10.5", w/Stop	3 ☼	226
3	Clamp, Standoff Bracket, 1" Conduit	3	292
4	Screw, Lag, 1/2" x 3", Fetter Drive, Drive Point	6	1131

Clark Public Utilities

CONSTRUCTION STANDARDS

SECONDARY OVERHEAD TO
UNDERGROUND RISER ASSEMBLY
FOR STREETLIGHT FEEDER

REVISIONS

R	DATE	ENGR	OPS
1	2/23/00	HWH	MA
2	10/17/08	CM	AH
3	4/20/22	DRK	

PAGE: 1 of 1

SLR

CAD FILE: SLR

APP: HWH/GW

DATE: 1/22/80

SECTION 1000

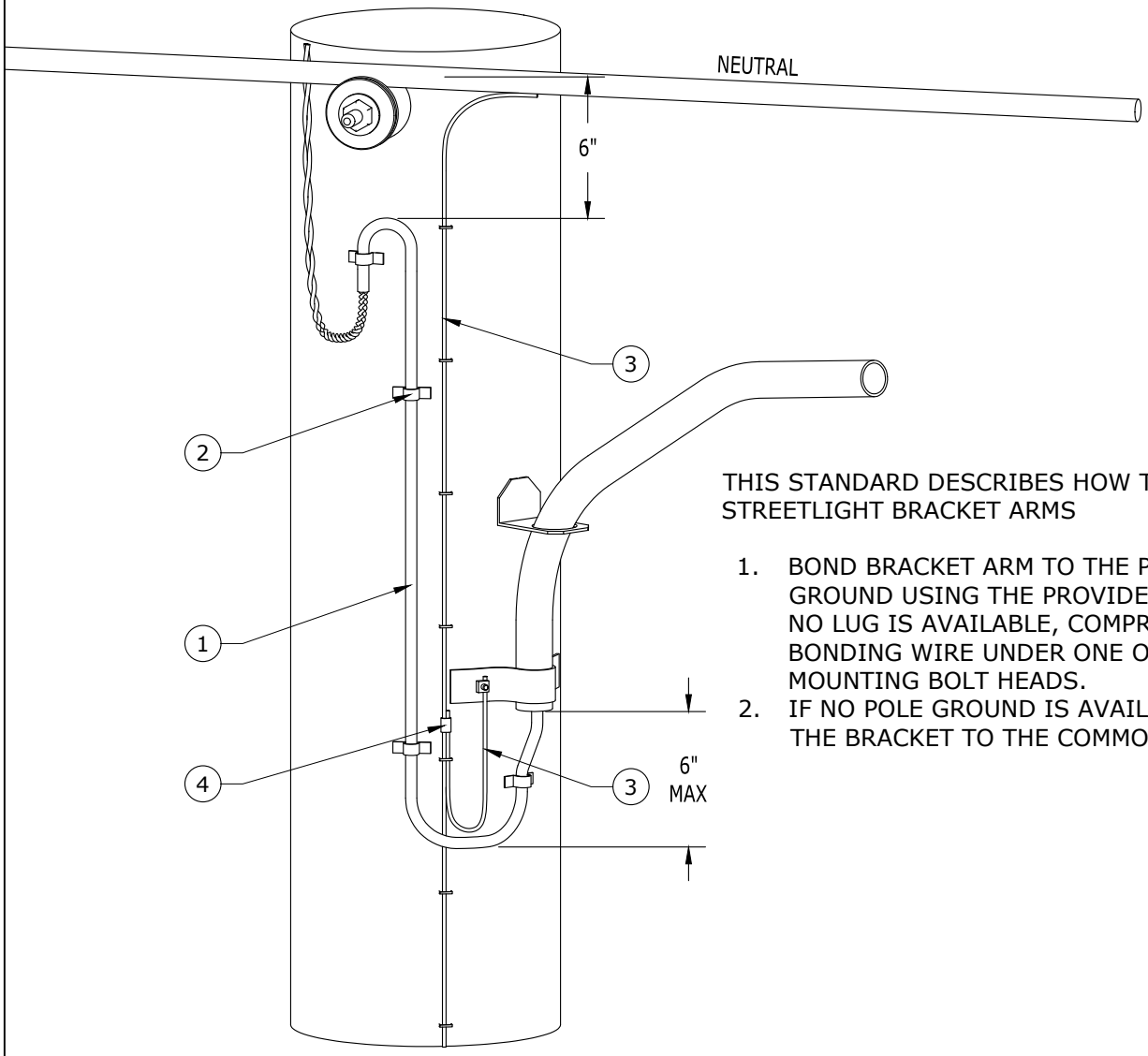

THIS STANDARD DESCRIBES HOW TO GROUND STREETLIGHT BRACKET ARMS

1. BOND BRACKET ARM TO THE POLE GROUND USING THE PROVIDED LUG. IF NO LUG IS AVAILABLE, COMPRESS THE BONDING WIRE UNDER ONE OF THE MOUNTING BOLT HEADS.
2. IF NO POLE GROUND IS AVAILABLE, BOND THE BRACKET TO THE COMMON NEUTRAL.

Rev. 0 - New Standard

ITEM NO	DESCRIPTION	SLJUMOD	
		QTY	S/N
1	Conduit, PVC, Flexible, 1/2", Streetlight For Joint Use Clearance	AS REQ	2965
2	Strap, Pipe 1/2 In Hw	4	1237
3	Conductor, OH, Cu, #6 Solid, Bare, Soft Draw, 1C	AS REQ	374
4	Connector, Crimpet Cu 6/4-4/4 Cu 6/4-4/4	1	450

Clark Public Utilities

CONSTRUCTION STANDARDS

STREETLIGHT
JOINT USE MODIFICATION
FOR NESC CLEARANCE REDUCTION

REVISIONS			
R	DATE	ENGR	OPS
0	2/10/25	CM	GM

PAGE: 1 of 1

SLJUMOD

CAD FILE: SLJUMOD

APP:

DATE: 6/12/24

SECTION 1000

1100
OVERHEAD TRANSFORMERS

3/13/2023

~	F1	Fuse Schedule – Overhead Transformers
~	T1	Transformer Field Stenciling Code
~	T3,T3H	Pole Mounted Transformer and Cutout on Pole
~	T4,T4H	Pole Mounted Transformer and Cutout on Crossarm
~	T5	Overhead Service Installation Guideline
~	T21	Crossarm Construction - Two Transformers - Open Wye Primary
~	T23	Twiggy Construction - Two Transformers - Open Wye Primary
~	T31	Three Transformers - Grounded Y - Grounded Y
~	T32	Three Transformers - Closed Δ - Closed Δ
~	TC2A	1Ø & 3Ø, 2-Winding Boost or Buck Xfmr Bank - Installation & Removal Procedure
~	TC3	3Ø Open Δ for 120/240 3Ø 4-wire, 240 3Ø 3-wire, 480v 3Ø 3-wire
~	TC4	3Ø Open-Y Open-Δ for 120/240 3Ø 4-wire, 240 3Ø 3-wire, 480v 3Ø 3-wire
~	TC5	3Ø Δ-Δ for 120/240 3Ø 4-wire, 240 3Ø 3-wire, 480v 3Ø 3-wire
~	TC5A	3Ø Δ-Δ Closed Banks for 120/240 3Ø 4-wire, 240 3Ø 3-wire, 480v 3Ø 3-wire
~	TC6	3Ø Δ-Y for 120/208 or 277/480v Service
~	TC7	3Ø Y-Y for 120/208 or 277/480v Service
~	TC8	3Ø Y-Δ for 240v 3Ø 3-wire 480v 3Ø 3-wire
~	TC10	3Ø Transformer Connections
~	TC11	3Ø Transformer Connections
C	TL1	Transformer Lead Sizes - Overhead Secondary
~	TL2	Large Transformer Lead Size - Overhead

N New Standard
R Redrawn Standard
C Changed Standard
~ No Change

7.2 kV Wye-Connected Primary Overhead Transformers

kVA	Transformer Stock Numbers			Primary Transformer Fusing *2*6		Minimum Upstream OH Fuse *4*6	
	BM 120/240	BR 240/480	BW 277/480	Size	S/N	Size	S/N
5/10*1	Obsolete			5 A ✲	678	10 A	680
15	1346			5 A	678	10 A	680
25	1347	1356	2041	10 A	680	20 A	682
37.5	1348	1357 (REQ)		15 A	681	25 A	683
50	1349		2236	20 A	682	30 A	684
75	1350		2669	30 A	684	50 A	686
100	1351		2670	40 A	685	65 A	687
167			2671	65 A	687	100 A	689
250 ✲			2053	80 A	688	125 A *5	690

12 kV Delta-Connected Primary Overhead Transformers

kVA	Transformer Stock Numbers			1 or 2Ø Delta Primary				3Ø Delta Primary *3			
				Primary Transformer Fusing *6		Minimum Upstream OH Fuse Size *4*6		Primary Transformer Fusing *6		Minimum Upstream OH Fuse Size *4*6	
	CM 120/240	CR 240/480	CW 277/480	Size	S/N	Size	S/N	Size	S/N	Size	S/N
5/10*1	Obsolete	Obsolete	Obsolete	5 A	678	10 A	680	5 A	678	10 A	680
15	1358	1365		5 A	678	10 A	680	5 A	678	10 A	680
25	1359	1366	2234	7 A	679	15 A	681	10 A	680	20 A	682
37.5	1360	1367		10 A	680	20 A	682	15 A	681	25 A	683
50	1361	1934		15 A	681	25 A	683	20 A	682	30 A	684
75	1362			20 A	682	30 A	684	30 A	684	50 A	686
100	1363	1370	1979	25 A	683	40 A	685	40 A	685	65 A	687
167	1364	1371	1376	40 A	685	65 A	687	65 A	687	100 A	689
250	1978	1832		65 A	687	100 A	689	80 A	688	125 A *5	690
333 ✲		1372		See Systems Engineering							
500 ✲		1373 (REQ)	2055 (OBS)								

*1 5 and 10kVA are not stocked. Cannot be used for new services.
*2 For Y-banked transformers fuse each phase by its 1Ø rating.
*3 For 3Ø delta banks use two fuses of the same size for lighter and one fuse for the two power transformers.
*4 Upstream fuses should use the same fuse rating for all phases. Use largest fuse size for application while considering up/downstream fuses, conductor, and loading. Check with Systems Engineering as needed.
*5 125 A fuse must be approved by Systems Engineering.
*6 Overhead fuses used in cutout gates are Kearney Type 200 (N).

Rev. 2 - Added stock numbers, upstream fuses, and notes.

Clark Public Utilities

CONSTRUCTION STANDARDS

FUSE SCHEDULE
OVERHEAD TRANSFORMERS

REVISIONS

R	DATE	ENGR	OPS
1	3/02	Redrawn	in CAD
2	7/10/20	KJP	

PAGE: 1 of 1 | F1 | CAD FILE: F1 | APP: ELM | DATE: 1/31/80 | SECTION 1100

Transformer Stenciling Codes

PRIMARY	
CODE	VOLTAGE
A	2,400(Obsolete)
B	7,200
C	12,000

SECONDARY	
CODE	VOLTAGE
A	2,400(Obsolete)
L	120/208
M	120/240
R	240/480
W	277/480

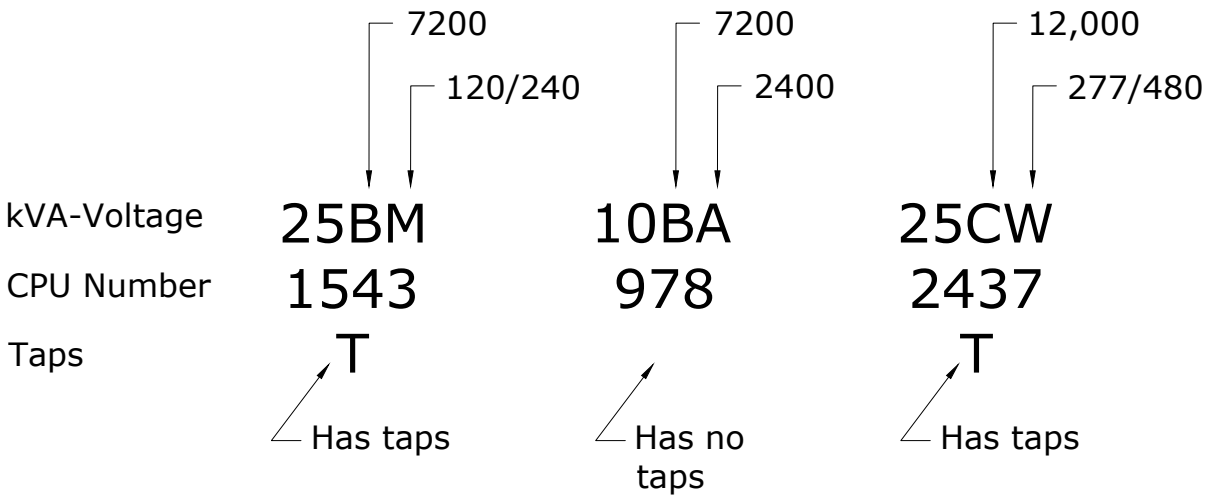

Tap Settings

The transformer specifications call for taps on all transformers. Each tap changes the voltage 2 $\frac{1}{2}$%. Assuming that 100% is 120v, each tap will change secondary voltage by 3 volts.

Some single-bushing overhead transformers with "B" primary voltage rating have four taps below 100% (97 $\frac{1}{2}$%, 95%, 92 $\frac{1}{2}$% and 90%). The rest have two taps above (102 $\frac{1}{2}$% and 105%) and two taps below (97 $\frac{1}{2}$% and 95%). There are some two-bushing "B" voltage rating transformers. They may have 4 taps below or 2 above/2 below.

Two-bushing overhead transformers with "C" primary voltage rating and all padmount transformers have four taps below 100% (97 $\frac{1}{2}$%, 95%, 92 $\frac{1}{2}$%, and 90%).

The taps are not load-tap changing so the transformer must be de-energized to change the tap. The taps actually change the windings ratio (N_P/N_S). At 100% for 12470GrdY/7200, N_P/N_S=7200/120=60. At 95%, N_P/N_S=7200/123=58.5. At 105%, N_P/N_S=7200/114= 63.2.

Rev 2: Updated voltage codes, combined with Std T1A, and added additional transformer information.

Clark Public Utilities

CONSTRUCTION STANDARDS

GENERAL TRANSFORMER INFORMATION

REVISIONS			
R	DATE	ENGR	OPS
1	3/02	Redrawn	in CAD
2	12/9/22	CRM	GM

PAGE:		CAD FILE:	APP: ELM	SECTION
1 of 4	T1	T1	DATE: 1/31/80	1100

Taps are lowered to raise the voltage and raised to lower the voltage. For example, going from 100% to 97 $\frac{1}{2}$% tap position will raise the secondary voltage. Going from 100% to 102 $\frac{1}{2}$% tap position will lower the secondary voltage.

Tapped Areas

CPU has tapped areas from 92 $\frac{1}{2}$% to 100%. The tapped areas are indicated on the feeder maps. The tap used will depend on the voltage rating of the transformer.

Any transformer with a "B" voltage rating is rated 12470GrdY/7200v. These are single-bushing overhead transformers and all padmount transformers. There are some two-bushing overhead transformers on the system that also have this rating. The winding ratio for transformers at this voltage rating is 60 at 100%.

Transformers with a "C" voltage rating are rated 12,000v. These are most of the two-bushing overhead transformers. The 3Ø rating for these transformers is 12,000v and the 1Ø rating is 6928v. The winding ratio for transformers in this group is 57.7 at 100%. Since these transformers have a lower voltage rating than the system voltage of 12470/7200v, their tap setting will be two taps above the "B" tap setting.

For example, in the 100% tap areas, "B" transformers will be set at the 100% tap rating to get 120v at the secondary. For "C" transformers, the winding ratios are different. At 100%, N_P/N_S=6928/120=57.7. At 105%, N_P/N_S=6928/114=60.8. Installing a "C" transformer in the 100% tap area at the 100% tap would result in 7200v/57.7=124.8v at the secondary. This would be on the high-side of allowable voltage limits. Putting the "C" transformer on the 105% tap would change the ratio to 7200v/60.8 and the secondary voltage would be 118.5v.

Tap Markings

Each manufacturer has a different way of marking the tap positions and there is no consistency. Some use letters, some uses Arabic numbers, some use Roman numerals, some use voltage levels and some just state the tap percentage. It is important to look at the nameplate of each transformer to determine the correct tap setting. Even among the manufacturers that use letters for the steps, some use A=100% and some use A=105%. The transformer nameplate will be the only way to ensure that the proper tap setting is used.

Overhead Bank Impedances

When matching impedances for overhead transformers that will be connected in a bank, or replacing a burnt out transformer within a bank, make sure that the impedances are within ±25% of each other. For example, if the impedances on a bank of transformers is 3.25% and one needs to be replaced, the replacement should have an impedance between 2.44% and 4.06%.

When paralleling two 1Ø transformers or two 3Ø banks, the impedances between the 1Ø transformers or the two banks should be within ±7.5% of each other.

Rev 2: Updated voltage codes, combined with Std T1A, and added additional transformer information.

Transformer Polarity

By industry standards, all 1Ø distribution transformers 200kVA and smaller, having primary voltages 8660 volts and below (winding voltage) have additive polarity. All other 1Ø transformers have a subtractive polarity. Polarity only applies to 1Ø distribution transformers so 3Ø padmount transformers do not have polarity.

By the standard above, all "B" voltage transformers (12470 GrdY/7200) below 200kVA would be additive polarity. All "C" voltage transformers (12,000v) regardless of size are subtractive because their winding voltage is above 8660 volts.

Polarity does not apply to 3Ø transformers.

Terminal Markings

By industry standards for 1Ø overhead transformers, the high-voltage terminal marked H_1 is brought out on the left-hand terminal of the high-voltage group as seen when facing the highest voltage side of the case from the secondary bushing side, and other "H" terminals are brought out in numerical order from left to right.

For 1Ø overhead transformers, the low-voltage x_1 bushing is on the right when facing the low-side of the transformer for additive polarity (H_1 is diagonally located across from x_1). The x_1 bushing is on the left when facing the low-side of the transformer for subtractive polarity (H_1 is located directly across from x_1). See Figure 1 and Figure 2.

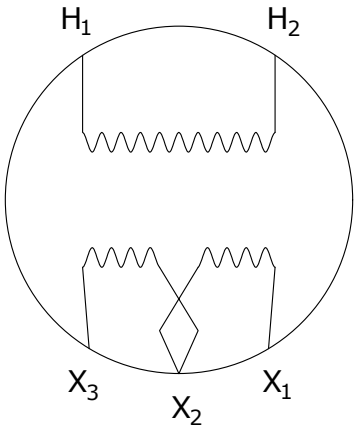

Figure 1: Additive Polarity

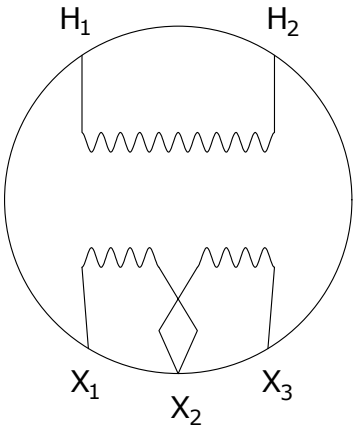

Figure 2: Subtractive Polarity

Rev 2: Updated voltage codes, combined with Std T1A, and added additional transformer information.

Clark Public Utilities

CONSTRUCTION STANDARDS

GENERAL TRANSFORMER INFORMATION

REVISIONS			
R	DATE	ENGR	OPS
1	3/02	Redrawn	in CAD
2	12/9/22	CRM	GM

PAGE:		CAD FILE:	APP: ELM	SECTION
3 of 4	T1	T1	DATE: 1/31/80	1100

Available Transformers for New Services

Primary Voltage	Secondary Voltage	Type	Ø's	Taps	Size (S/N)
Padmount					
12470GrdY/7200	240/120	Pad	1	4 Below	**25**(1317), **50**(1318), **75**(1320), **100**(1322)
12470GrdY/7200	208/120	Pad	3	4 Below	**75**(1328), **150**(1329), **300**(1331), **500**(1332), **750**(1333), **1000**(1334)
12470GrdY/7200	480/277	Pad	3	4 Below	**75**(1337), **150**(1338), **300**(1340), **500**(1341), **750**(1342), **1000**(1343), **1500**(1344)
12470GrdY/7200	480/240	Pad	1	4 Below	**50**(2016)
Overhead					
12470GrdY/7200	120/240	Pole	1	4 Below	**15**(1346), **25**(1347), **37.5**(1348), **50**(1349), **75**(1350), **100**(1351)
12470GrdY/7200	240/480	Pole	1	4 Below	**25**(1356), **37.5**(1357), **50**(1934)
12470GrdY/7200	277	Pole	1	2 Above 2 Below	**25**(2041), **50**(2236), **75**(2669), **100**(2670), **167**(2671), **250**(2053)
12000	120/240	Pole	1	2 Above 2 Below	**15**(1358), **25**(1359), **37.5**(1360), **50**(1361), **75**(1362), **100**(1363), **167**(1364), **250**(1978)
12000	240/480	Pole	1	2 Above 2 Below	**15**(1365), **25**(1366), **37.5**(1367), **100**(1370), **333**(1372)
12000	277	Pole	1	2 Above 2 Below	**25**(2234), **100**(1979), **167**(1376)

Rev 2: Updated voltage codes, combined with Std T1A, and added additional transformer information.

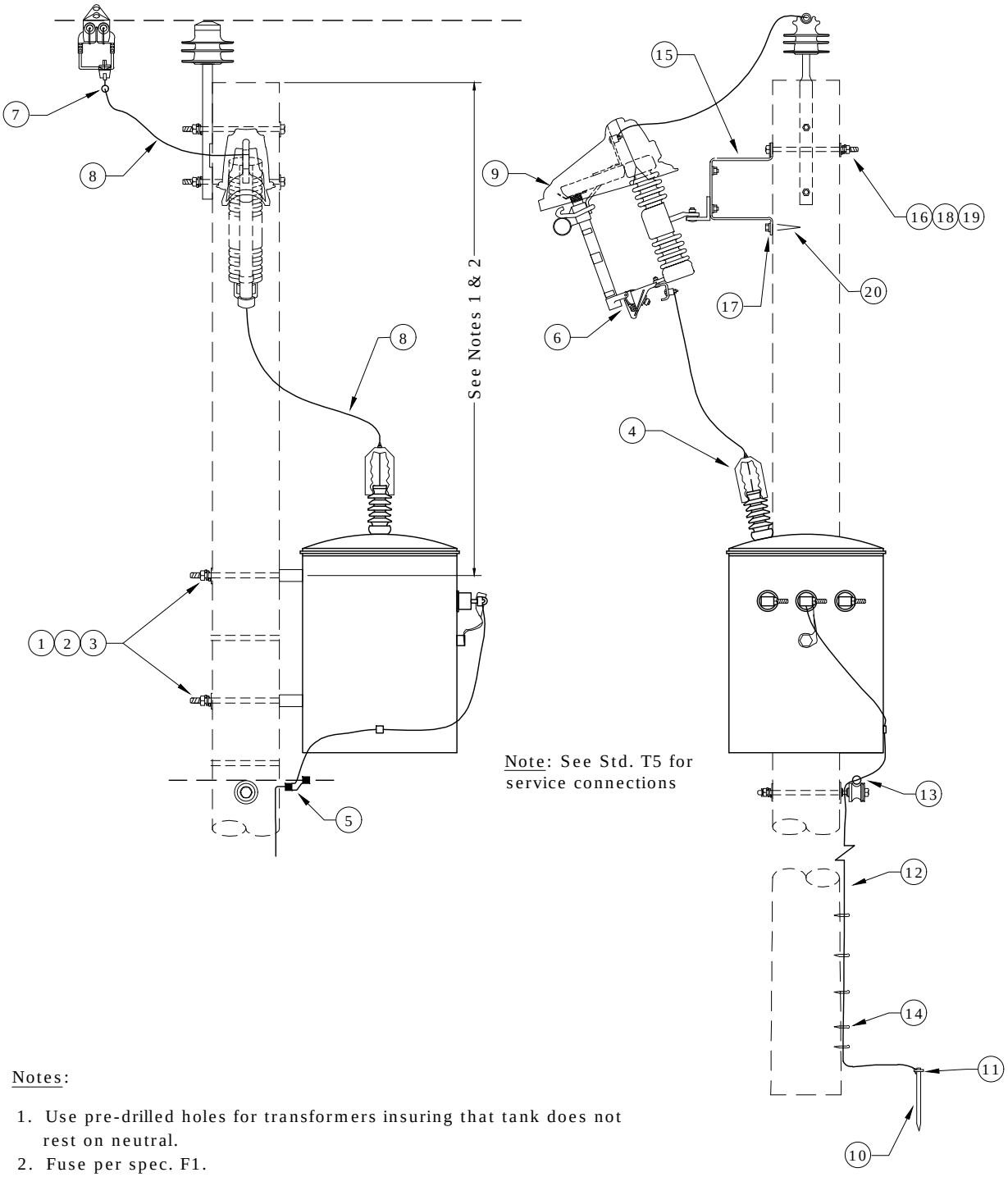

Note: See Std. T5 for service connections

Notes:

1. Use pre-drilled holes for transformers insuring that tank does not rest on neutral.
2. Fuse per spec. F1.
3. Call for hot line stirrup separately:
4. 75KVA and larger use T3H.

WIRE SIZE	S/N
#6 SLD-#6 STR Cu	2338
#4-2/0 Al/Cu	2339
397 MCM Al/Cu	2340
795 MCM Al/Cu	2341

Rev 3: Changed to copperweld ground and corrections.

Clark Public Utilities

CONSTRUCTION STANDARDS

POLE MOUNTED TRANSFORMER
AND CUTOUT ON POLE

REVISIONS

R	DATE	ENGR	OPS
1	3/02	REDRAWN	IN CAD
2	1/13/10	CM	AH
3	5/31/12	KJP	

PAGE: 1 of 2

T3,T3H

CAD FILE: T3

APP: ELM

DATE: 1/31/80

SECTION 1100

Rev 3: Changed to copperweld ground and corrections.

ITEM NO.	DESCRIPTION	T3 ADDITIONAL MATERIAL QTY.	T3 ADDITIONAL MATERIAL S/N	T3H ADDITIONAL MATERIAL QTY.	T3H ADDITIONAL MATERIAL S/N
1	Washer, Sq. Flat 5/8" x 2 1/4" x 2 1/4" (3/4" For T3H)	2	1412	2	1413
2	Bolt, Machine 5/8" x 14" Galv. (3/4" For T3H)	2	156	2	174
3	Washer, Lock, Spring, Double Coil 5/8" (3/4" For T3H)	2	2217✲	2	2218
4	Wildlife Guard, Transformer Bushing	1	721	1	721
5	Connector, Crimpet, Cu 6/4-4/4 (4C4)	1	450	1	450
ITEM NO.	DESCRIPTION	CO100 QTY.	CO100 S/N	CO100 QTY.	CO100 S/N
6	Cutout 100 Amp.	1	2532	1	2532
7	Clamp Hot Line, GP1530	1	284	1	284
8	Conductor, Wire Cu 1/C #4 7STR, Insulated, Red	15	2512	15	2512
9	Wildlife Guard, Cutout (Non-loadbreak), Gray	1	2547	1	2547
ITEM NO.	DESCRIPTION	N1 QTY.	N1 S/N	N1 QTY.	N1 S/N
10	Ground Rod 5/8" x 8'	1	1124	1	1124
11	Ground Rod Clamp, 5/8", Bronze, Small	1	281	1	281
12	Conductor, Copperweld #4	36	1512✲	36	1512✲
13	Connector, Cabelock YP26 AU 2 Al/Cu 2/0 - #2 STR	1	413	1	413
14	Staple, Ground Wire, Barbed, Galv., 1 1/2"	10	2707✲	10	2707✲
ITEM NO.	DESCRIPTION	CO1 QTY.	CO1 S/N	CO1 QTY.	CO1 S/N
15	Cutout Pole-mount Bracket	1	219	1	219
16	Machine Bolt 5/8" x 10" Galv.	1	154	1	154
17	Washer, Flat Round Galv. 1/2"	1	1394	1	1394
18	Washer, Square Flat 5/8" x 2 1/4" x 2 1/4"	1	1412	1	1412
19	Washer, Spring 5/8"	1	2217	1	2217
20	Screw, Lag 1/2" x 3" Drive Point	1	1131	1	1131

Clark Public Utilities

CONSTRUCTION STANDARDS

POLE MOUNTED TRANSFORMER
AND CUTOUT ON POLE

REVISIONS

R	DATE	ENGR	OPS
1	3/02	REDRAWN	IN CAD
2	1/13/10	CM	AH
3	5/31/12	KJP	

PAGE: 2 of 2

T3,T3H

CAD FILE: T3

APP: ELM

DATE: 1/31/80

SECTION 1100

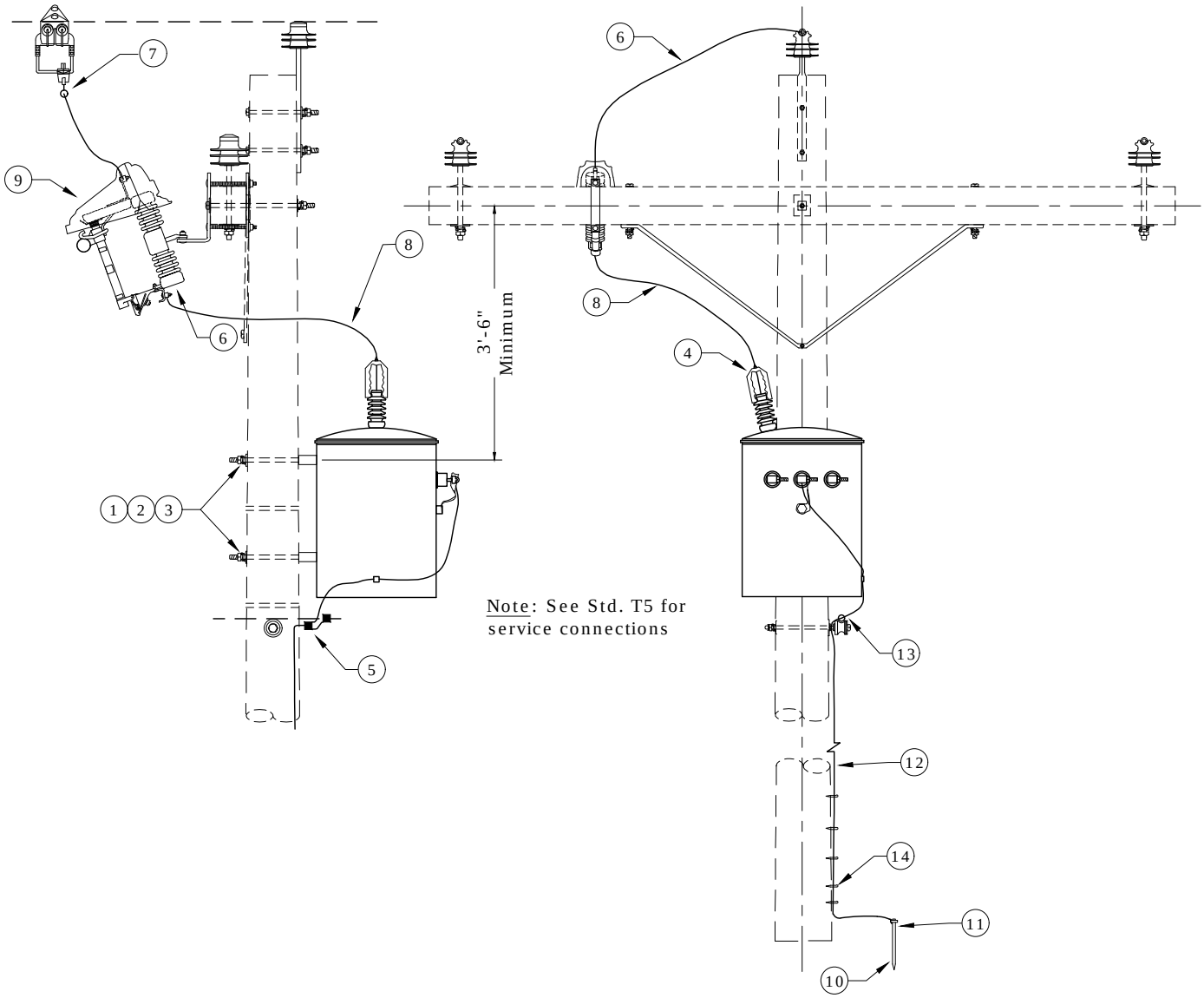

Note: See Std. T5 for service connections

Notes:

1. Use pre-drilled holes for transformers insuring that tank does not rest on neutral.
2. Fuse per Std. F1.
3. Call for hot line stirrup separately:
4. 75KVA and larger use T4H.

WIRE SIZE	S/N
#6 SLD-#6 STR Cu	2338
#4-2/0 Al/Cu	2339
397 MCM Al/Cu	2340
795 MCM Al/Cu	2341

Rev 2: Changed to copperweld ground and corrections.

Clark Public Utilities

CONSTRUCTION STANDARDS

POLE MOUNTED TRANSFORMER
AND CUTOUT ON CROSSARM

REVISIONS

R	DATE	ENGR	OPS
0	3/02	REDRAWN	IN CAD
1	1/13/10	CM	AH
2	5/31/12	KJP	

PAGE: 1 of 2

T4,T4H

CAD FILE: T4

APP: ELM

DATE: 1/31/80

SECTION 1100

Rev 2: Changed to copperweld ground and corrections.

ITEM NO.	DESCRIPTION	T4 ADDITIONAL MATERIAL QTY.	T4 ADDITIONAL MATERIAL S/N	T4H ADDITIONAL MATERIAL QTY.	T4H ADDITIONAL MATERIAL S/N
1	Bolt, Machine 5/8" x 14" Galv. (3/4" For T4H)	2	156	2	174
2	Washer, Lock, Spring, Double Coil 5/8" (3/4" For T4H)	2	2217✲	2	2218
3	Washer, Sq. Flat 5/8" x 2 1/4" x 2 1/4" (3/4" For T4H)	2	1412	2	1413
4	Wildlife Guard, Transformer Bushing	1	721	1	721
5	Connector, Crimpet, Cu 6/4-4/4 (4C4)	1	450	1	450

ITEM NO.	DESCRIPTION	CO100 QTY.	CO100 S/N	CO100 QTY.	CO100 S/N
6	Cutout 100 Amp.	1	2532	1	2532
7	Clamp Hot Line, GP1530	1	284	1	284
8	Conductor, Wire Cu 1/C #4 7STR, Insulated, Red	15	2512	15	2512
9	Wildlife Guard, Cutout (Non-loadbreak, Gray)	1	2547	1	2547

ITEM NO.	DESCRIPTION	N1 QTY.	N1 S/N	N1 QTY.	N1 S/N
10	Ground Rod 5/8" x 8'	1	1124	1	1124
11	Ground Rod Clamp, 5/8", Bronze, Small	1	281	1	281
12	Conductor, Copperweld #4	36	1512✲	36	1512✲
13	Connector, Cabelock YP26 AU 2 Al/Cu 2/0 - #2 STR	1	413	1	413
14	Staple, Ground Wire, Barbed, Galv., 1 1/2"	10	2707✲	10	2707✲

Clark Public Utilities

CONSTRUCTION STANDARDS

POLE MOUNTED TRANSFORMER
AND CUTOUT ON CROSSARM

REVISIONS

R	DATE	ENGR	OPS
0	3/02	REDRAWN	IN CAD
1	1/13/10	CM	AH
2	5/31/12	KJP	

PAGE: 2 of 2

T4,T4H

CAD FILE: T4

APP: ELM

DATE: 1/31/80

SECTION 1100

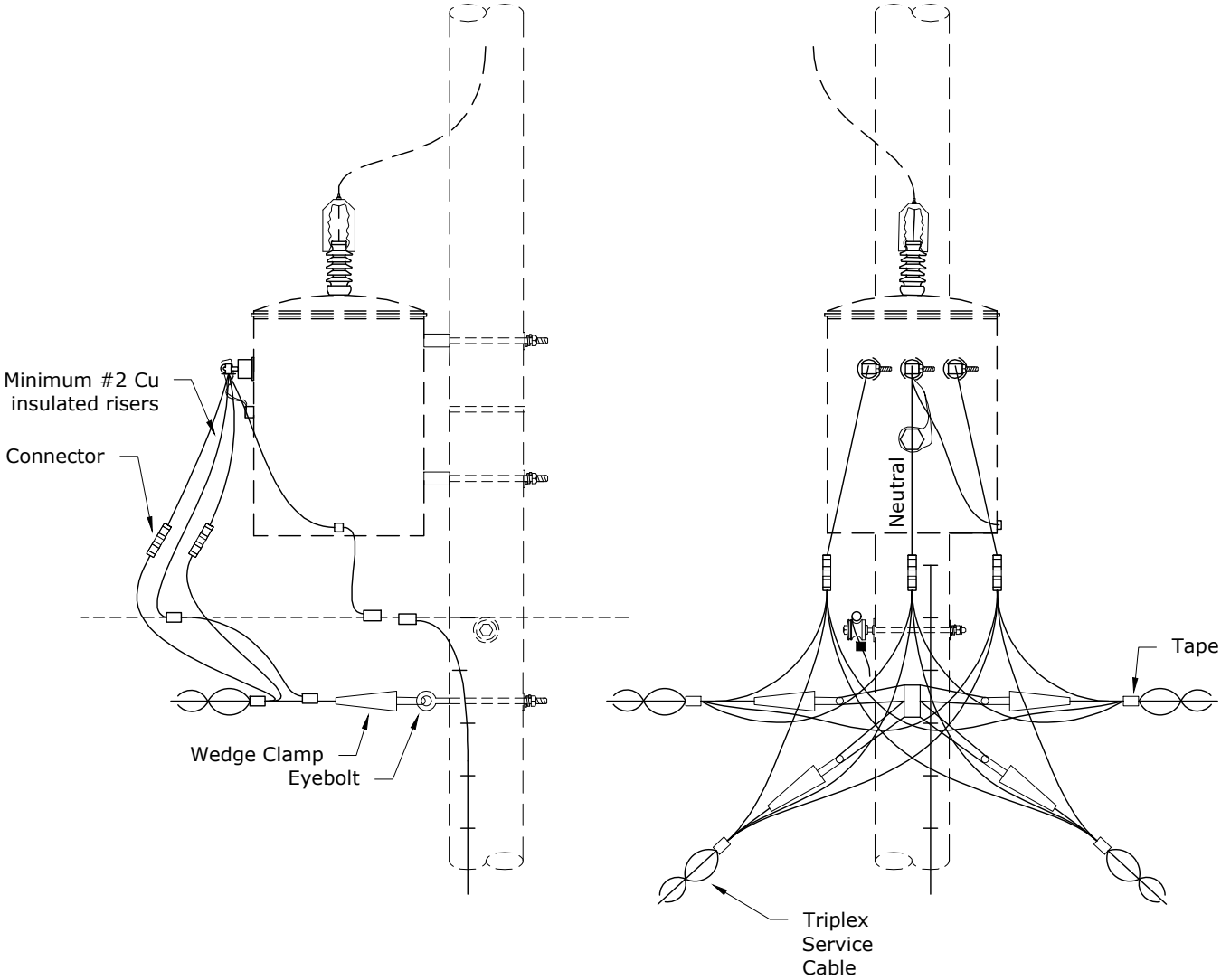

Note: See Stds T3 and T4 in Section 1100 for primary material. See Stds SE1, SE1A, and SE3 in Section 410 for secondary material.

Clark Public Utilities

CONSTRUCTION STANDARDS

OVERHEAD SERVICE
INSTALLATION GUIDELINE

REVISIONS			
R	DATE	ENGR	OPS

PAGE:		CAD FILE:	APP: CRM/GM	SECTION
1 of 1	T5	T5	DATE: 10/6/22	1100

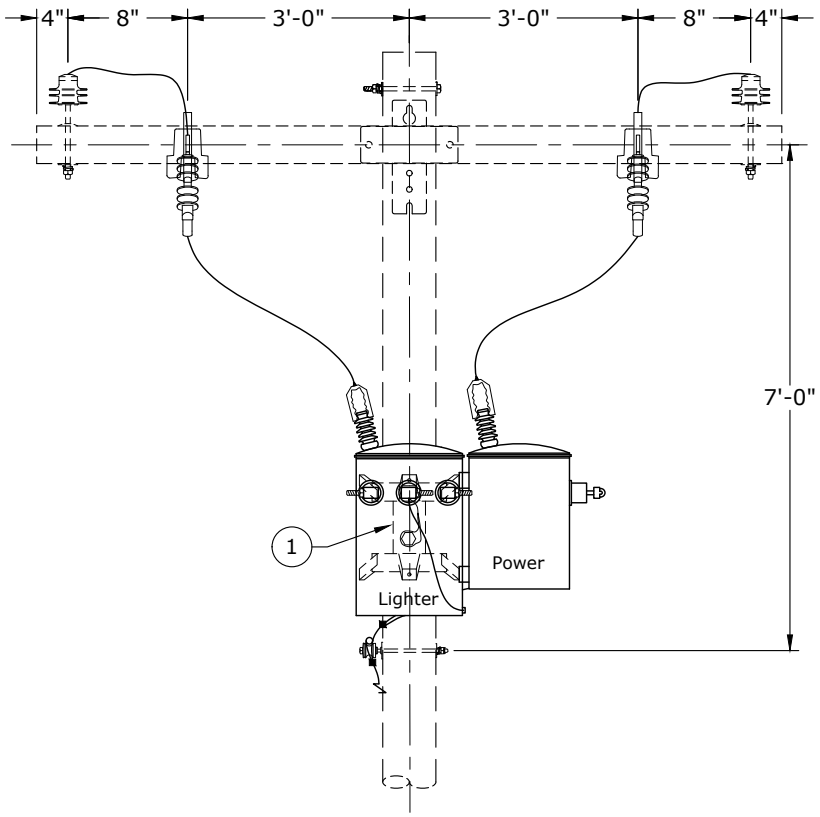

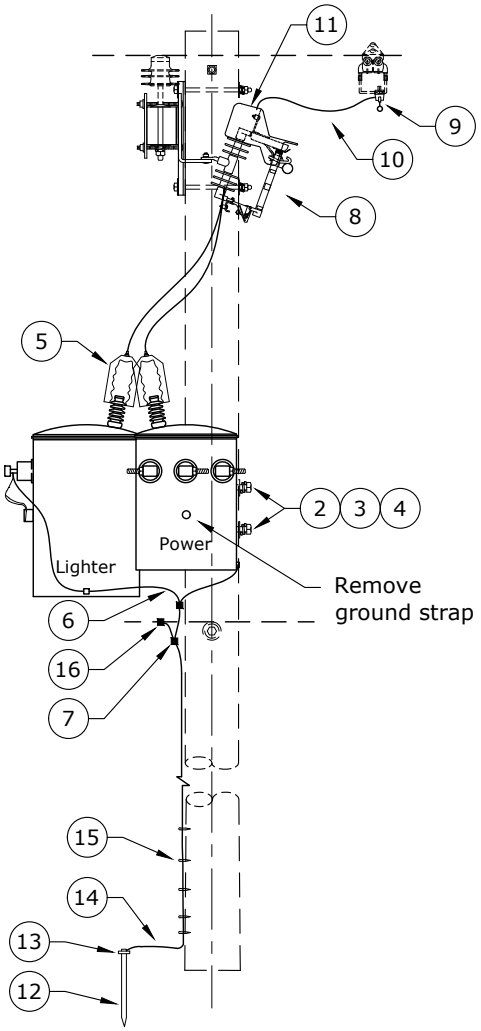

Notes:

1. See table for maximum weight on poles.
2. The lighter pot shall always be connected to the leading phase.
3. All tanks to be grounded.
4. Ground H2 bushing on all two-bushing transformers.
5. Use pre-drilled holes for transformers ensuring that tank does not rest on neutral.
6. For transformer secondary lead sizes, see
   Std TL1 - Transformer Lead Sizes Overhead Secondary, or
   Std TL2 - Large Transformer Lead Size Overhead Secondary.
7. For secondary connections see Std TC4 - Open Wye.
8. Call out on drawing as follows: T21-10-37 1/2

   Transformer sizes
9. Maximum motor size shall be 15 hp.
10. Fuse per Std F1 - Fuse Schedule Overhead Transformers.
11. Call for hot line stirrup separately. See table for size.

Class	Max Weight
4	1750 lb
2	3200 lb
1	4000 lb

Stirrup Size	S/N
#6 Solid -#6 Str Cu	2338
#4-2/0 Al/Cu	2339
397 MCM Al/Cu	2340
795 MCM Al/Cu	2341

Rev. 4 - Changed to wing transformer mount.

Clark Public Utilities

CONSTRUCTION STANDARDS

CROSSARM CONSTRUCTION
TWO TRANSFORMERS
OPEN WYE PRIMARY

REVISIONS

R	DATE	ENGR	OPS
1	3/02	REDRAWN	IN CAD
2	1/13/10	CM	AH
3	5/31/12	KJP	
4	12/9/22	CRM	GM

PAGE: 1 of 2

T21

CAD FILE: T21

APP: ELM
DATE: 1/31/80

SECTION 1100

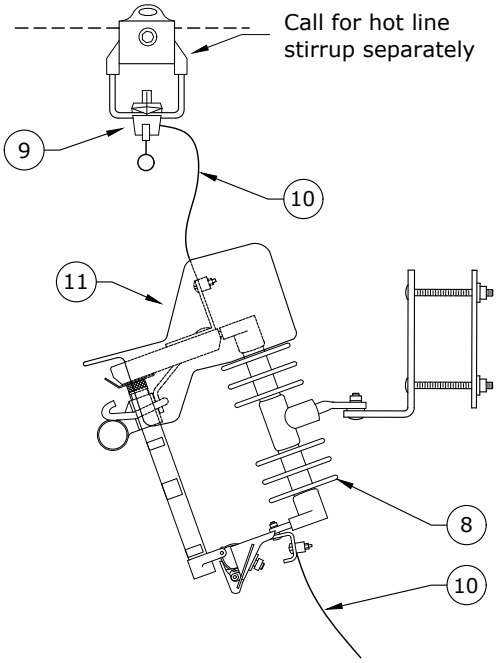

CO100

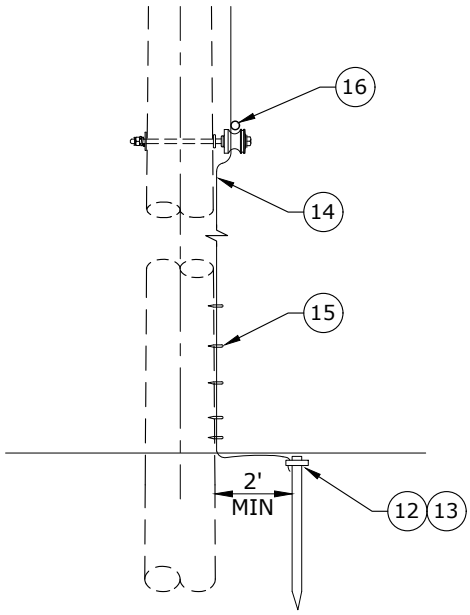

N1

Rev. 4 - Changed to wing transformer mount.

ITEM NO.	DESCRIPTION	T21 ADDITIONAL MATERIAL QTY.	S/N
1	Mount, Transfomer, Triple Wing, Al, 100 kVA Max	1	904
2	Bolt, Machine 3/4" x 16" Galv, 18,350 lb Ultimate	2	175
3	Washer, Curved, Square, Cast, 3" x 3" x 3/8" With 13/16" Hole, Galv	2	1392
4	Washer, Lock, Spring, Double Coil, Galv, 3/4"	2	2218
5	Guard, Wildlife, Tranformer Bushing	2	721
6	Conductor, OH, Cu, #4, Solid, Bare, Soft Drawn, 1C	15	376
7	Connector, Crimpet, Cu, Run & Tap #6 Sol - #4 Str (4C4)	2	450

ITEM NO.	DESCRIPTION	CO100 (2) QTY.	S/N
8	Cutout, Polymer, Universal, 100 Amp, 16 kA Asymmetrical	2	2532
9	Clamp, Hot Line, GP1530, Line #6 Solid - 400 MCM, Tap #6 Solid - 4/0 Str, Cu Only	2	284
10	Conductor, OH, 600V, Cu, #4, 7-Str, XLPE, 60 mil, Soft-drawn, 1C, RHW-2	30	391✲
11	Guard, Wildlife, Cutout, Polymer	2	2928

ITEM NO.	DESCRIPTION	N1 QTY.	S/N
12	Rod, Ground, 5/8" x 8'	2	1124
13	Clamp, Ground Rod, 5/8", Small, Bronze	2	281
14	Conductor, Copper-Clad Steel, Black w/ Green Strip, #4 Cu Equivalent, 40% Annealed	100	1512
15	Staple, Ground, Barbed, Galvanized, 1 1/2"	40	2707
16	Connector, H-Tap, Al/Cu, Run #2-2/0 Str - Tap #6-#1 Str	1	413

Clark Public Utilities

CONSTRUCTION STANDARDS

CROSSARM CONSTRUCTION
TWO TRANSFORMERS
OPEN WYE PRIMARY

REVISIONS

R	DATE	ENGR	OPS
1	3/02	REDRAWN	IN CAD
2	1/13/10	CM	AH
3	5/31/12	KJP	
4	12/9/22	CRM	GM

PAGE: 2 of 2

T21

CAD FILE: T21

APP: ELM

DATE: 1/31/80

SECTION 1100

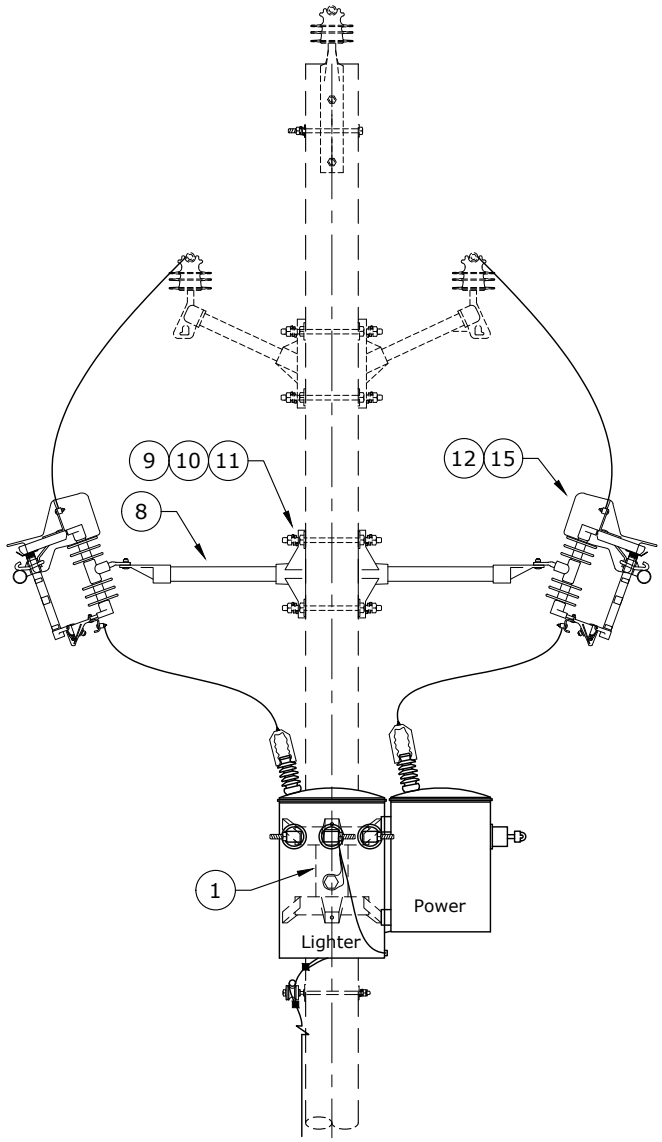

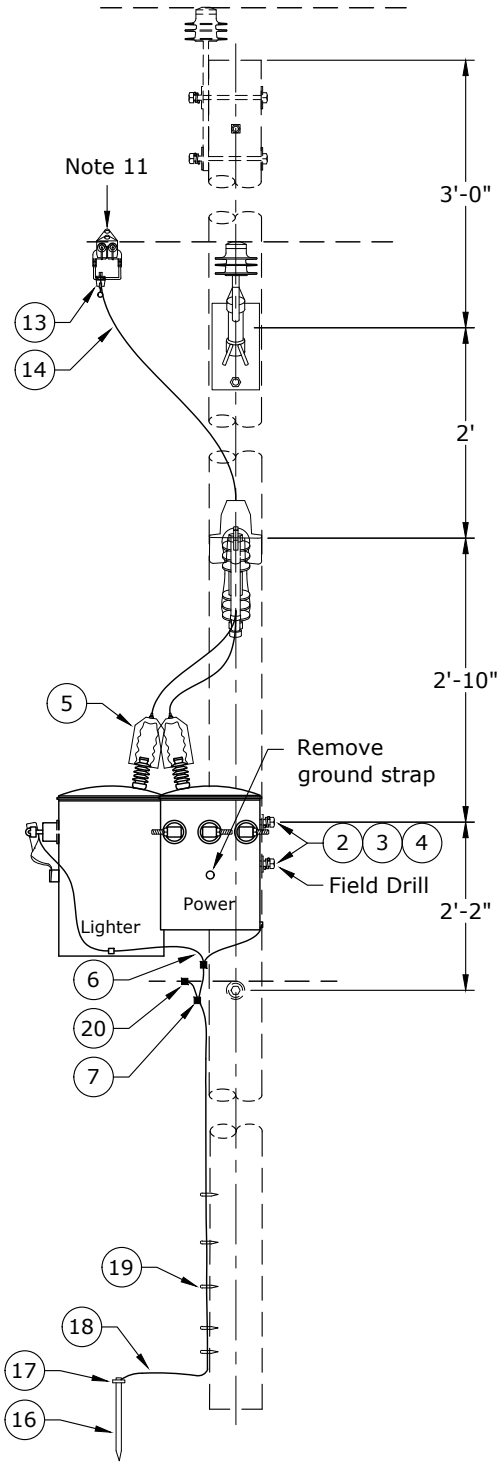

Notes:

1. See table for maximum weight on poles.
2. The lighter pot shall always be connected to the leading phase.
3. All tanks to be grounded.
4. Ground H2 bushing on all two-bushing transformers.
5. Use pre-drilled holes for transformers ensuring that tank does not rest on neutral.
6. For transformer secondary lead sizes, see
   Std TL1 - Transformer Lead Sizes Overhead Secondary, or
   Std TL2 - Large Transformer Lead Size Overhead Secondary.
7. For secondary connections see Std TC4 - Open Wye.
8. Call out on drawing as follows: T23-10-37 1/2

   Transformer sizes
9. Maximum motor size shall be 15 hp.
10. Fuse per Std F1 - Fuse Schedule Overhead Transformers.
11. Call for hot line stirrup separately. See table for size.

Stirrup Size	S/N
#6 SLD-#6 STR Cu	2338
#4-2/0 Al/Cu	2339
397 MCM Al/Cu	2340
795 MCM Al/Cu	2341

Class	Max Weight
4	1750 lb
2	3200 lb
1	4000 lb

Rev. 4 - Changed to wing transformer mount and fiberglass cutout mounts.

Clark Public Utilities

CONSTRUCTION STANDARDS

TWIGGY CONSTRUCTION
TWO TRANSFORMERS
OPEN WYE PRIMARY

REVISIONS

R	DATE	ENGR	OPS
1	3/02	REDRAWN	IN CAD
2	1/13/10	CM	AH
3	5/31/12	KJP	
4	12/9/22	CRM	GM

PAGE: 1 of 2

T23

CAD FILE: T23

APP: ELM
DATE: 1/31/80

SECTION 1100

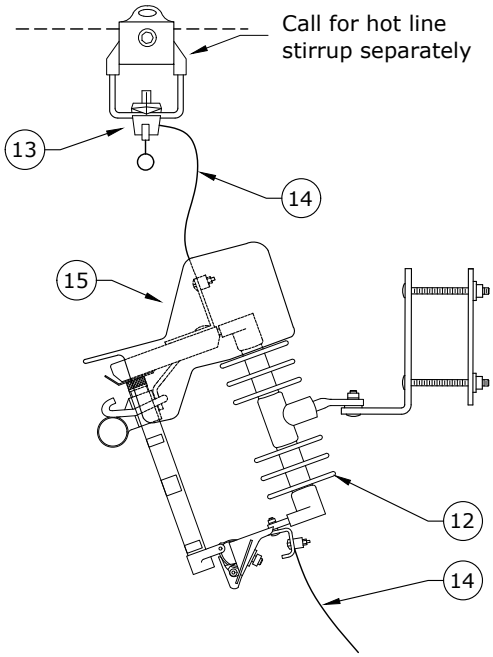

CO100

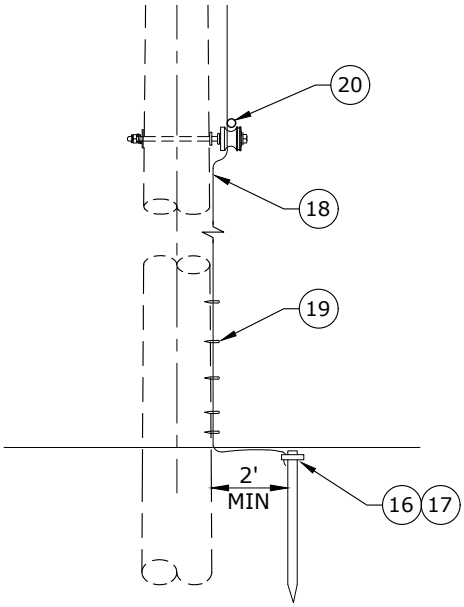

N1

Rev. 4 - Changed to wing transformer mount and fiberglass cutout mounts.

ITEM NO.	DESCRIPTION	T23 ADDITIONAL MATERIAL QTY.	S/N
1	Mount, Transfomer, Triple Wing, Al, 100 kVA Max	1	904
2	Bolt, Machine 3/4" x 16" Galv, 18,350 lb Ultimate	2	175
3	Washer, Curved, Square, Cast, 3" x 3" x 3/8" With 13/16" Hole, Galv	2	1392
4	Washer, Lock, Spring, Double Coil, Galv, 3/4"	2	2218
5	Guard, Wildlife, Tranformer Bushing	2	721
6	Conductor, OH, Cu, #4, Solid, Bare, Soft Drawn, 1C	15	376
7	Connector, Crimpet, Cu, Run & Tap #6 Sol - #4 Str (4C4)	2	450
8	Bracket, Cutout Mount, 1 Phase, 18" Fiberglass	2	2998
9	Bolt, Double Arm, 5/8" x 18", Galv., 12,400 lb Ultimate Tensile	2	82
10	Washer, Flat Round Galv., 5/8"	4	1395
11	Washer, Lock, Spring, Double Coil, Galv., 5/8"	4	2217
ITEM NO.	DESCRIPTION	CO100 (2) QTY.	S/N
12	Cutout, Polymer, Universal, 100 Amp, 16 kA Asymmetrical	2	2532
13	Clamp, Hot Line, GP1530, Line #6 Solid - 400 MCM, Tap #6 Solid - 4/0 Str, Cu Only	2	284
14	Conductor, OH, 600V, Cu, #4, 7-Str, XLPE, 60 mil, Soft-drawn, 1C, RHW-2	30	391✲
15	Guard, Wildlife, Cutout, Polymer	2	2928
ITEM NO.	DESCRIPTION	N1 QTY.	S/N
16	Rod, Ground, 5/8" x 8'	2	1124
17	Clamp, Ground Rod, 5/8", Small, Bronze	2	281
18	Conductor, Copper-Clad Steel, Black w/ Green Strip, #4 Cu Equivalent, 40% Annealed	100	1512
19	Staple, Ground, Barbed, Galvanized, 1 1/2"	40	2707
20	Connector, H-Tap, Al/Cu, Run #2-2/0 Str - Tap #6-#1 Str	1	413

Clark Public Utilities

CONSTRUCTION STANDARDS

TWIGGY CONSTRUCTION
TWO TRANSFORMERS
OPEN WYE PRIMARY

REVISIONS

R	DATE	ENGR	OPS
1	3/02	REDRAWN	IN CAD
2	1/13/10	CM	AH
3	5/31/12	KJP	
4	12/9/22	CRM	GM

PAGE: 2 of 2 | T23 | CAD FILE: T23

APP: ELM
DATE: 1/31/80

SECTION 1100

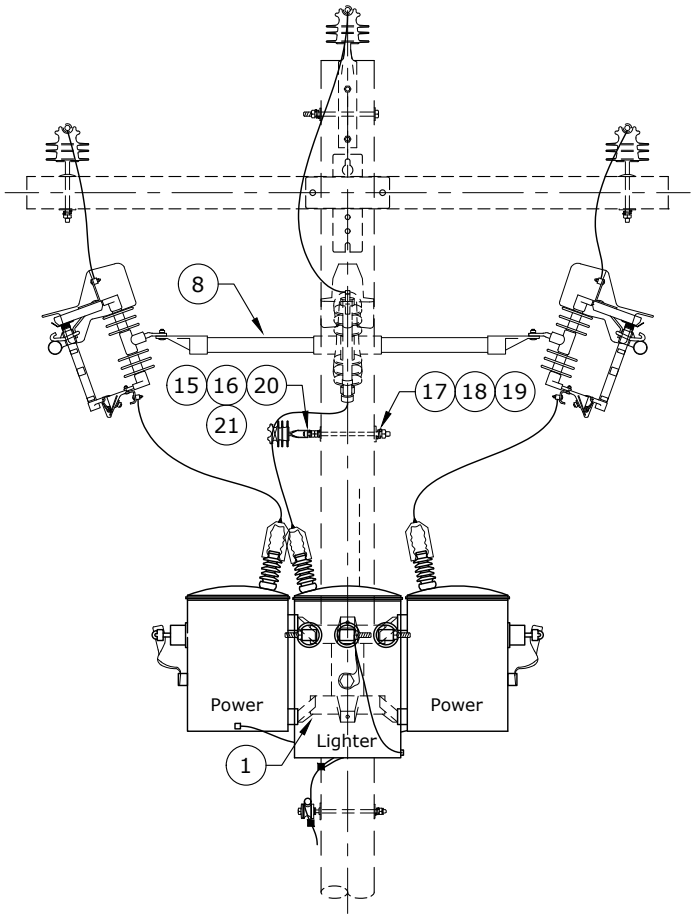

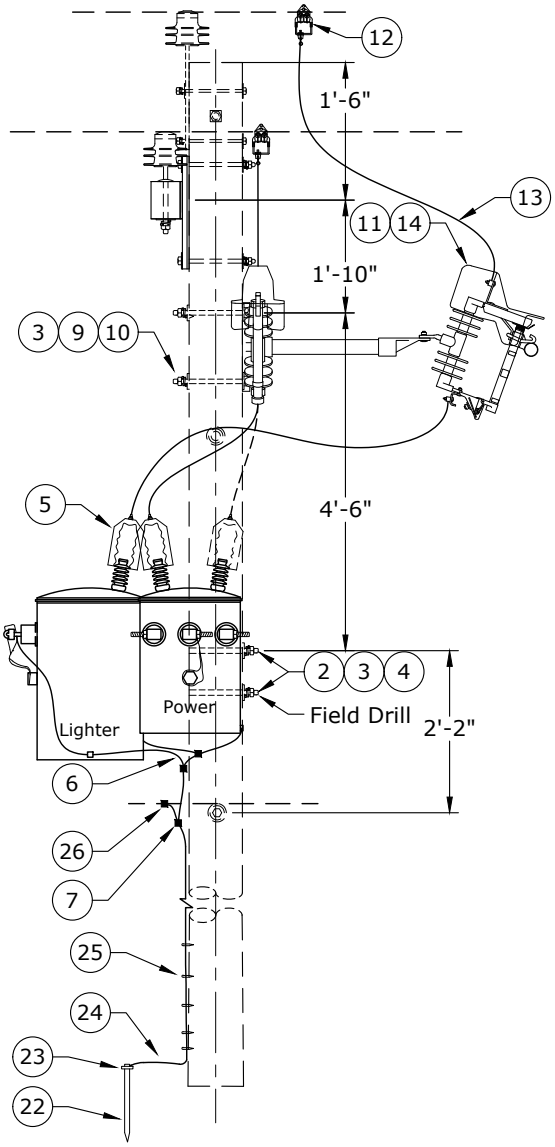

Notes:

1. See table for maximum weight on poles.
2. To determine the total transformer weight take three times the weight of the heaviest.
3. All tanks to be grounded.
4. Ground the H2 bushing on all two-bushing transformers.
5. Use pre-drilled holes for transformers, ensuring that tank does not rest on neutral.
6. For transformer secondary lead sizes, see
   Std TL1 - Transformer Lead Sizes Overhead Secondary, or
   Std TL2 - Large Transformer Lead Size Overhead Secondary.
7. For secondary connections see the Std TC7 - Grounded Wye-Wye.
8. Call out on drawing as follows: T31-25-25-25

   Transformer sizes
9. Fuse per Std F1 - Fuse Schedule Overhead Transformers.
10. Call for hot line stirrup separately. See table for size.

Class	Max Weight
4	1750 lb
2	3200 lb
1	4000 lb

Stirrup Size	S/N
#6 Solid -#6 Str Cu	2338
#4-2/0 Al/Cu	2339
397 MCM Al/Cu	2340
795 MCM Al/Cu	2341

Rev. 4 - Changed to wing transformer mount and fiberglass equipment mount.

Clark Public Utilities

CONSTRUCTION STANDARDS

THREE TRANSFORMERS
GROUNDED Y - GROUNDED Y

REVISIONS

R	DATE	ENGR	OPS
1	7/02		
2	1/13/10	CM	AH
3	5/31/12	KJP	
4	12/9/22	CRM	GM

PAGE: 1 of 2

T31

CAD FILE: T31

APP: ELM
DATE: 1/31/80

SECTION 1100

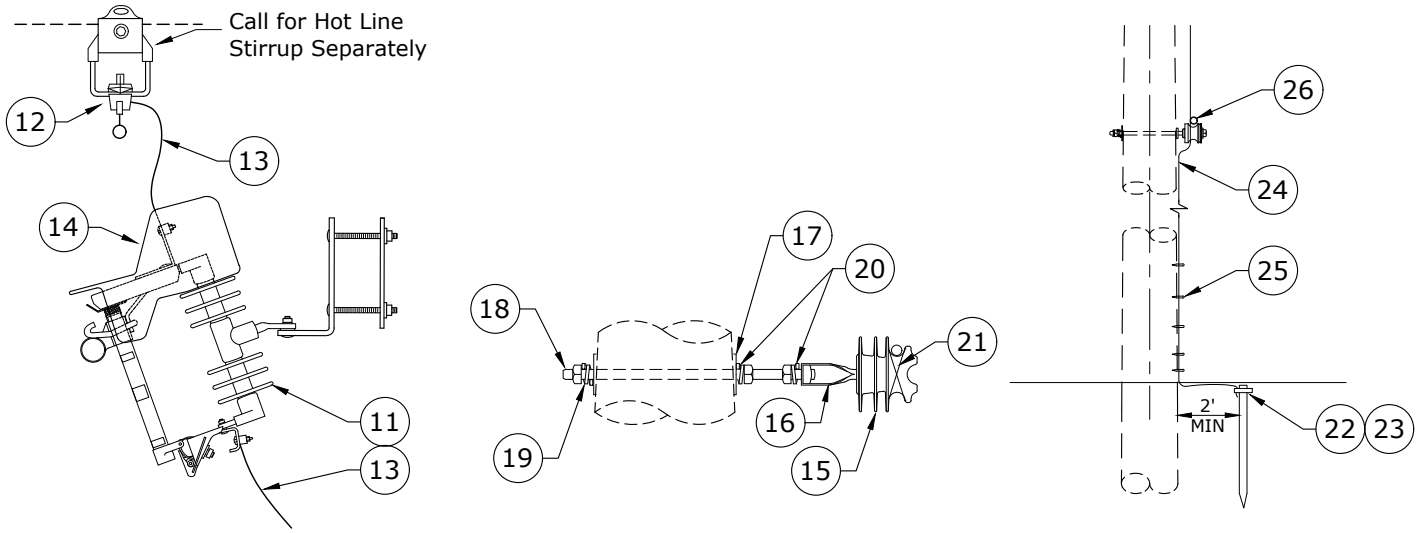

CO100 **PR20TREE** **N1**

Rev. 4 - Changed to wing transformer mount and fiberglass equipment mount.

ITEM NO.	DESCRIPTION	T31 ADDITIONAL MATERIAL QTY.	S/N
1	Mount, Transfomer, Triple Wing, Al, 100 kVA Max	1	904
2	Bolt, Machine 3/4" x 16" Galv, 18,350 lb Ultimate	2	175
3	Washer, Curved, Square, Cast, 3" x 3" x 3/8" With 13/16" Hole, Galv	4	1392
4	Washer, Lock, Spring, Double Coil, Galv, 3/4"	2	2218
5	Guard, Wildlife, Tranformer Bushing	3	721
6	Conductor, OH, Cu, #4, Solid, Bare, Soft Drawn, 1C	20	376
7	Connector, Crimpet, Cu, Run & Tap #6 Sol - #4 Str (4C4)	3	450
8	Bracket, Cutout Mount, 3 Phase, 18" Fiberglass	2	2999
9	Bolt, Machine, 5/8" x 16", Galv, 12,400 lb Ultimate Tensile	2	157
10	Washer, Lock, Spring, Double Coil, Galv, 5/8"	2	2217
ITEM NO.	DESCRIPTION	CO100 (3) QTY.	S/N
11	Cutout, Polymer, Universal, 100 Amp, 16 kA Asymmetrical	3	2532
12	Clamp, Hot Line, GP1530, Line #6 Solid - 400 MCM, Tap #6 Solid - 4/0 Str, Cu Only	3	284
13	Conductor, OH, 600V, Cu, #4, 7-Str, XLPE, 60 mil, Soft-drawn, 1C, RHW-2	45	391 ✲
14	Guard, Wildlife, Cutout, Polymer	3	2928
ITEM NO.	DESCRIPTION	PR20TREE QTY.	S/N
15	Insulator, Pin, C Neck, Polymer	1	1968
16	Pin, Adapter	1	959
17	Washer, Curved, Square, Cast, 3" x 3" x 3/8" Thick x 13/16" Hole	2	1392
18	Bolt, Double Arm, 5/8" x 16" Galv., 12,400 lbs Ultimate Tensile	1	81
19	Washer, Lock, Spring, Double Coil, Galv., 5/8"	1	2217
20	Washer, Lock, Spring, Single Coil, Galv., 5/8"	2	1403
21	Wire, Tie, Al #4 Solid with 45mil TPR Jacket	11	3012
ITEM NO.	DESCRIPTION	N1 QTY.	S/N
22	Rod, Ground, 5/8" x 8'	2	1124
23	Clamp, Ground Rod, 5/8", Small, Bronze	2	281
24	Conductor, Copper-Clad Steel, Black w/ Green Stripe, #4 Cu Equivalent, 40% Annealed	100	1512
25	Staple, Ground, Barbed, Galvanized, 1 1/2"	40	2707
26	Connector, H-Tap, Al/Cu, Run #2-2/0 Str - Tap #6-#1 Str	1	413

Clark Public Utilities

CONSTRUCTION STANDARDS

THREE TRANSFORMERS
GROUNDED Y - GROUNDED Y

REVISIONS

R	DATE	ENGR	OPS
1	7/02		
2	1/13/10	CM	AH
3	5/31/12	KJP	
4	12/9/22	CRM	GM

PAGE: 2 of 2 | T31 | CAD FILE: T31 | APP: ELM | DATE: 1/31/80 | SECTION 1100

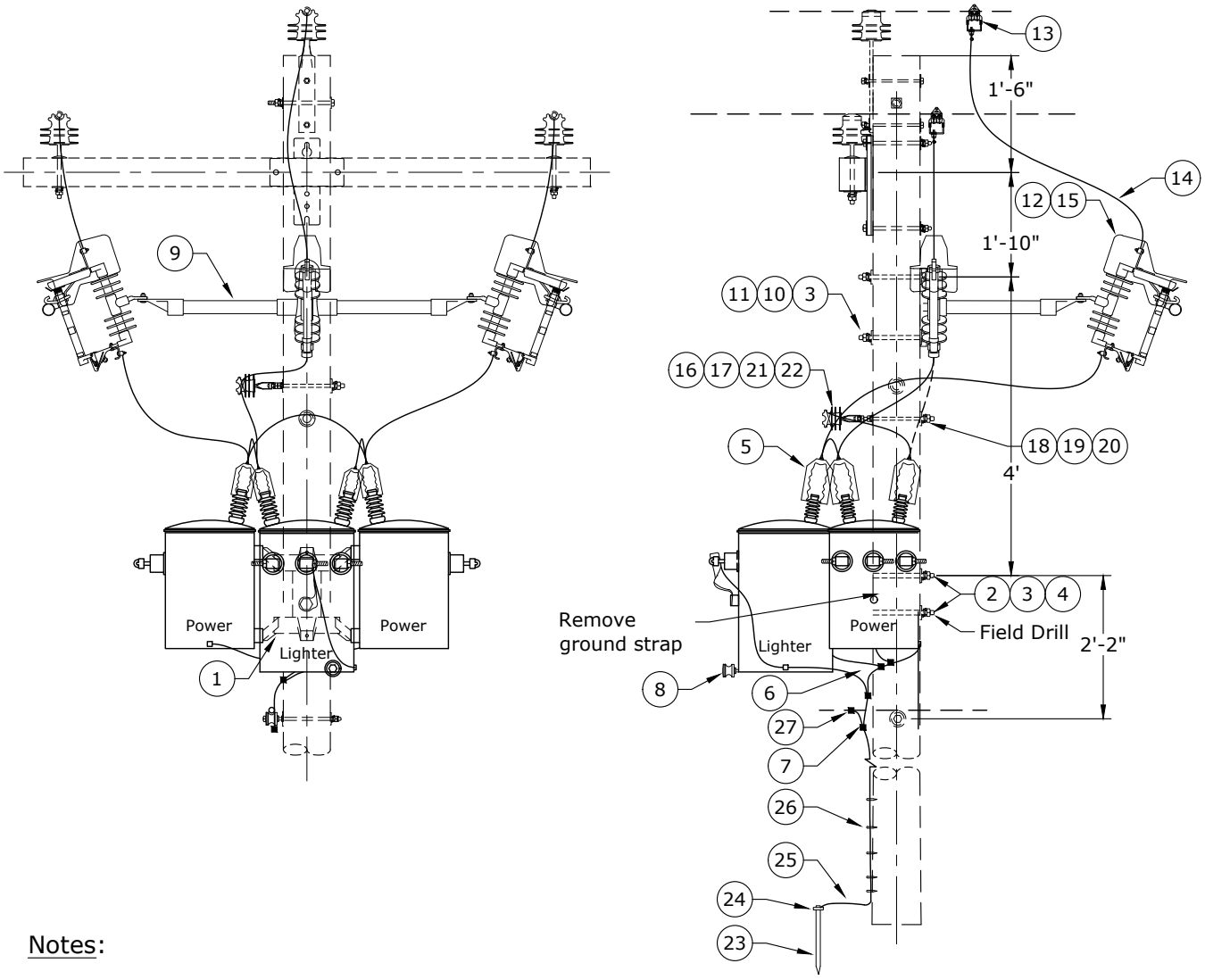

Notes:

1. See chart for maximum weight on poles.
2. To determine the total transformer weight take three times the weight of the heaviest.
3. All tanks to be grounded.
4. Use pre-drilled holes for transformers, ensuring that tank does not rest on neutral.
5. For transformer secondary lead sizes, see
   Std TL1 - Transformer Lead Sizes Overhead Secondary, or
   Std TL2 - Large Transformer Lead Size Overhead Secondary.
6. For secondary connections see the Std TC5 - Delta-Delta.
7. Transformer impedances must satisfy Std TC5A - Delta-Delta Impedance Matching.
8. Call out on drawing as follows: T32-25-50-25

   Transformer sizes
9. Fuse per Std F1 - Fuse Schedule Overhead Transformers.
10. Call for hot line stirrup separately. See table for size.

Class	Max Weight
4	1750 lb
2	3200 lb
1	4000 lb

Stirrup Size	S/N
#6 SLD-#6 STR Cu	2338
#4-2/0 Al/Cu	2339
397 MCM Al/Cu	2340
795 MCM Al/Cu	2341

Rev. 4 - Changed to wing transformer mount and fiberglass cutout mount.

Clark Public Utilities

CONSTRUCTION STANDARDS

THREE TRANSFORMERS
CLOSED Δ - CLOSED Δ

REVISIONS

R	DATE	ENGR	OPS
1	7/02	Redrawn	in CAD
2	1/13/10	CM	AH
3	5/31/12	KJP	
4	12/9/22	CRM	GM

PAGE: 1 of 2

T32

CAD FILE: T32

APP: ELM
DATE: 1/31/80

SECTION 1100

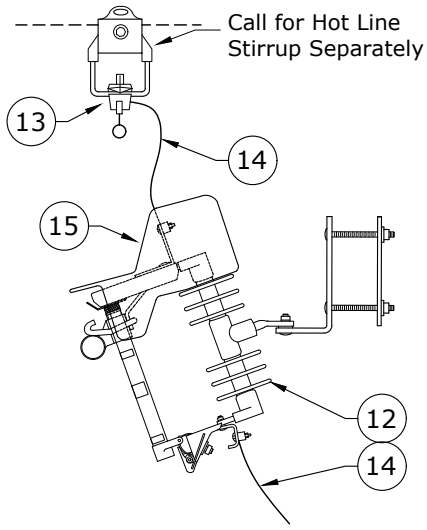

CO100

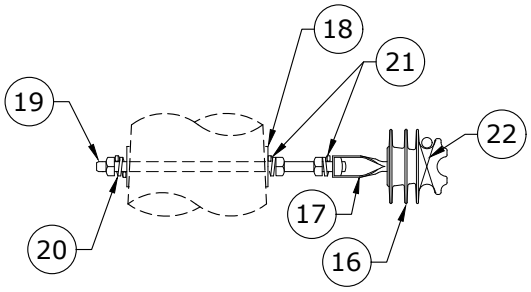

PR20TREE

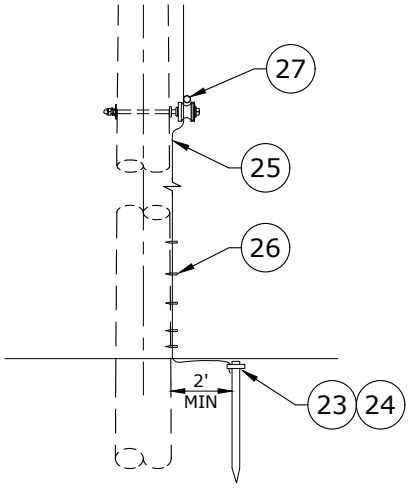

N1

Rev. 4 - Changed to wing transformer mount and fiberglass cutout mount.

ITEM NO.	DESCRIPTION	T23 ADDITIONAL MATERIAL QTY.	S/N
1	Mount, Transfomer, Triple Wing, Al, 100 kVA Max	1	904
2	Bolt, Machine 3/4" x 16" Galv, 18,350 lb Ultimate	2	175
3	Washer, Curved, Square, Cast, 3" x 3" x 3/8" With 13/16" Hole, Galv	4	1392
4	Washer, Lock, Spring, Double Coil, Galv, 3/4"	2	2218
5	Guard, Wildlife, Tranformer Bushing	6	721
6	Conductor, OH, Cu, #4, Solid, Bare, Soft Drawn, 1C	20	376
7	Connector, Crimpet, Cu, Run & Tap #6 Sol - #4 Str (4C4)	4	450
8	Bracket, Transformer Clearance with Insulator	1	234
9	Bracket, Cutout Mount, 3 Phase, 18" Fiberglass	2	2999
10	Bolt, Machine, 5/8" x 16", Galv., 12,400 lb Ultimate Tensile	2	157
11	Washer, Lock, Spring, Double Coil, Galv, 5/8"	2	2217
ITEM NO.	DESCRIPTION	CO100 (3) QTY.	S/N
12	Cutout, Polymer, Universal, 100 Amp, 16 kA Asymmetrical	3	2532
13	Clamp, Hot Line, GP1530, Line #6 Solid - 400 MCM, Tap #6 Solid - 4/0 Str, Cu Only	3	284
14	Conductor, OH, 600V, Cu, #4, 7-Str, XLPE, 60 mil, Soft-drawn, 1C, RHW-2	45	391✲
15	Guard, Wildlife, Cutout, Polymer	3	2928
ITEM NO.	DESCRIPTION	PR20TREE QTY.	S/N
16	Insulator, Pin, C Neck, Polymer	1	1968
17	Pin, Adapter	1	959
18	Washer, Curved, Square, Cast, 3" x 3" x 3/8" Thick x 13/16" Hole	2	1392
19	Bolt, Double Arm, 5/8" x 16" Galv., 12,400 lbs Ultimate Tensile	1	81
20	Washer, Lock, Spring, Double Coil, Galv., 5/8"	1	2217
21	Washer, Lock, Spring, Single Coil, Galv., 5/8"	2	1403
22	Wire, Tie, Al #4 Solid with 45mil TPR Jacket	11	3012
ITEM NO.	DESCRIPTION	N1 QTY.	S/N
23	Rod, Ground, 5/8" x 8'	2	1124
24	Clamp, Ground Rod, 5/8", Small, Bronze	2	281
25	Conductor, Copper-Clad Steel, Black w/ Green Stripe, #4 Cu Equivalent, 40% Annealed	100	1512
26	Staple, Ground, Barbed, Galvanized, 1 1/2"	40	2707
27	Connector, H-Tap, Al/Cu, Run #2-2/0 Str - Tap #6-#1 Str	1	413

Clark Public Utilities

CONSTRUCTION STANDARDS

THREE TRANSFORMERS
CLOSED Δ - CLOSED Δ

REVISIONS

R	DATE	ENGR	OPS
1	7/02	Redrawn	in CAD
2	1/13/10	CM	AH
3	5/31/12	KJP	
4	12/9/22	CRM	GM

PAGE: 2 of 2 | T32 | CAD FILE: T32 | APP: ELM | DATE: 1/31/80 | SECTION 1100

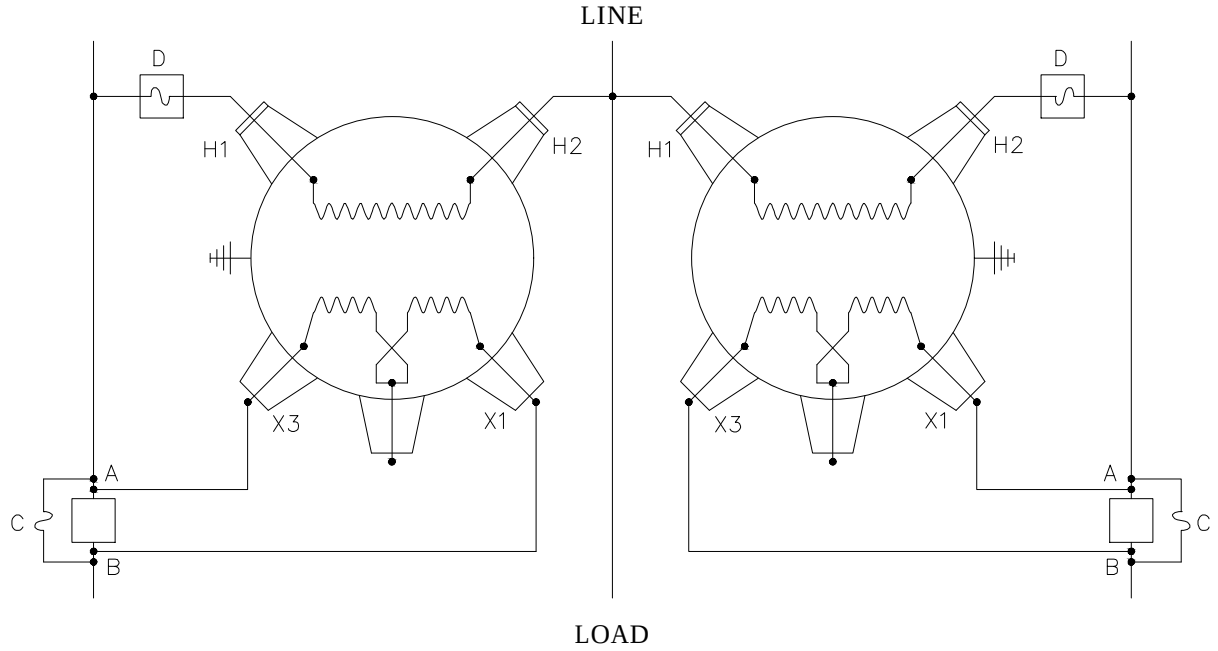

INSTALLATION PROCEDURE:

1. Cut in breaker between point "A" & "B" while keeping circuit closed with a jumper. Install C/O fused just above line current at "C". Close C/O and remove jumper.
2. Install slugged C/O at "D", leave open and connect primary leads to line and transformer.
3. Connect other side of high voltage winding to the line.
4. Install leads from secondary side of transformer to points "A"&"B" as required by desired installation.
5. Repeat procedure for other side.
6. Close C/O at "D" which blows fuse at "C".
7. Remove C/O at "C".
8. Jumper out C/O at "D" and remove.

REMOVAL PROCEDURE:

1. Install fused C/O at "D". Use transformer size fuse.
2. Install slugged C/O at "C", -leave open.
3. Repeat procedure for other side.
4. CLose C/O at "C" which blows fuse at "D". Transformers are now out of circuit but still HOT.
5. Remove transformer secondary leads at points "A"&"B".
6. Remove primary leads. Transformers are now dead.
7. Remove breaker between points "A"&"B" or install jumper.
8. Remove C/O at "C".

Notes:

1. For 1Ø installations follow same procedure.
2. When it is desireable to leave bank in for future use, stop at step 4 of removal procedure.

CAUTION

1. When C/O's are left in the circuit they must be slugged.
2. Do not open "D" when "C" is open.
3. Install case ground before energizing bank.

WARNING:

The transformer should not be fused or have any device by which it can be readily disconnected. The primary must never be opened while the secondary position carries current, as dangerous voltages will be induced by the series winding.

Clark Public Utilities

CONSTRUCTION STANDARDS

1Ø & 3Ø, 2 WINDING BOOST OR BUCK
TRANSFORMER BANK
INSTALLATION & REMOVAL PROCEDURE

REVISIONS

R	DATE	ENGR	OPS
1	3/02		

1 REDRAWN IN CAD

PAGE:		CAD FILE:	APP: ELM	SECTION
1 of 1	TC2A	TC2A	DATE: 1/31/80	1100

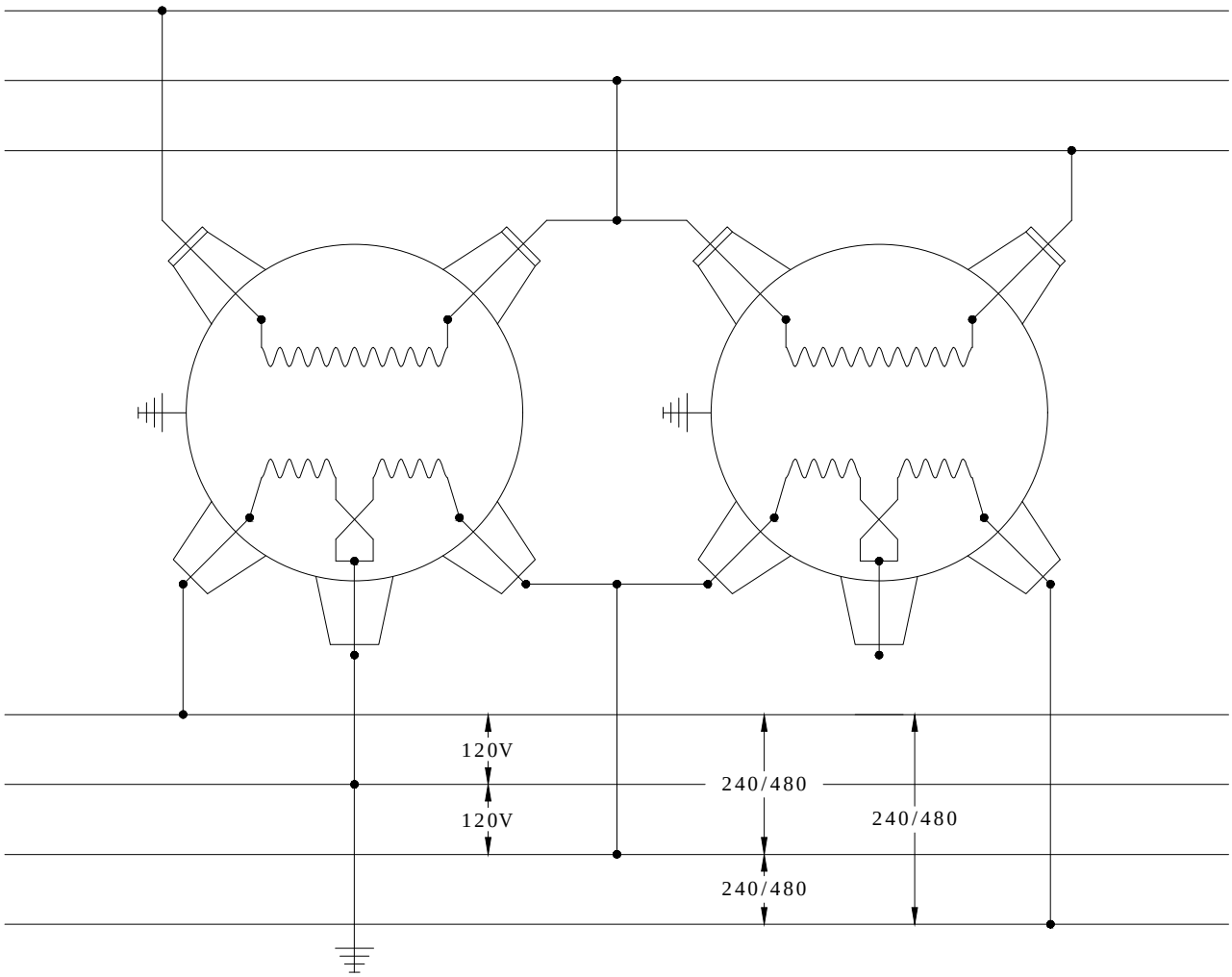

Notes:

1. Extend case ground wire to secondary neutral bushing on lighter transformer only.
2. For 3Ø 3 wire omit neutral installation and secondary grounds.

Clark Public Utilities

CONSTRUCTION STANDARDS

3Ø OPEN DELTA
FOR 120/240 3Ø 4-WIRE,
240 3Ø 3-WIRE, 480V 3Ø 3-WIRE

REVISIONS

R	DATE	ENGR	OPS
1	3/02		

1 REDRAWN IN CAD

PAGE: 1 of 1

TC3

CAD FILE: TC3

APP: ELM

DATE: 1/31/80

SECTION 1100

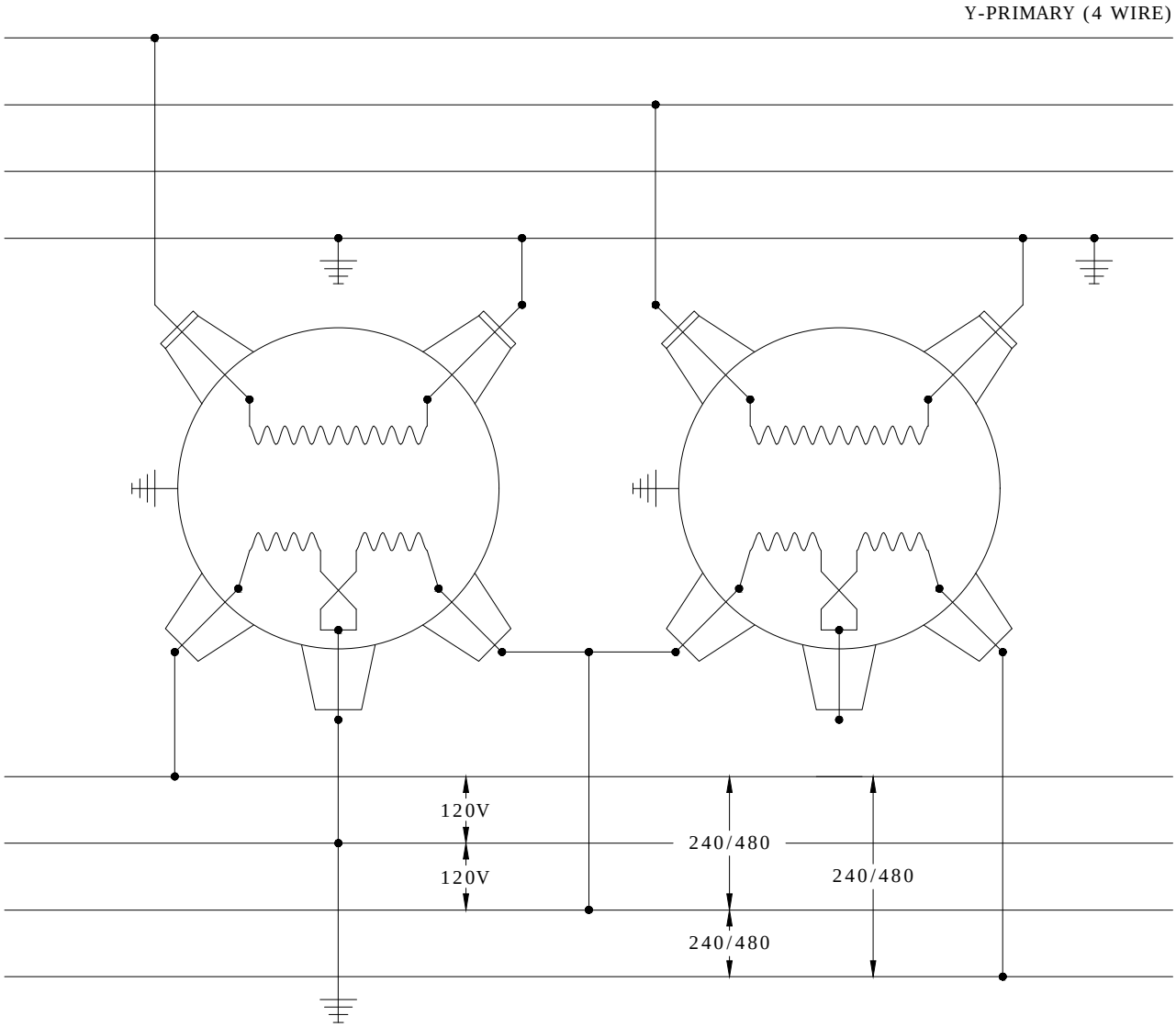

Notes:

1. Extend case ground wire to secondary neutral bushing on lighter transformer only.
2. For 3Ø 3 wire omit neutral installation and secondary grounds.

Clark Public Utilities

CONSTRUCTION STANDARDS

3Ø OPEN-WYE OPEN-DELTA
FOR 120/240 3Ø 4-WIRE,
240 3Ø 3-WIRE, 480V 3Ø 3-WIRE

REVISIONS

R	DATE	ENGR	OPS
1	3/02		

1 REDRAWN IN CAD

PAGE: 1 of 1

TC4

CAD FILE: TC4

APP: ELM

DATE: 1/31/80

SECTION 1100

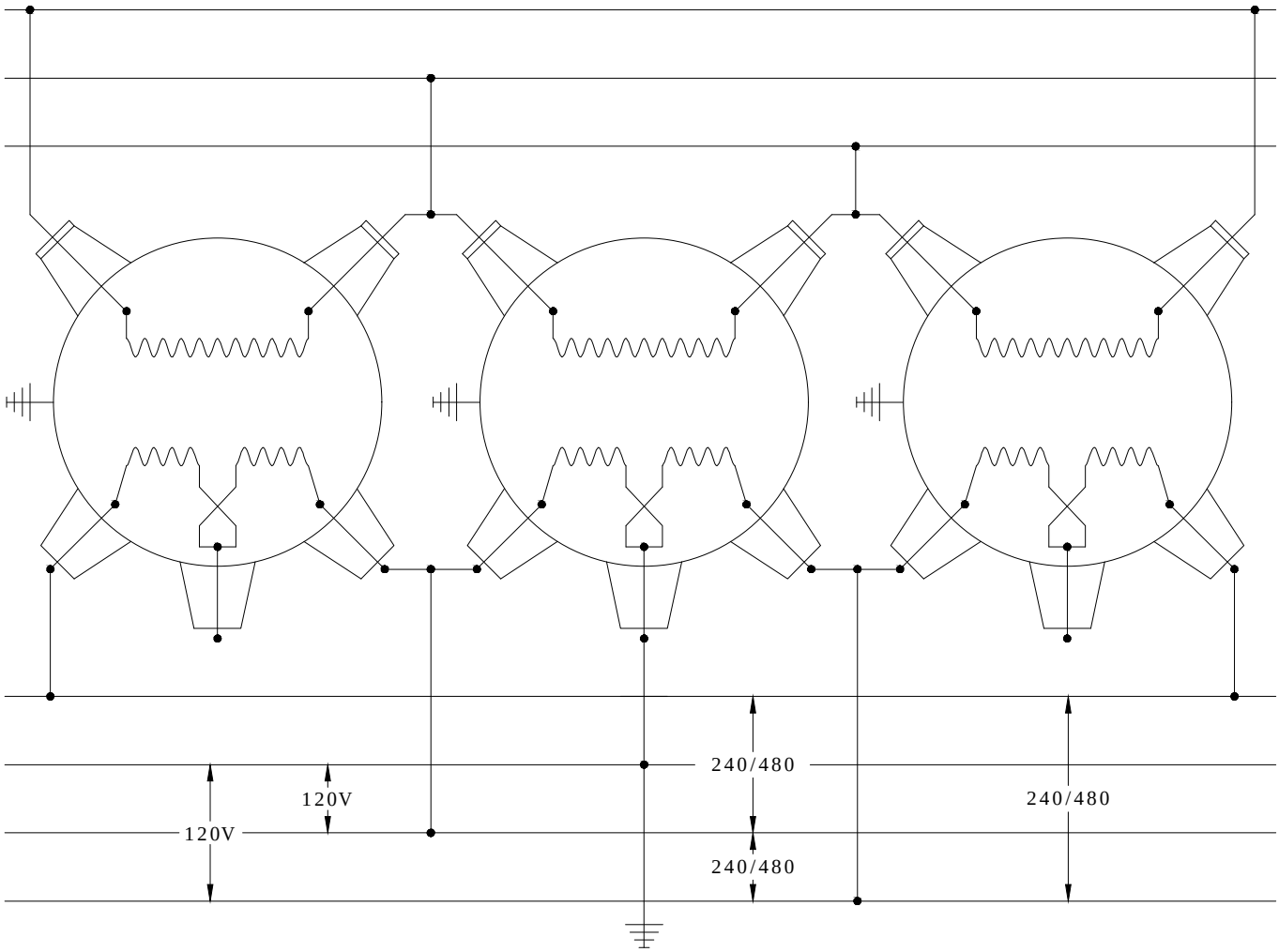

Notes:

1. Extend case ground wire to secondary neutral bushing on lighter transformer only.
2. For 3Ø 3 wire omit neutral installation and secondary grounds.

Clark Public Utilities

CONSTRUCTION STANDARDS

3Ø DELTA-DELTA
FOR 120/240 3Ø 4-WIRE,
240 3Ø 3-WIRE, 480V 3Ø 3-WIRE

REVISIONS

R	DATE	ENGR	OPS
1	3/02		

1 REDRAWN IN CAD

PAGE: 1 of 1

TC5

CAD FILE: TC5

APP: ELM

DATE: 1/31/80

SECTION 1100

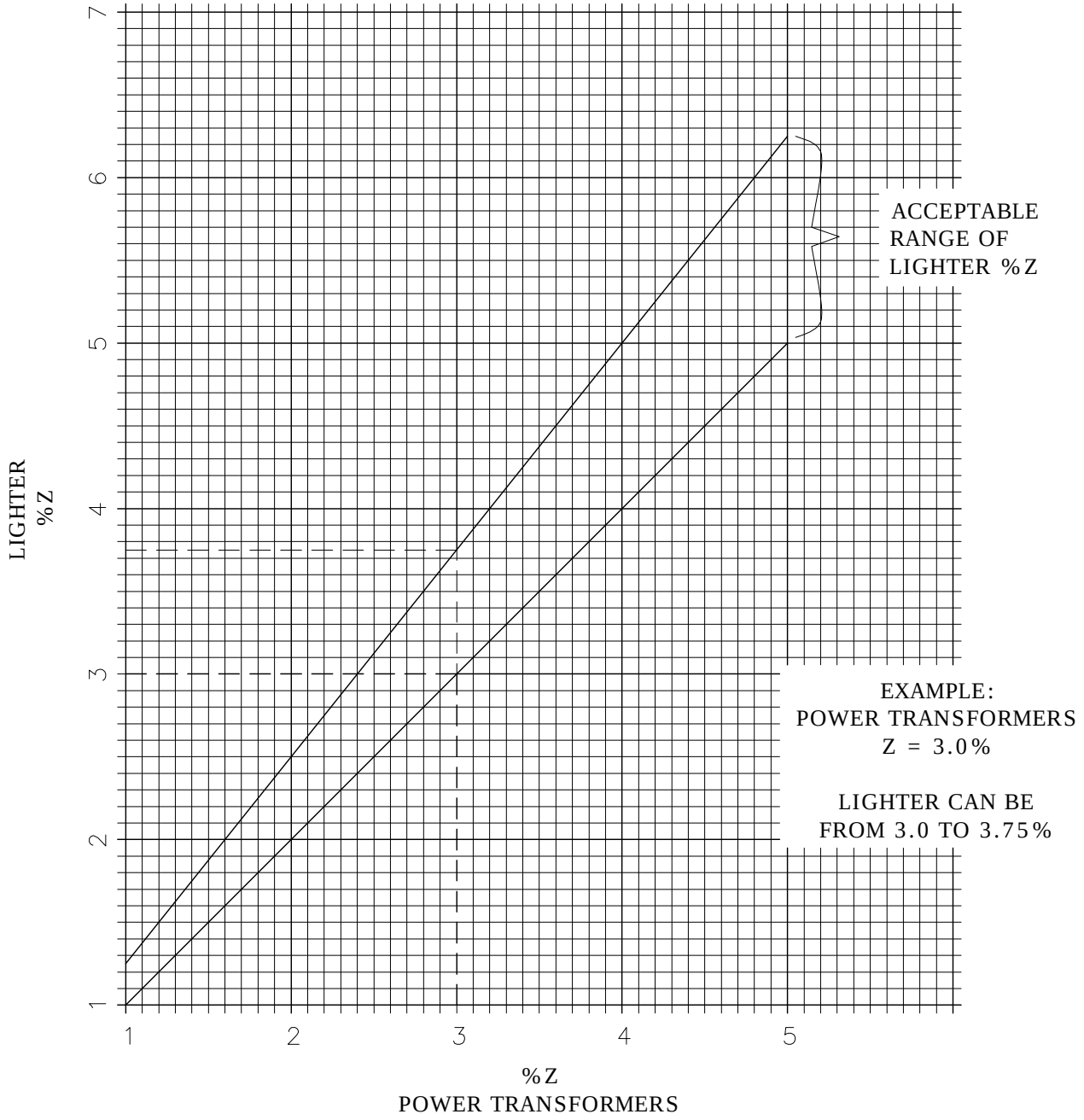

Notes:

1. Voltages and tap position must match on all three transformers.
2. Impedances should be matched. If not, the lighter may have up to 25% higher impedance than either power transformer.
3. If the impedances in note 2 can not be obtained, go to the next larger KVA.
4. If a power transformer must be replaced it must match the existing unit. If this is not possible then replace both transformers.

Clark Public Utilities

CONSTRUCTION STANDARDS

3Ø DELTA-DELTA CLOSED BANKS
FOR 120/240 3Ø 4-WIRE,
240 3Ø 3-WIRE, 480V 3Ø 3-WIRE

REVISIONS

R	DATE	ENGR	OPS
1	3/02		

1 REDRAWN IN CAD

PAGE: 1 of 1

TC5A

CAD FILE: TC5A

APP: ELM

DATE: 1/31/80

SECTION 1100

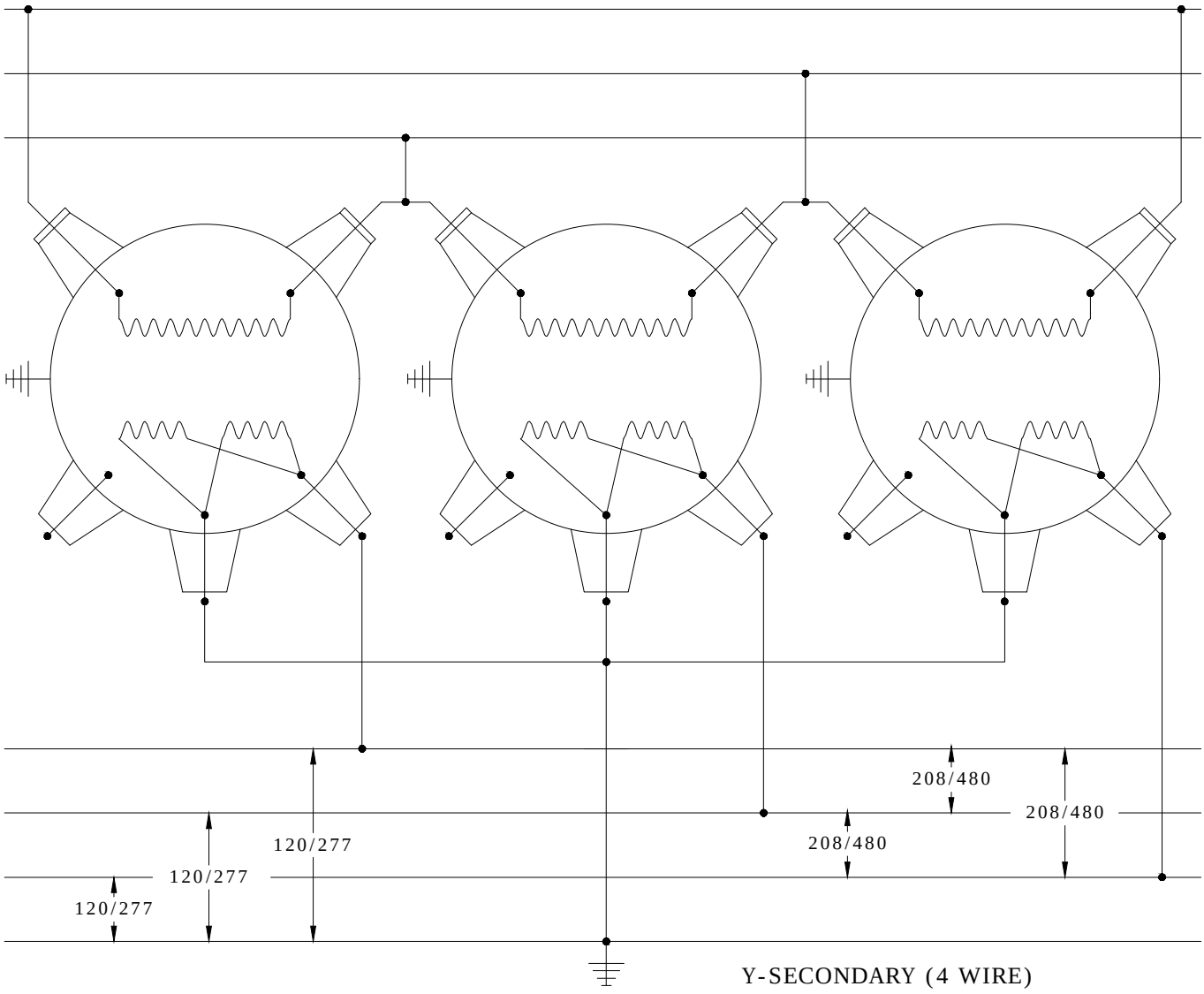

Notes:

1. Extend case ground wire to secondary bushing.
2. Use transformers with 277V secondary rating to obtain 277/480V.

Clark Public Utilities

CONSTRUCTION STANDARDS

3Ø DELTA WYE
FOR 120/208 OR 277/480V SERVICE

REVISIONS			
R	DATE	ENGR	OPS
1	3/02		

1 REDRAWN IN CAD

PAGE:		CAD FILE:	APP: ELM	SECTION
1 of 1	TC6	TC6	DATE: 1/31/80	1100

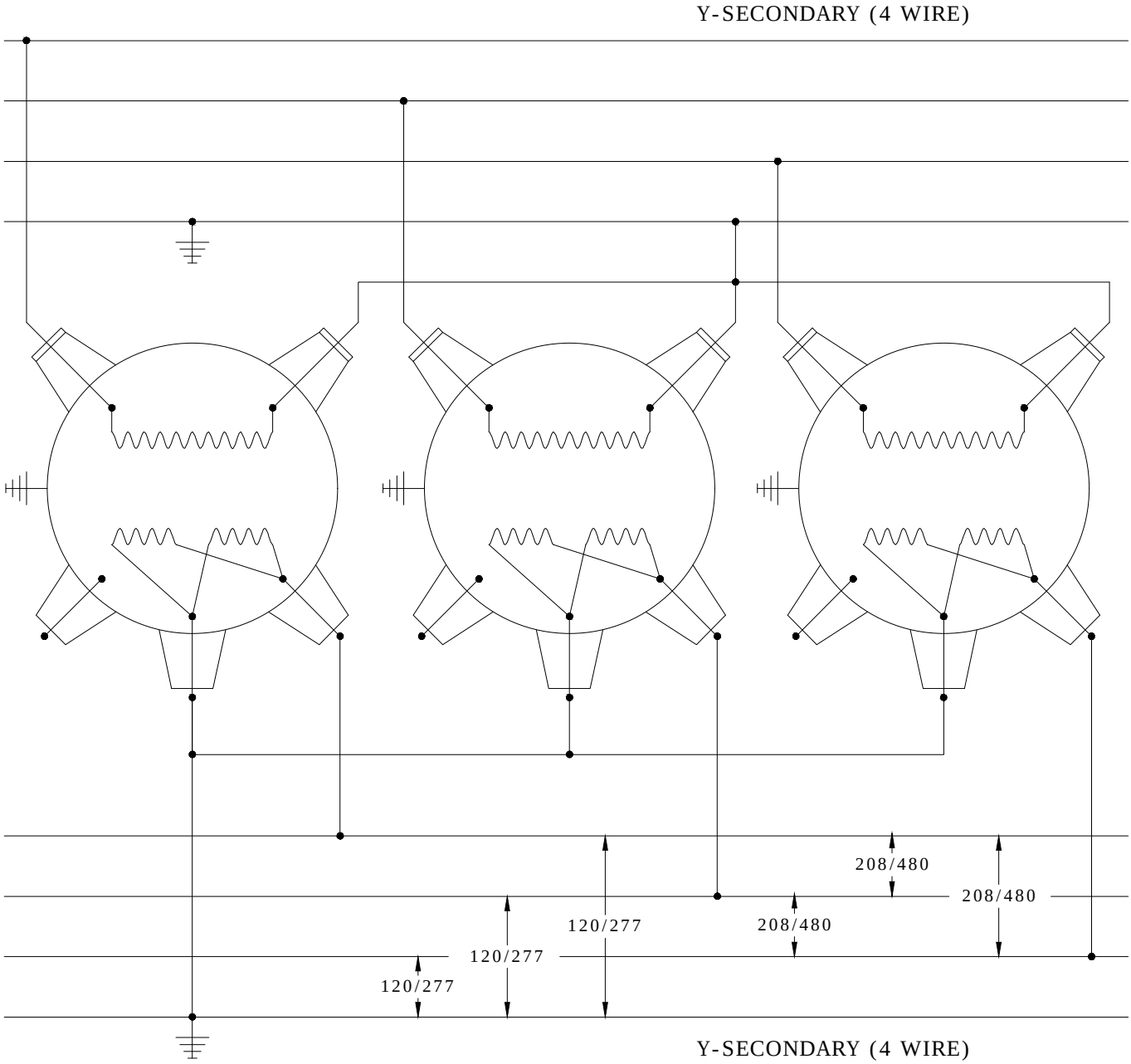

Notes:

1. Extend case ground wire to secondary bushing.
2. Use transformers with 277V secondary rating to obtain 277/480V.

Clark Public Utilities

CONSTRUCTION STANDARDS

3Ø WYE WYE
FOR 120/208 OR 277/480V SERVICE

REVISIONS			
R	DATE	ENGR	OPS
1	3/02		

1 REDRAWN IN CAD

PAGE:		CAD FILE:	APP: ELM	SECTION
1 of 1	TC7	TC7	DATE: 1/31/80	1100

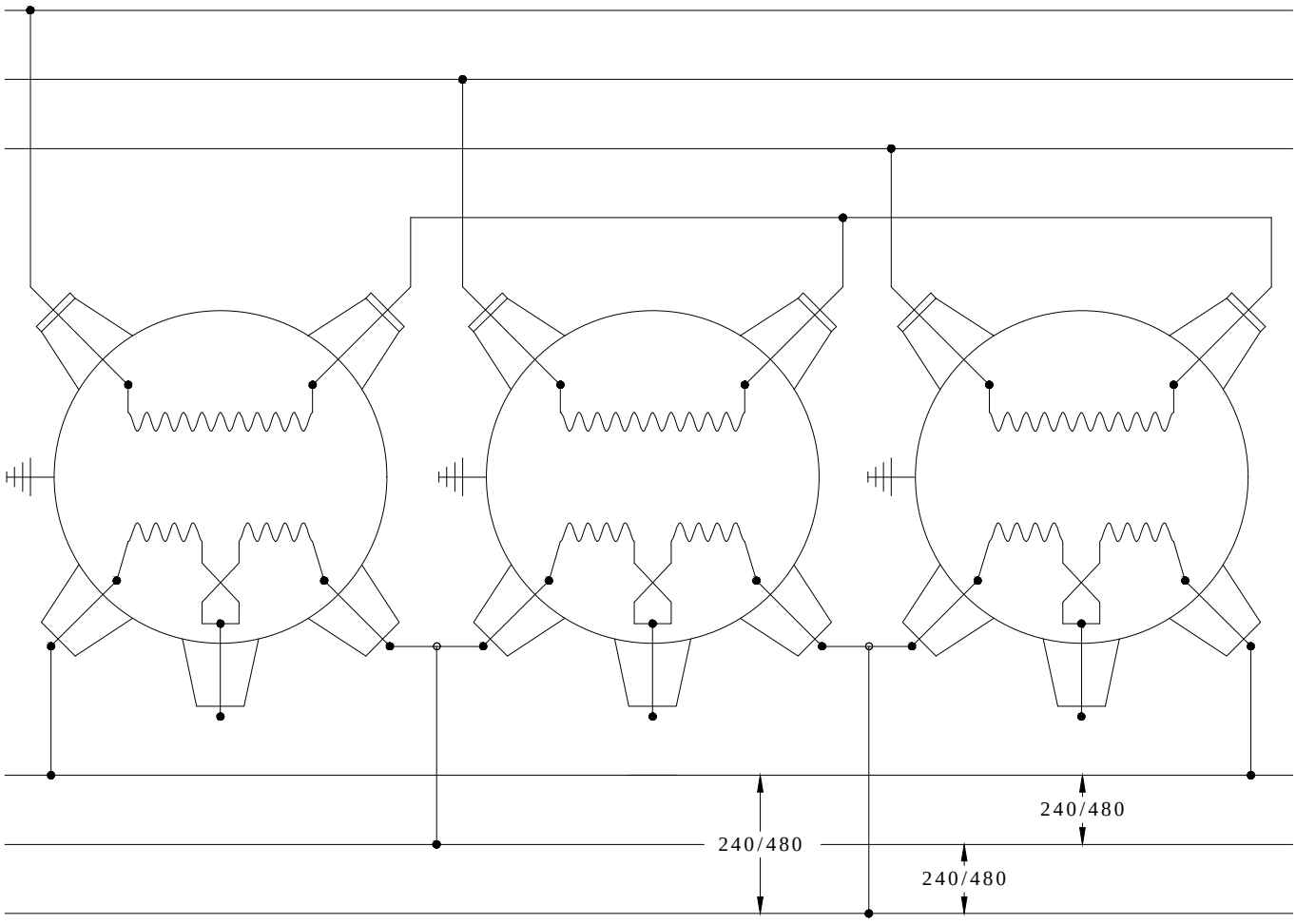

Notes:

1. Float primary neutral free to grounds
2. Use 2-bushing transformers only.

Clark Public Utilities

CONSTRUCTION STANDARDS

3Ø WYE DELTA
FOR 240V 3Ø 3-WIRE
480V 3Ø 3-WIRE

REVISIONS

R	DATE	ENGR	OPS
1	3/02		

1 REDRAWN IN CAD

PAGE: 1 of 1

TC8

CAD FILE: TC8

APP: ELM

DATE: 1/31/80

SECTION 1100

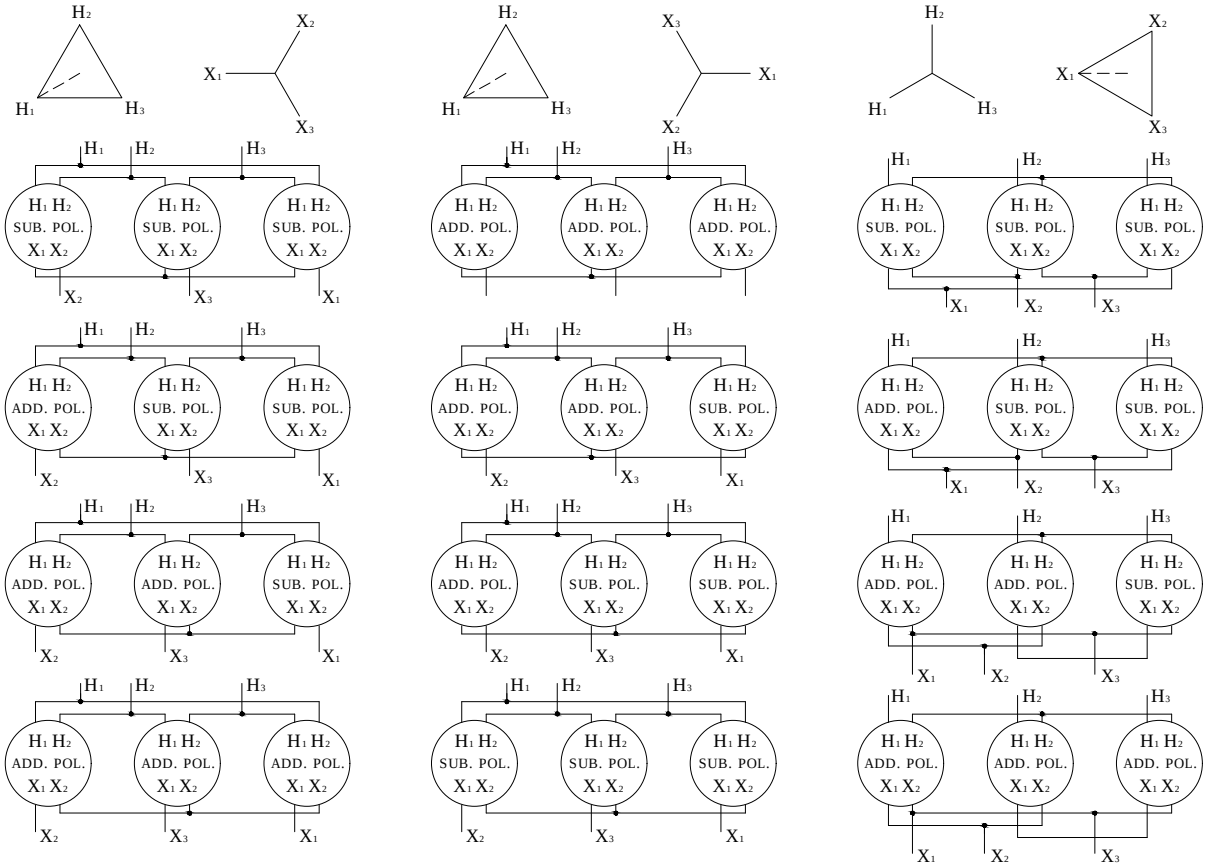

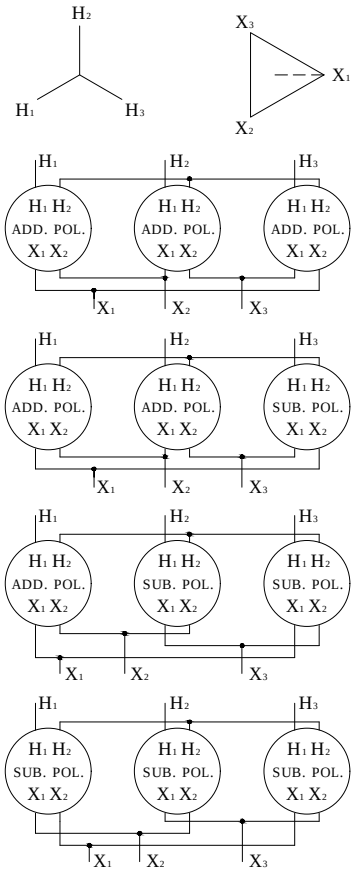

N.E.M.A STANDARDS FOR 1Ø TRANSFORMER POLARITY MARKING.

1. Additive polarity is standard for all 1Ø transformers in sizes 200KVA and below having high voltage ratings 8660 volts and below.

2. Subtractive polarity is standard for all other 1Ø transformers.

SUB. POL. = SUBTRACTIVE POLARITY
ADD. POL. = ADDITIVE POLARITY

Clark Public Utilities

CONSTRUCTION STANDARDS

3Ø TRANSFORMER CONNECTIONS

REVISIONS

R	DATE	ENGR	OPS
0	6/14/02		

0 REDRAWN IN CAD

PAGE:		CAD FILE:	APP: ELM	SECTION
1 of 1	TC10	TC10	DATE: 1/31/80	1100

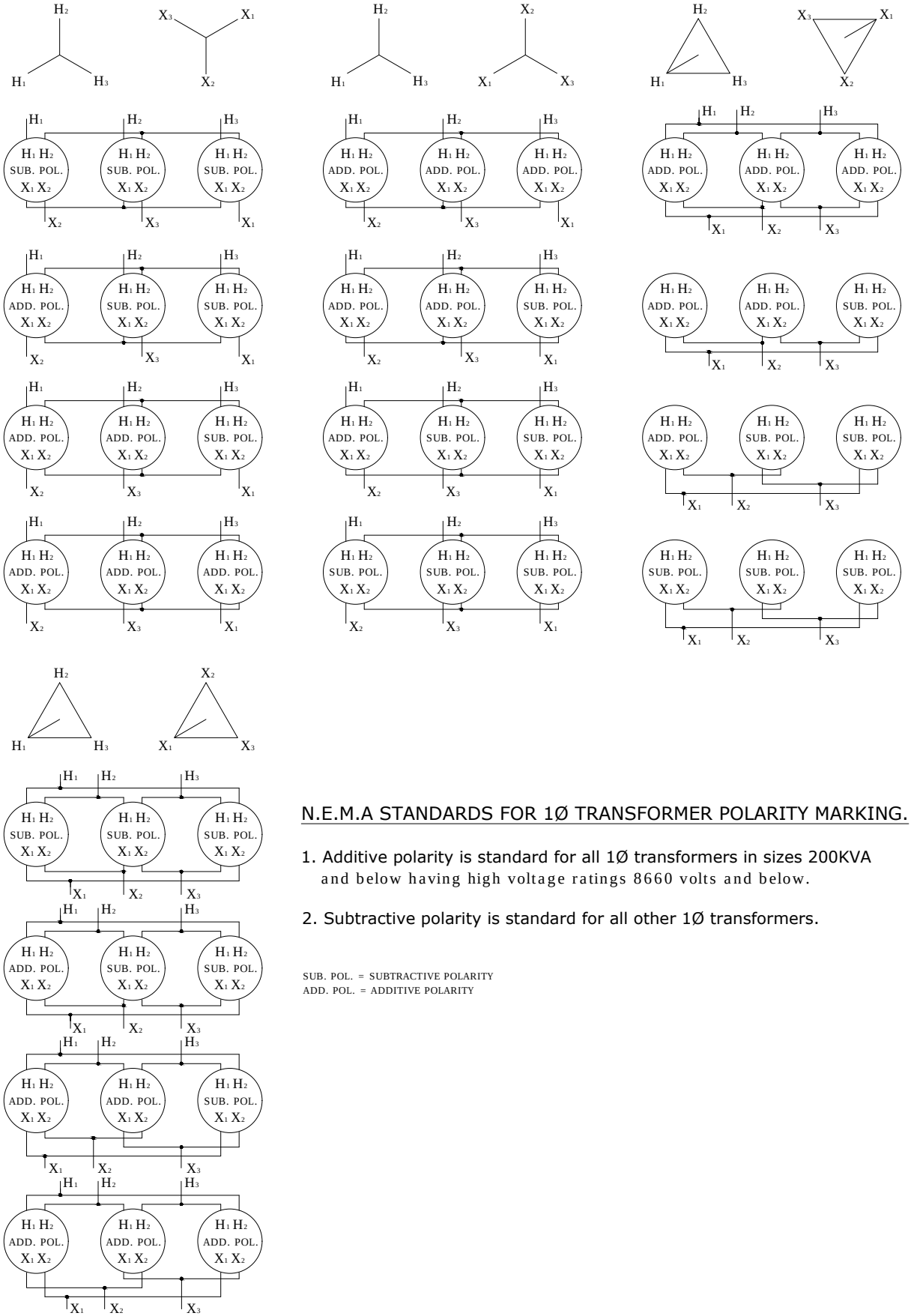

N.E.M.A STANDARDS FOR 1Ø TRANSFORMER POLARITY MARKING.

1. Additive polarity is standard for all 1Ø transformers in sizes 200KVA and below having high voltage ratings 8660 volts and below.

2. Subtractive polarity is standard for all other 1Ø transformers.

SUB. POL. = SUBTRACTIVE POLARITY
ADD. POL. = ADDITIVE POLARITY

Clark Public Utilities

CONSTRUCTION STANDARDS

3Ø TRANSFORMER CONNECTIONS

REVISIONS

R	DATE	ENGR	OPS
0	6/14/02		

0 REDRAWN IN CAD

PAGE:		CAD FILE:	APP: ELM	SECTION
1 of 1	TC11	TC11	DATE: 1/31/80	1100

TRANSFORMER SIZE KVA		MAX EYEBOLT SIZE	VOLTAGE CHART			
			120V	240V	277V	480V
1∅	3∅ (BANK)		120V 1∅ 120V/208V 3∅	120V/240V 1∅ 240V 3∅	277V/480V 3∅	480V 3∅
			COPPER WIRE SIZE			
15	45	4/O	2	2	2	2
25	75	350	2/O	2	2	2
37.5	112.5	350	4/O	2	2	2
50	150	350	350 ✲	2/O	2/O	2
75	225	SPADE	2-4/O	4/O	4/O	2/O
100	300	SPADE	2-350	350	350	2/O

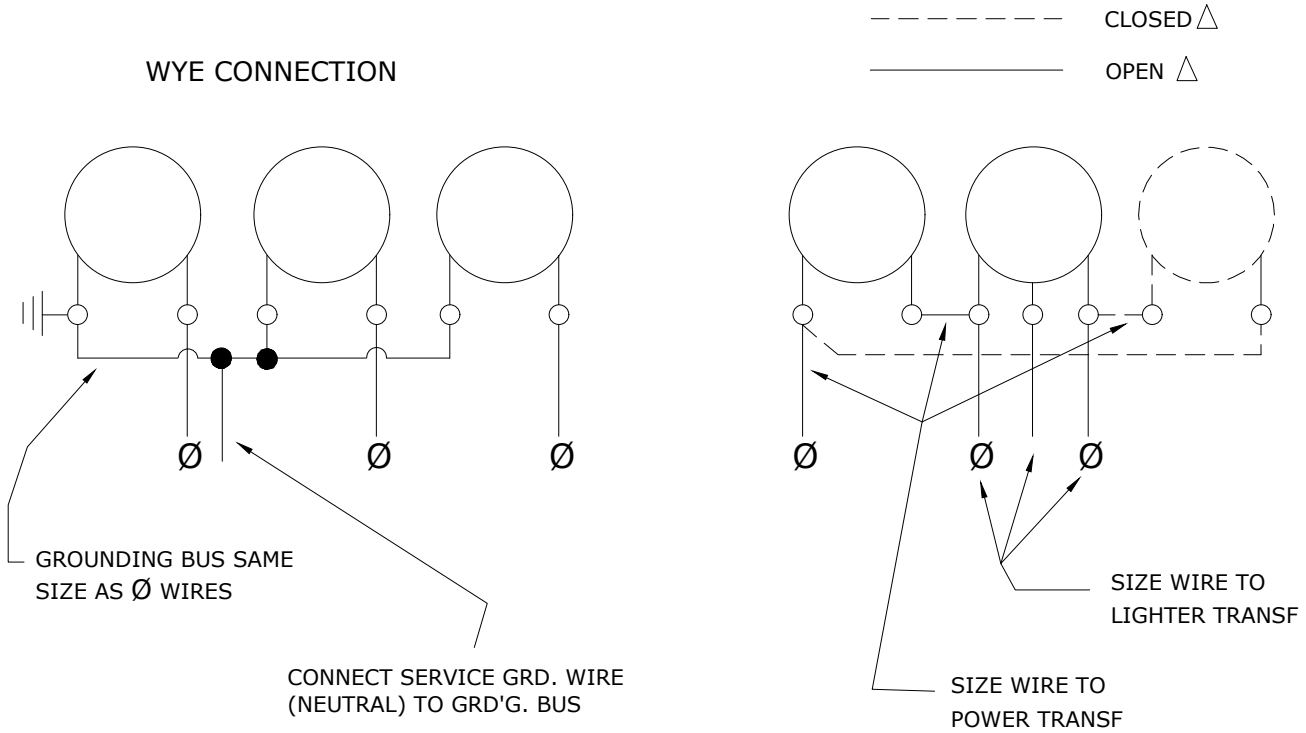

Notes:

1. Transformer loading based on 150% of Nameplate KVA.
2. Wire ampacity based on 90 degree Celsius (the maximum insulation temperature). Summer loading (Reference 02.06.01)
3. See Reference Section 2000, Standard 08.01 for larger bank sizes.
4. All high side jumpers #4 covered wire.

Rev 3 - Removed RED wire from note #4 and removed note #5.

Clark Public Utilities

CONSTRUCTION STANDARDS

TRANSFORMER LEAD SIZES
OVERHEAD SECONDARY

REVISIONS

R	DATE	ENGR	OPS
1	2/23/00	HWH	MA
2	12/14/09	KJP	
3	3/6/2023	CSB	

PAGE: 1 of 1

TL1

CAD FILE: TL1

APP: ELM
DATE: 1/31/80

SECTION 1100

480 VOLTS DELTA

3 PHASE BANK	500KVA	750KVA	1000KVA	1500KVA
COPPER WIRE SIZE PER BUSHING	1-350	2-4/0	2-350	3-350
BRAID SIZE	1-800 AMP	1-800 AMP	2-800 AMP	2-800 AMP

480 Y/277 GROUNDED WYE

COPPER WIRE SIZE PER BUSHING INCLUDING NEUTRAL	2-350	2-500	3-500	4-500
ALUMINUM WIRE SIZE PER BUSHING INCLUDING NEUTRAL	3-4/0	3-350	*	*

ALL BUSHING CONNECTIONS SHALL BE MADE WITH COPPER COMPRESSION SPADE TERMINALS. STOCK NUMBERS ARE:

4/0	#434
350	#436
500	#2276

CONNECT SERVICE CONDUCTORS TO TRANSFORMER SPADES WHERE EVER POSSIBLE. IF NOT, CONNECT SERVICE CONDUCTORS TO TRANSFORMER LEADS WITH COMPRESSION CONNECTORS. SEE SHEET 3 OF 3.

* USE COPPER LEADS AND CONNECT ALUMINUM SERVICE CONDUCTORS TO COPPER LEADS WITH COMPRESSION CONNECTORS.

LEAD SIZES ARE BASED UPON RATINGS IN IEEE S-135, PAGE 260.

R1 - CHANGE TO REFLECT OH JUMPERS

Clark Public Utilities

CONSTRUCTION STANDARDS

LARGE TRANSFORMER
LEAD SIZE - OVERHEAD

REVISIONS

R	DATE	ENGR	OPS
1	2/23/00	HWH	MA

1 REFLECT OH JUMPERS

PAGE: 1 of 3

TL2

CAD FILE: TL2

APP:

DATE: 4/92

SECTION 1100

240 VOLTS DELTA

3 PHASE BANK	500KVA	750KVA	1000KVA
COPPER WIRE SIZE PER BUSHING	2-350	3-350	3-500
BRAID SIZE	2-800 AMP	2-800 AMP	3-800 AMP

208 Y/120 VOLTS

COPPER WIRE SIZE PER BUSHING	3-500	(1) 4-750	(1) 5-750
BRAID SIZE	2-800 AMP	2-800 AMP	3-800 AMP

NOTES: (1) 750 COPPER REQUIRES BRONZE BOLT TYPE SPADE CONNECTORS SUCH AS SHOWN BELOW.

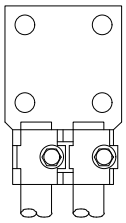

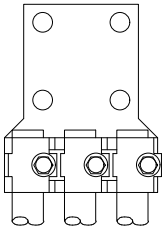

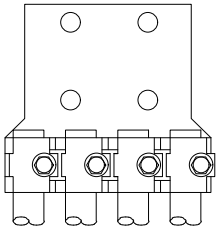

FARGO# 2J7A4N 3J7A4N 4J7A4N

Clark Public Utilities

CONSTRUCTION STANDARDS

LARGE TRANSFORMER
LEAD SIZE - OVERHEAD

REVISIONS

R	DATE	ENGR	OPS
1	2/23/00	HWH	MA

1 REFLECT OH JUMPERS

PAGE: 2 of 3

TL2

CAD FILE: TL2

APP:

DATE: 4/92

SECTION 1100

DELTA

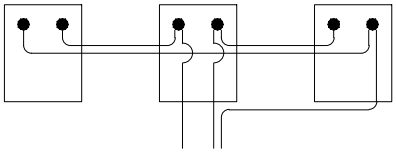

PREFERRED
(COPPER LEADS)
(COPPER OR ALUMINUM SERVICE)

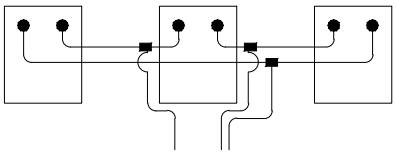

ALTERNATE
(COPPER LEADS)
(COPPER OR ALUMINUM SERVICE)

WYE

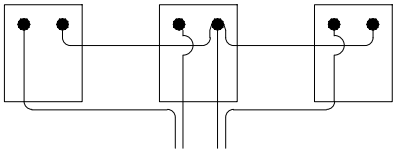

PREFERRED
(ALL ALUMINUM)

(1) COPPER

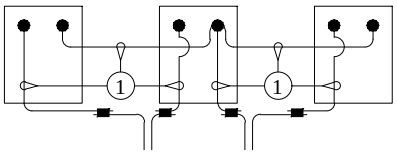

ALUMINUM OR COPPER
ALTERNATE

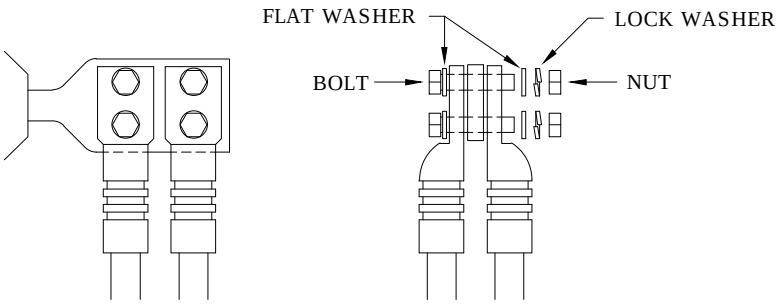

COMPRESSION CONNECTIONS
AT BUSHINGS

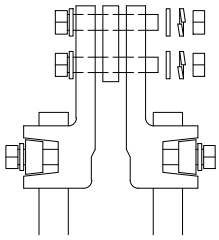

BRONZE BOLT TYPE
CONNECTIONS AT BUSHINGS

NOTES:
1. All Aluminum-to -Copper connections must be made so that water will run from the aluminum toward the copper.
2. Use oxide inhibitor at all connections.

Clark Public Utilities

CONSTRUCTION STANDARDS

LARGE TRANSFORMER
LEAD SIZE - OVERHEAD

REVISIONS

R	DATE	ENGR	OPS
1	2/23/00	HWH	MA

1 REFLECT OH JUMPERS

PAGE: 3 of 3

TL2

CAD FILE: TL2

APP:

DATE: 4/92

SECTION 1100

1150
CLEARANCES

2/11/2025

~	CFG	Construction Framing Guide
~	COR	OH Clearance to Roadways & Other Surfaces - NESC Minimum
C	CTS	OH Clearance to Structures
~	DC	OH Clearance to Roadways & Other Surfaces - Design Minimum
C	UPTC	Padmount Transformer Clearances

N New Standard
R Redrawn Standard
C Changed Standard
~ No Change

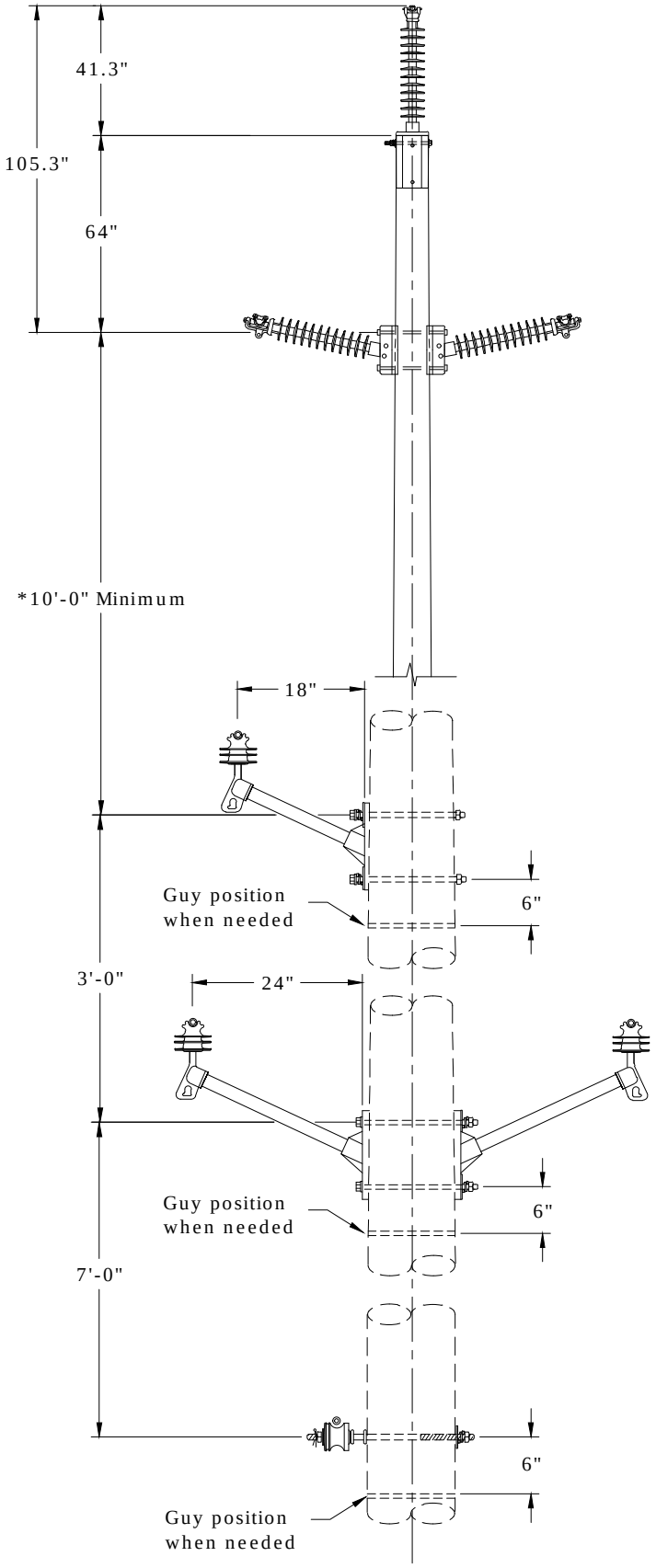

* For tall poles, make sure the distribution can be reached by a service/line truck.

Clark Public Utilities

CONSTRUCTION STANDARDS

CONSTRUCTION FRAMING GUIDE
TRANSMISSION UNDERBUILD

REVISIONS			
R	DATE	ENGR	OPS

PAGE:		CAD FILE:	APP: CM/AH	SECTION
1 of 6	CFG	CFG	DATE: 10/17/08	1150

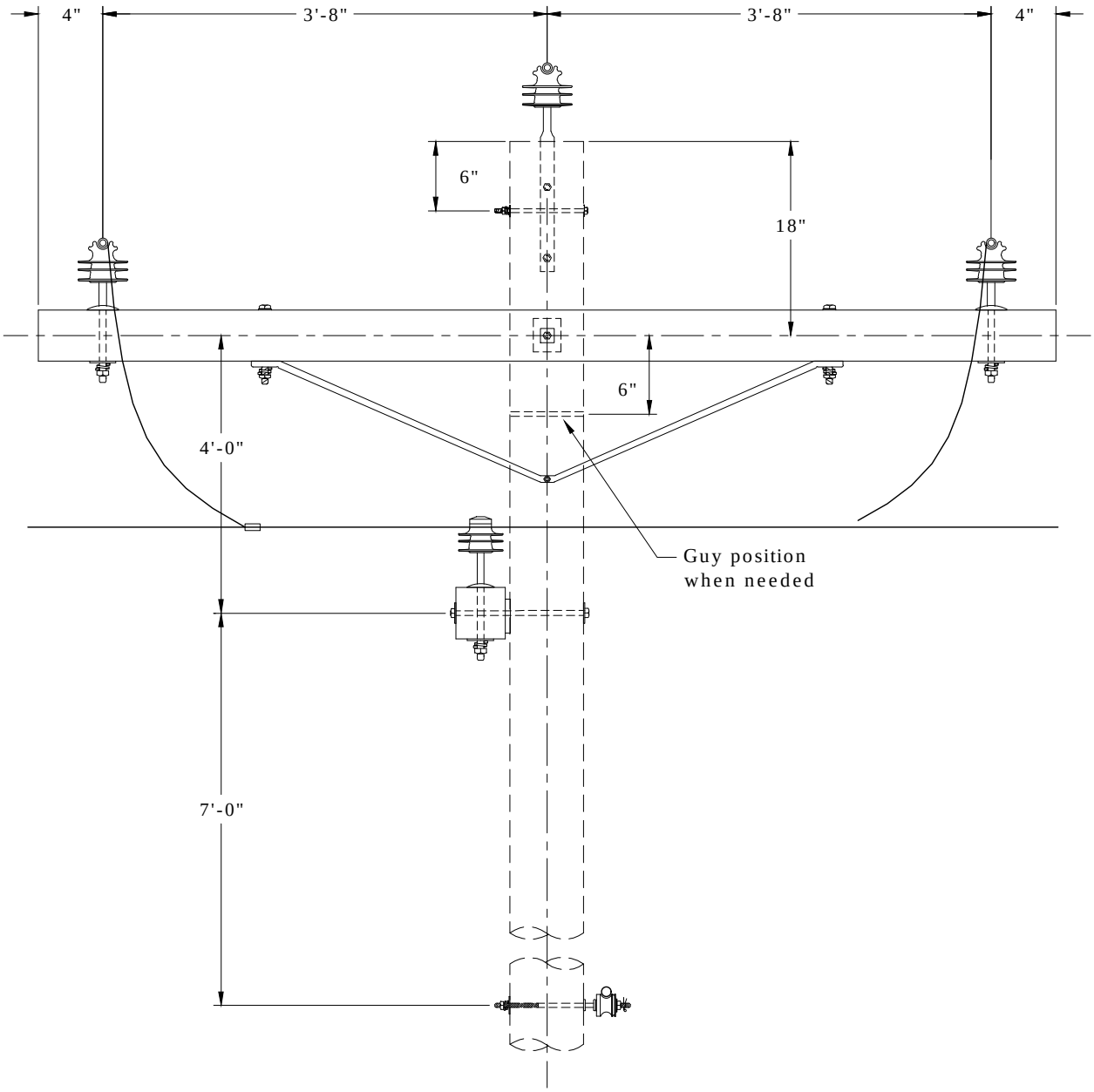

Clark Public Utilities

CONSTRUCTION STANDARDS

CONSTRUCTION FRAMING GUIDE
INTERSECTION

REVISIONS			
R	DATE	ENGR	OPS

PAGE:		CAD FILE:	APP: CM/AH	SECTION
2 of 6	CFG	CFG	DATE: 10/17/08	1150

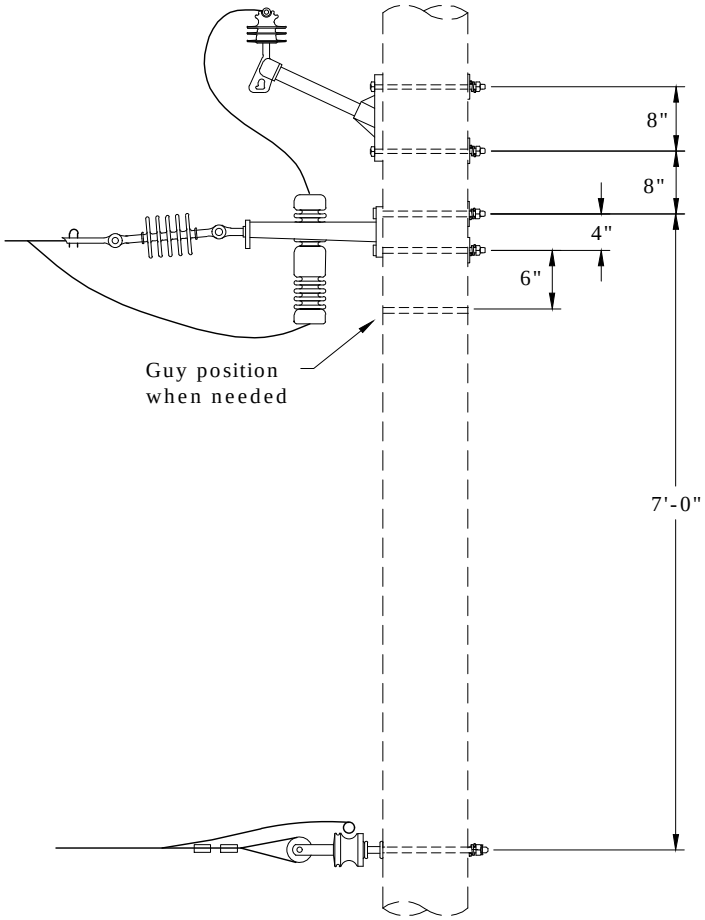

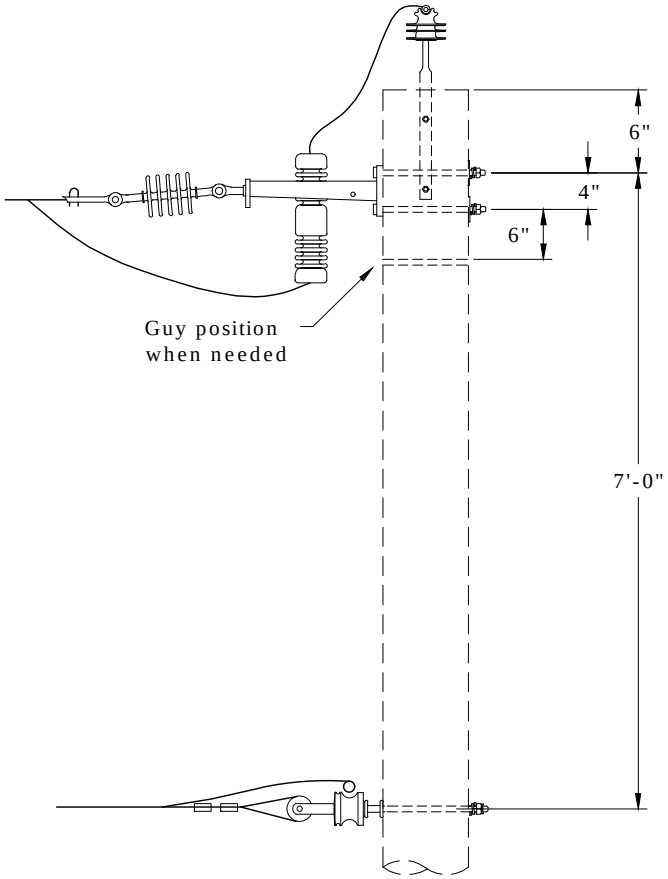

Alternate
for 1Ø

Clark Public Utilities

CONSTRUCTION STANDARDS

CONSTRUCTION FRAMING GUIDE
1Ø FUSED TAP

REVISIONS			
R	DATE	ENGR	OPS

PAGE:		CAD FILE:	APP: CM/AH	SECTION
3 of 6	CFG	CFG	DATE: 10/17/08	1150

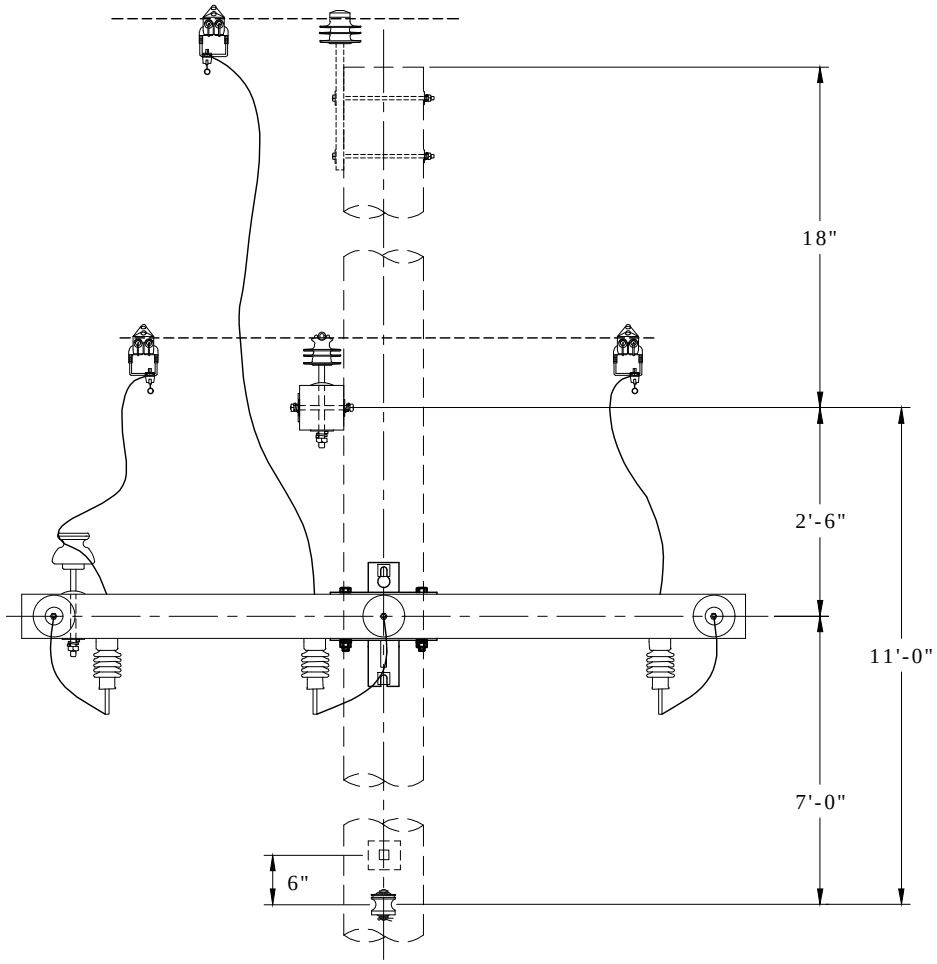

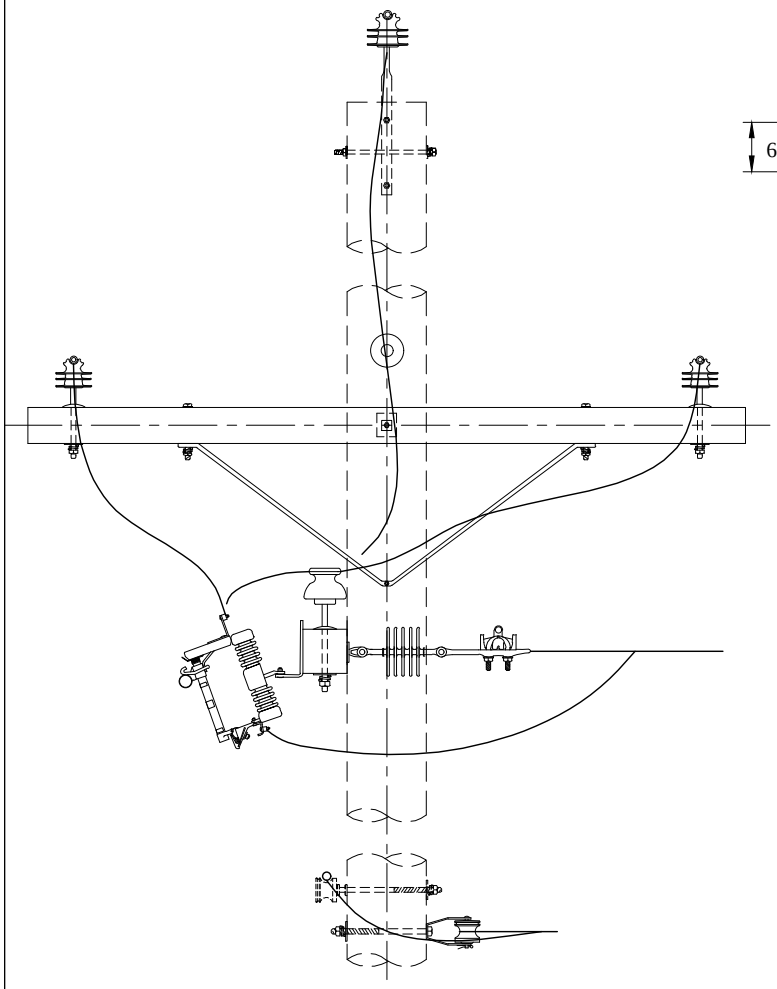

Clark Public Utilities

CONSTRUCTION STANDARDS

CONSTRUCTION FRAMING GUIDE
BUCKARM

REVISIONS

R	DATE	ENGR	OPS

PAGE: 4 of 6

CFG

CAD FILE: CFG

APP: CM/AH

DATE: 10/17/08

SECTION 1150

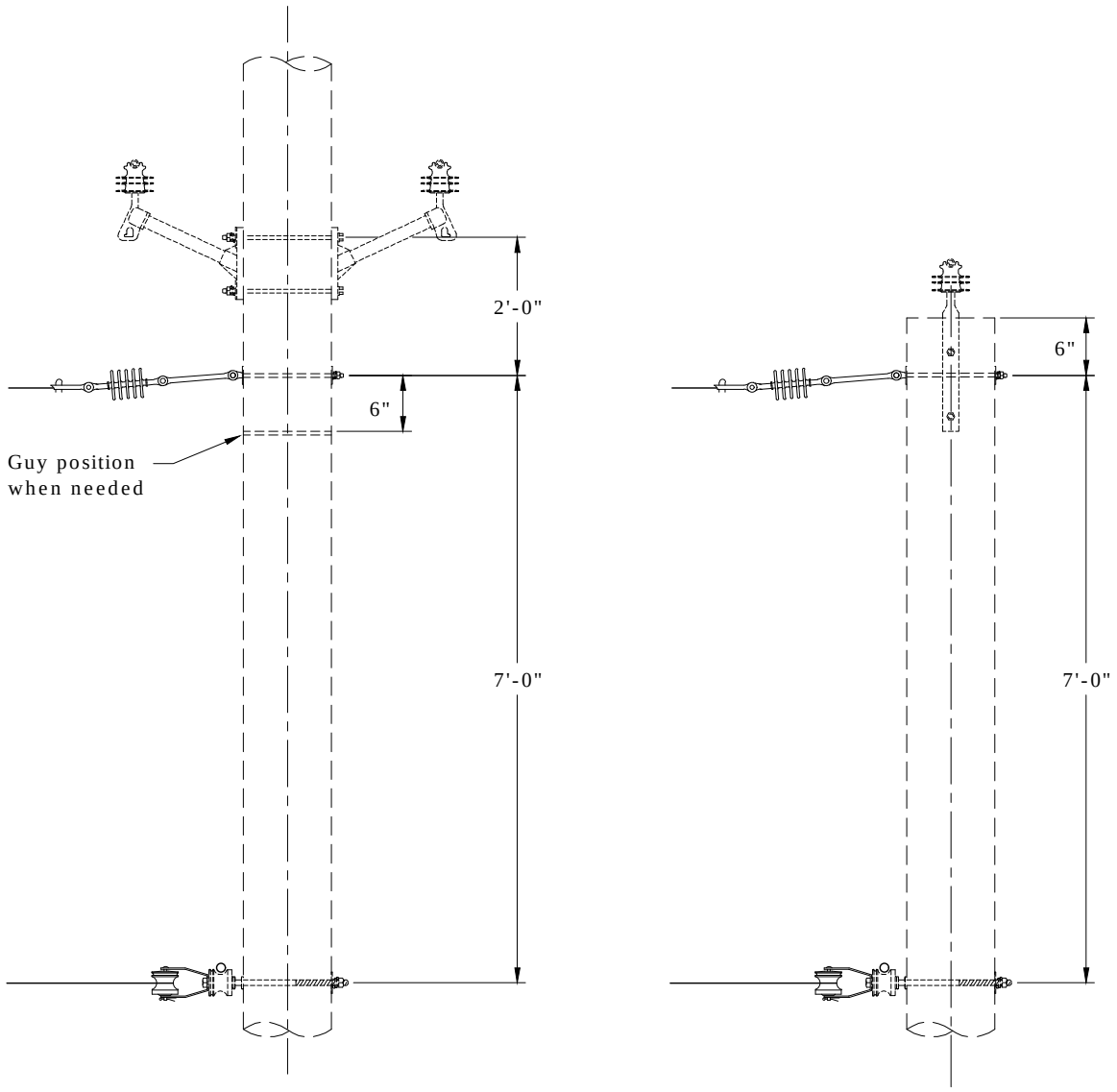

Alternate
for 1Ø

Clark Public Utilities

CONSTRUCTION STANDARDS

CONSTRUCTION FRAMING GUIDE
UNFUSED 1Ø TAP

REVISIONS			
R	DATE	ENGR	OPS

PAGE:		CAD FILE:	APP: CM/AH	SECTION
5 of 6	CFG	CFG	DATE: 10/17/08	1150

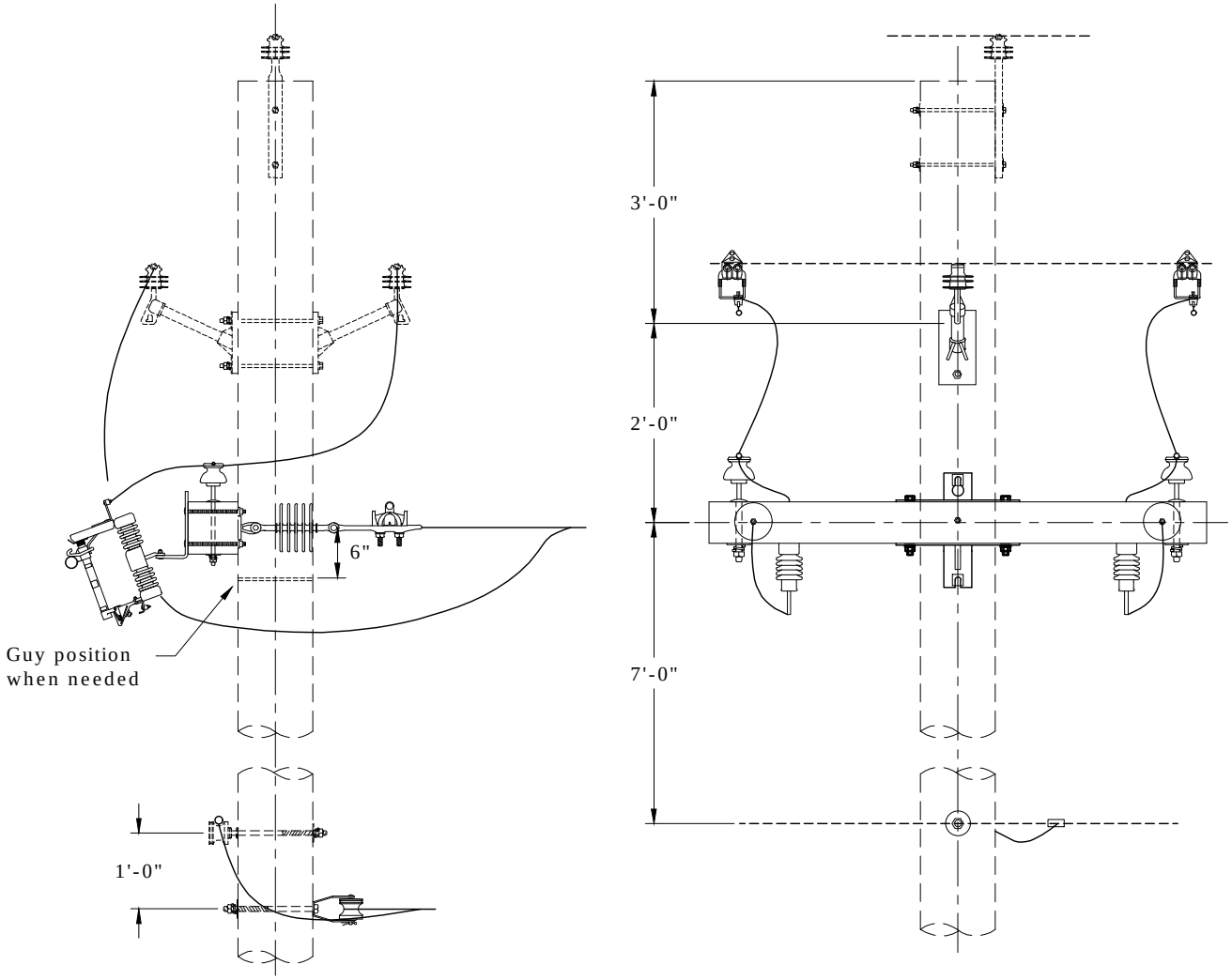

Clark Public Utilities

CONSTRUCTION STANDARDS

CONSTRUCTION FRAMING GUIDE
TWIGGY TO TAP ON CROSSARM

REVISIONS			
R	DATE	ENGR	OPS

PAGE:		CAD FILE:	APP: CM/AH	SECTION
6 of 6	CFG	CFG	DATE: 10/17/08	1150

2017 NESC Minimum Vertical Clearances

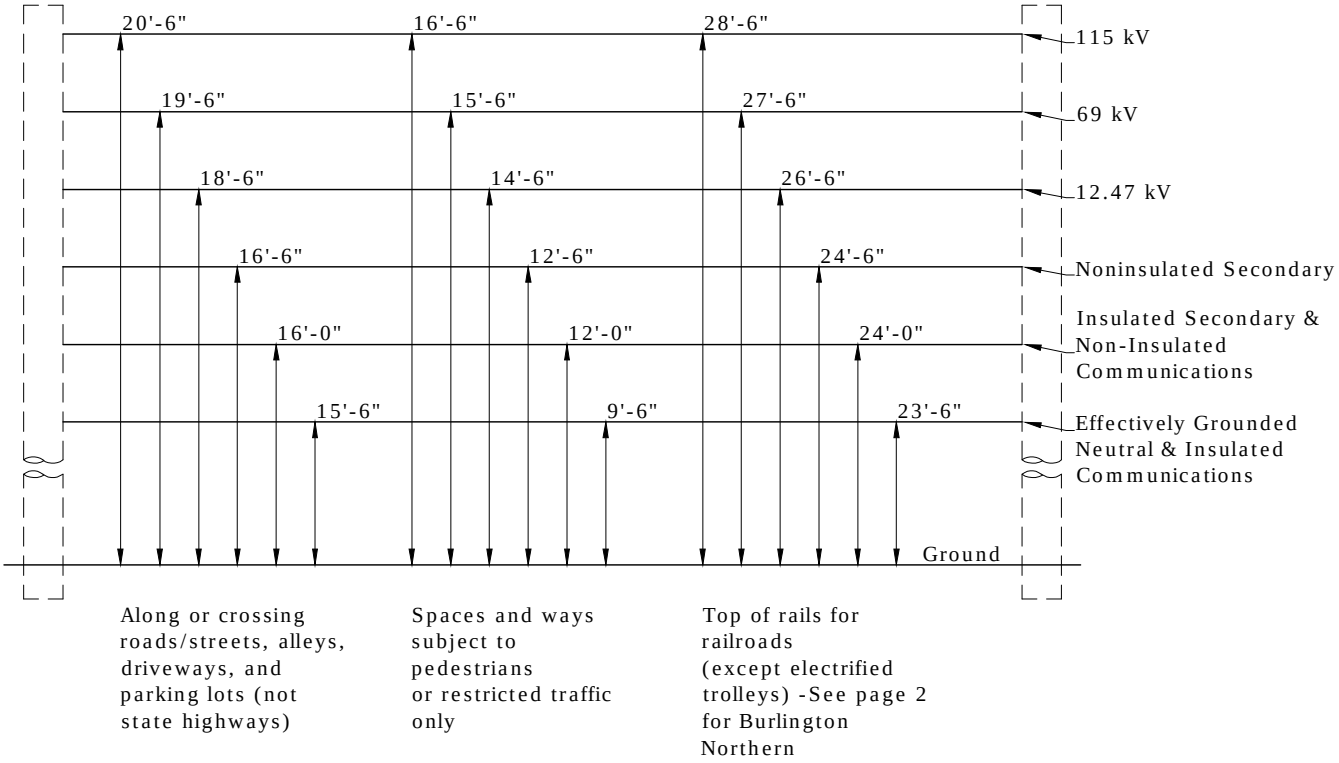

Washington State Highways		
Type of Utility Line	Lines Crossing Highway	Lines Parallel To Highway
Communications	24'	20'
Joint Usage Comm.	20'	20'
0-750 V	24'	24'
751-15,000 V	30'	27'
15,001-50,000 V	32'	32'
50,001 V And Over	34'	32'

Notes:

1. These minimum clearances must be met at maximum final sag.
2. See tables that follow for other surfaces and span guys.
3. Clearances per WAC 468-34-290 and NESC C2-2017 Rule 232.
4. See Std DC - Design Clearances - Section 1150 for new construction.

Clark Public Utilities

CONSTRUCTION STANDARDS

OVERHEAD CLEARANCE
TO ROADWAYS & OTHER SURFACES
NESC MINIMUM

REVISIONS			
R	DATE	ENGR	OPS

PAGE: 1 of 2

COR

CAD FILE: COR

APP: CM/DK

DATE: 11/10/16

SECTION 1150

2017 NESC MINIMUM VERTICAL CLEARANCES						
	CONDUCTORS					
	Neutral* & Insulated Communication	Insulated Secondary & Non-Insulated Communication	Non-Insulated Secondary	12.47 kV	69 kV	115 kV
	SPAN GUYS					
Nature of Surface Below	Span Guys for Poles Carrying 0 to 300 V		Span Guys for Poles Carrying 301 to 750 V	Span Guys for Poles Carrying 12.47 kV		
Roads, streets, alleys, parking lots & other areas subject to truck traffic (including horse trails, farmland, orchards, pastures & forests)	15’ 6”	16’ 0”	16’ 6”	18’ 6”	19’ 6”	20’ 6”
**Burlington Northern	24’ for Communication Lines 26’ 6” for Primary, Secondary, Neutrals & Span Guys				27’ 6”	28’ 6”
***Railroad tracks (except those using overhead trolley conductors)	23’ 6”	24’ 0”	24’ 6”	26’ 6”	27’ 6”	28’ 6”
Pedestrian ways where vehicles are prohibited by regulation or permanent obstructions and not reasonably expected to be used by vehicles	9’ 6”	12’ 0”	12’ 6”	14’ 6”	15’ 6”	16’ 6”
Water areas not suitable for sailboating or where sailboating is prohibited	14’ 0”	14’ 6”	15’ 0”	17’ 0”	18’ 0”	19’ 0”
Water suitable for sailboating	See Standards Engineering					

* This column is for an effectively grounded neutral only. All other neutrals are the same as the phase conductors of the circuit with which they are associated.
** Measured from top of rails to conductor/guy.
*** The railroad company may require more clearance than shown here.

Clark Public Utilities

CONSTRUCTION STANDARDS

OVERHEAD CLEARANCE
TO ROADWAYS & OTHER SURFACES
NESC MINIMUM

REVISIONS			
R	DATE	ENGR	OPS

PAGE: 2 of 2

COR

CAD FILE: COR

APP: CM/DK
DATE: 11/10/16

SECTION 1150

Scope

This standard lists the **MINIMUM** conductor clearances between conductors and structures such as buildings, signs, and flag poles. These clearances are taken from the 2017 edition of NESC Rule 234.

Notes:

1. The preferred design clearance to structures is 10 feet, if possible, in recognition of WAC 296-24-960 Unqualified Worker minimum clearance of 10 feet to any conductors (including the neutral) up to 50kV. There will be installations where it is not possible to obtain 10 feet of clearance. In those cases the 2017 NESC Rule 234 minimum clearances shall be met.
2. The clearances in these tables are the absolute minimums required by code. The values are based on worst-case conductor loading, conductor tension, and wind loading.
3. Ungrounded guys and ungrounded portions of guys between guy insulators shall have clearances based on the highest voltage to which they may be exposed to a slack conductor or guy.

Table 1 - Horizontal clearances to walls, projections, windows, balconies, and areas accessible to pedestrians.

Conductor	NESC Minimum Horizontal Clearance (feet)
Neutrals, grounded guys, ungrounded guys exposed to 0 to 300V	4'6"
Services (0 to 750V multiplex), (does not include building being served)	5'0"
Unguarded rigid live parts & equipment cases (0 to 750V), ungrounded guys (300 to 750V)	5'0"
Ungrounded guys exposed to 750V to 22kV	7'0"
Primary (7.2/12.5kV)	7'6"
69kV	8'6"
115kV	9'6"

Table 2 - Horizontal clearances to signs, chimneys, billboards, radio and TV antennas, and tanks readily accessible to pedestrians.

Conductor	NESC Minimum Horizontal Clearance (feet)
Neutrals, grounded guys, ungrounded guys exposed to 0 to 300V	4'6"
Services (0 to 750V multiplex)	5'0"
Unguarded rigid live parts & equipment cases (0 to 750V), ungrounded guys (300 to 750V)	5'0"
Ungrounded guys exposed to 750V to 22kV	7'0"
Primary (7.2/12.5kV)	7'6"
69kV	8'6"
115kV	9'6"

Rev. 3 - Updated for 2023 NESC.

Table 3 - Horizontal clearances to signs, chimneys, billboards, radio and TV antennas, and tanks **not** readily accessible to pedestrians.

Conductor	NESC Minimum Horizontal Clearance (feet)
Neutrals, grounded guys, ungrounded guys exposed to 0 to 300V	3'0"
Services (0 to 750V multiplex)	3'6"
Unguarded rigid live parts & equipment cases (0 to 750V), ungrounded guys (300 to 750V)	5'0"
Ungrounded guys exposed to 750V to 22kV	7'0"
Primary (7.2/12.5kV)	7'6"
69kV	8'6"
115kV	9'6"

Table 4 - Vertical clearances over or under building roofs or projections readily accessible to pedestrians.

Conductor	NESC Minimum Vertical Clearance (feet)
Neutrals, grounded guys, ungrounded guys exposed to 0 to 300V	9'6" ✡
Services (0 to 750V multiplex), (does not include building being served)	10'0" ✡
Unguarded rigid live parts & equipment cases (0 to 750V), ungrounded guys (300 to 750V)	10'0" ✡
Ungrounded guys exposed to 750V to 22kV	14'0" ✡
Primary (7.2/12.5kV)	14'6" ✡
69kV	15'6" ✡
115kV	16'6" ✡

Table 5 - Vertical clearances over or under building roofs or projections **not** readily accessible to pedestrians

Conductor	NESC Minimum Vertical Clearance (feet)
Neutrals, grounded guys, ungrounded guys exposed to 0 to 300V	3'0"
Services (0 to 750V multiplex), (does not include building being served)	3'6"
Unguarded rigid live parts & equipment cases (0 to 750V), ungrounded guys (300 to 750V)	10'0"
Ungrounded guys exposed to 750V to 22kV	12'0"
Primary (7.2/12.5kV)	12'6"
69kV	13'6"
115kV	14'6"

Rev. 3 - Updated for 2023 NESC.

Table 6 - Vertical clearances over roofs that are accessible to vehicles less than 8 feet high.

Conductor	NESC Minimum Vertical Clearance (feet)
Neutrals, grounded guys, ungrounded guys exposed to 0 to 300V	9'6" ✲
Services (0 to 750V multiplex)	10'0" ✲
Unguarded rigid live parts & equipment cases (0 to 750V), ungrounded guys (300 to 750V)	10'0" ✲
Ungrounded guys exposed to 750V to 22kV	14'0" ✲
Primary (7.2/12.5kV)	14'6" ✲
69kV	15'6" ✲
115kV	16'6" ✲

Table 7 - Vertical clearances over roofs accessible to truck traffic (vehicles over 8 feet high).

Conductor	NESC Minimum Vertical Clearance (feet)
Neutrals, grounded guys, ungrounded guys exposed to 0 to 300V	15'6"
Services (0 to 750V multiplex)	16'0"
Unguarded rigid live parts & equipment cases (0 to 750V), ungrounded guys (300 to 750V)	16'0"
Ungrounded guys exposed to 750V to 22kV	18'0"
Primary (7.2/12.5kV)	18'6"
69kV	19'6"
115kV	20'6"

Table 8 - Vertical clearances over and under signs, chimneys, billboards, radio and TV antennas, tanks, and other installations not classified as buildings or bridges where the conductor is over or under catwalks and other surfaces where personnel walk.

Conductor	NESC Minimum Vertical Clearance (feet)
Neutrals, grounded guys, ungrounded guys exposed to 0 to 300V	9'6" ✲
Services (0 to 750V multiplex)	10'0" ✲
Unguarded rigid live parts & equipment cases (0 to 750V), ungrounded guys (300 to 750V)	10'0" ✲
Ungrounded guys exposed to 750V to 22kV	14'0" ✲
Primary (7.2/12.5kV)	14'6" ✲
69kV	15'6" ✲
115kV	16'6" ✲

Rev. 3 - Updated for 2023 NESC.

Table 9 - Vertical clearances over and under signs, chimneys, billboards, radio and TV antennas, tanks, and other installations not classified as buildings or bridges where the conductor is over or under portions of such installations where personnel do **not** walk.

Conductor	NESC Minimum Vertical Clearance (feet)
Neutrals, grounded guys, ungrounded guys exposed to 0 to 300V	3'0"
Services (0 to 750V multiplex)	3'6"
Unguarded rigid live parts & equipment cases (0 to 750V), ungrounded guys (300 to 750V)	5'6"
Ungrounded guys exposed to 750V to 22kV	7'6"
Primary (7.2/12.5kV)	8'0"
69kV	9'0"
115kV	10'0"

Rev. 3 - Updated for 2023 NESC.

Table 10 - Vetical clearance of service drop conductors, including drip loops, for the building it is serving (see figure 1).

Conductor	NESC Minimum Vertical Clearance (feet)
Multiplex that does not exceed 750V within 6' radius of service mast which is located no more than 4' from the edge of the roof	1'6"
Multiplex that does not exceed 750V outside 6' radius of service mast	3'0"

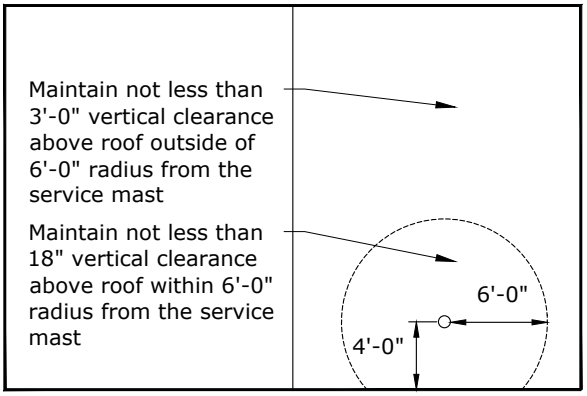

Plan View of Roof

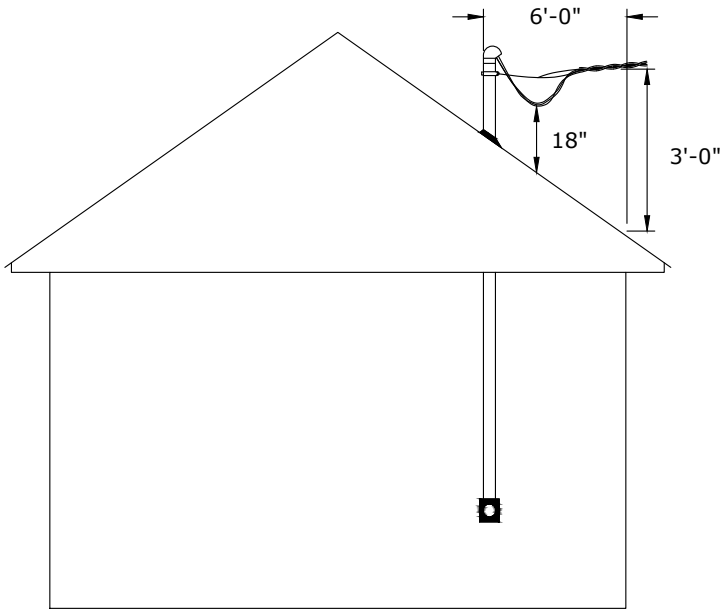

Elevation View

Figure 1- Clearances of service drop terminating on support mast

Rev. 3 - Updated for 2023 NESC.

Clark Public Utilities

CONSTRUCTION STANDARDS

OVERHEAD CLEARANCE TO STRUCTURES

REVISIONS

R	DATE	ENGR	OPS
1	10/17/08	CM	AH
2	9/5/16	KJP	
3	2/11/25	CM	GM

PAGE: 5 of 5

CTS

CAD FILE: CTS

APP: LB/AH

DATE: 3/17/04

SECTION 1150

Design Minimum Vertical Clearances

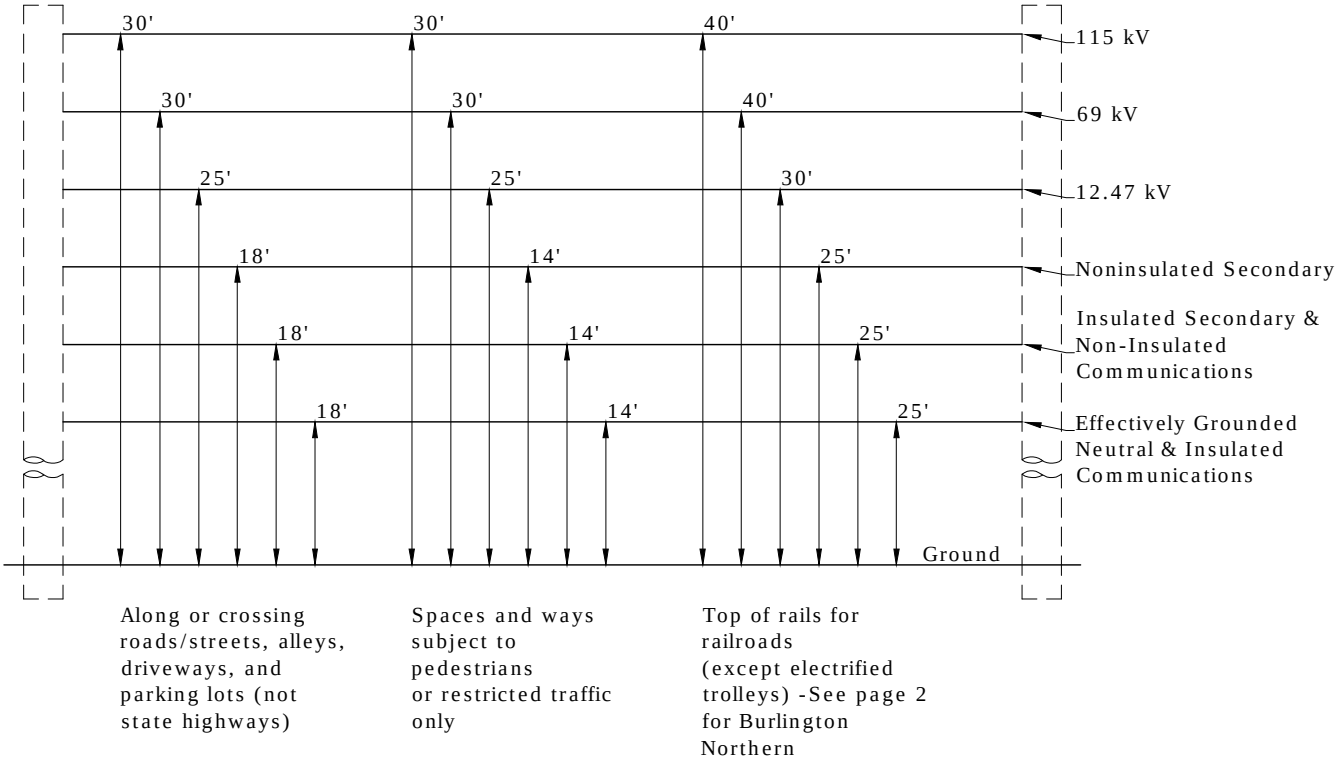

Washington State Highways		
Type of Utility Line	Lines Crossing Highway	Lines Parallel To Highway
Communications	25'	21'
Joint Usage Comm.	21'	21'
0-750 V	25'	25'
751-15,000 V	35'	35'
15,001-50,000 V	35'	35'
50,001 V And Over	40'	40'

Notes:

1. See tables that follow for other surfaces and span guys.
2. See Std COR - Overhead Clearance to Roadways and Other Surfaces - Section 1150 for NESC minimums.
3. Proposed exceptions to these clearances require approval from CPU Engineering.

Clark Public Utilities

CONSTRUCTION STANDARDS

OVERHEAD CLEARANCE
TO ROADWAYS & OTHER SURFACES
DESIGN MINIMUM - NEW CONSTRUCTION

REVISIONS			
R	DATE	ENGR	OPS

PAGE: 1 of 2

DC

CAD FILE: DC

APP: CM/DK

DATE: 11/10/16

SECTION 1150

DESIGN MINIMUM VERTICAL CLEARANCES						
	CONDUCTORS					
	Neutral* & Insulated Communication	Insulated Secondary & Noninsulated Communication	Noninsulated Secondary	12.47kV	69kV	115kV
	SPAN GUYS					
Nature of surface below	Span Guys for Poles carrying 0 to 300v		Span Guys for Poles carrying 310 to 750v	Span Guys for Poles carrying 12.47kV		
Roads, Streets, Alleys, Parking Lots & Other Areas Subject to Truck Traffic (including horse trails, farmland, orchards, pastures & forests)	18’	18’	18’	25’	30’	30’
Burlington Northern	25’ for Communication Lines 35’ for All Electric Lines, Neutrals & Span Guys				40’	40’
Railroad tracks (except those using overhead trolley conductors)	25’	25’	25’	30’	40’	40’
Pedestrian ways where vehicles are prohibited by regulation or permanent obstructions and not reasonably expected to be used by vehicles or horseback riding	14’	14’	14’	25’	30’	30’
Water areas not suitable for sailboating or where sailboating is prohibited	18’	18’	18’	25’	30’	30’

* This column is for an effectively grounded neutral only. All other neutrals are the same as the phase conductors of the circuit with which they are associated.

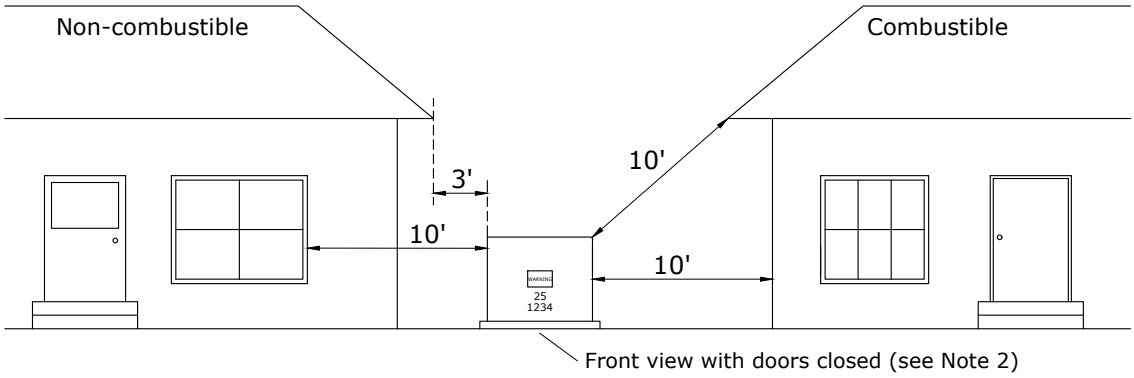

MINIMUM DISTANCE REQUIRED FROM STRUCTURES TO PADMOUNTED TRANSFORMERS

- 10 ft. to any windows, doors, stairways, or openings on all structures.
- 3 ft. clear area in back and sides of unit to allow working on equipment.
- 10 ft. from any structure or roof overhang consisting of combustible material.
- 3 ft. to non-combustible structures having no openings closer than 10 ft.
- Proposed exceptions to these clearances require approval from CPU Engineering.
- Must maintain 3' clearance from CPU equipment and Communication equipment.

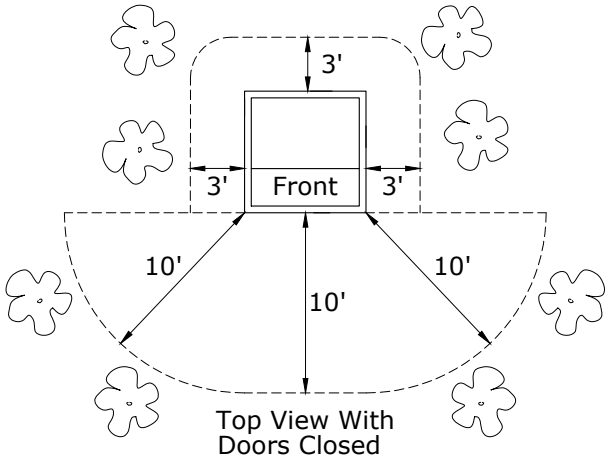

MINIMUM WORKING CLEARANCE REQUIRED

10 ft. clear area in front of unit to allow use of 8' hot sticks (see Note 2).

Notes:

1. Customer must provide documentation for non-combustible.
2. Locate front of padmounted transformer away from building walls or other barriers to allow for safe working practices. Doors of enclosures and transformers must face towards the driving access unless otherwise approved. No vegetation in this work space is permitted.
3. Consult CPU Residential Electric Service Handbook for any additional required clearances to building doors, windows, fire escapes, air vents, etc.
4. Where exposed to motorized vehicles (less than 5 feet from a drivable surface), the customer must install and maintain CPU approved barrier to protect padmounted transformer and other equipment. See CPU Std UTP9.
5. Locate transformers no less than 5 feet and no more than 10 feet from a maintained drivable surface unless otherwise approved by CPU.
6. All distances shall also apply to tree trunks and major root systems.

Rev. 3 - Added bullet point for 3' clearance from CPU equipment to comms.

Clark Public Utilities

CONSTRUCTION STANDARDS

PADMOUNT TRANSFORMER CLEARANCES

REVISIONS

R	DATE	ENGR	OPS
0	2/22/00	HWH	MA
1	5/30/07	LB	AH
2	11/10/16	CM	DK
3	2/11/25	CM	GM

PAGE: 1 of 1

UPTC

CAD FILE: UPTC

APP: JEH

DATE: 2/22/00

SECTION 1150

1200
UNDERGROUND GENERAL AND TRENCHING

2/11/2025

C	UA1	Basic Trench Requirements
~	UC1	Conduit Requirements
~	UD1	Directional Boring Specifications
~	UVE1	Underground Vault 120 V Wiring
~	UVSP1	Underground Vault - Sump Pump

N New Standard
R Redrawn Standard
C Changed Standard
~ No Change

The trench configurations below are shown with 1ø primary. Conduits for 2ø primary cable should lay side-by-side. Conduits for 3ø primary cable should be tie-wrapped to form an equilateral triangle (see Detail A).

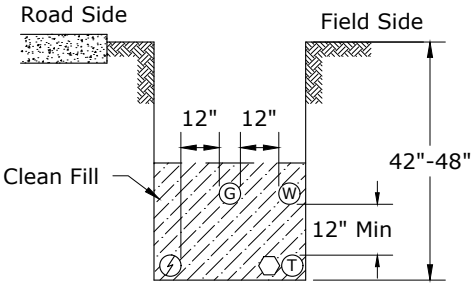

1ø Trench With Gas & Water

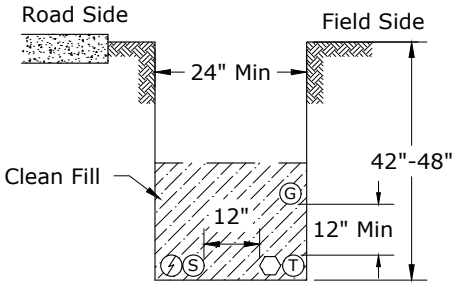

1ø and Secondary Trench With Gas

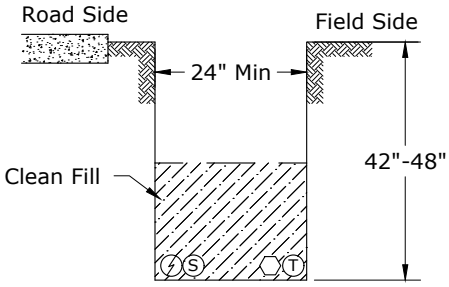

1ø and Secondary Trench Without Gas

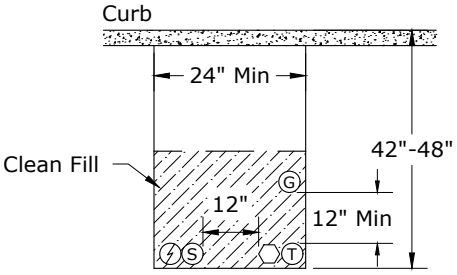

1ø and Secondary Street Crossing

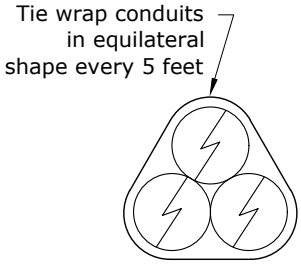

DETAIL A
Additional Requirements for 3ø Trenches

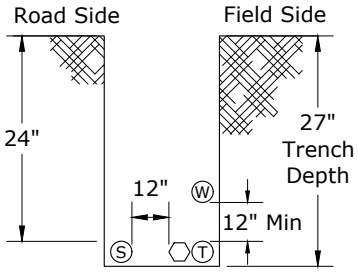

Secondary & Communications

Notes:

1. All primary and secondary power cables are in conduit.
2. Select backfill or controlled density fill (CDF) may be required.
3. Construction scrap material or trash of any kind is not allowed in any part of the trench.

Legend:

- Ⓢ Primary Power
- Ⓣ Telephone
- Ⓖ Gas
- Ⓢ Secondary Power
- ⬡ TV Cable
- Ⓦ Water Service Only
- Ⓕ CPU Fiber (2" conduit)

Rev. 6 - Updated secondary trench depths.

Clark Public Utilities

CONSTRUCTION STANDARDS

BASIC TRENCH REQUIREMENTS

REVISIONS

R	DATE	ENGR	OPS
3	5/30/07	LB	AH
4	12/14/09	KJP	
5	8/22/19	CM	GM
6	2/11/25	CM	GM

PAGE:		CAD FILE:	APP: HWH/GW	SECTION
1 of 2	UA1	UA1	DATE: 1/22/80	1200

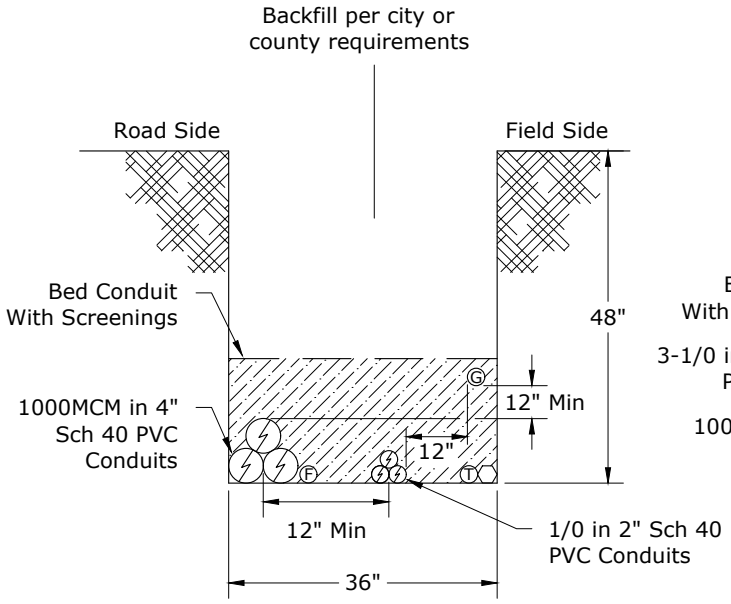

1000MCM With 1/0 Trench

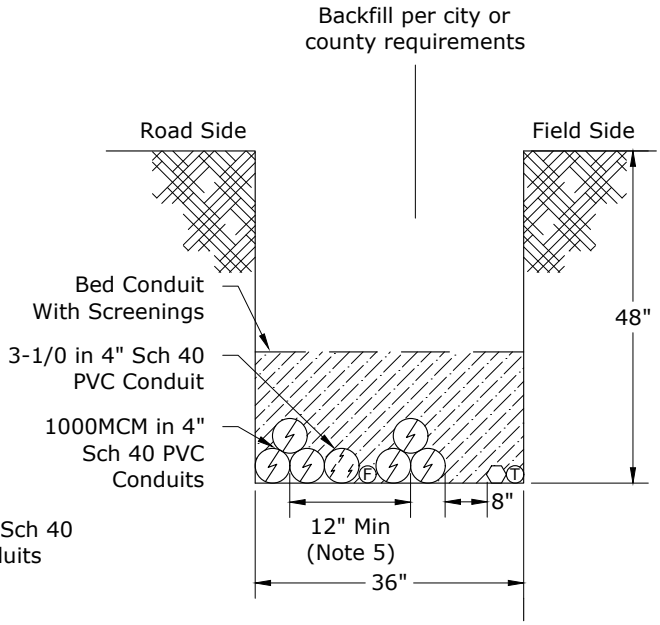

2-1000MCM With 3ø-1/0 Trench

Note: 3Ø conduits (4" and 2") are to be tie wrapped in a triangular configuration every 5 feet. See Detail A on page 1.

Notes:

1. All primary and secondary power cables are in conduit.
2. Select backfill or controlled density fill (CDF) may be required.
3. Construction scrap material or trash of any kind is not allowed in any part of the trench.
4. Caution tape is required one foot above the top 1000 MCM conduit (on screenings).
5. 12-inch minimum horizontal separation applies to both parallel feeders and to different feeders.

Legend:

- Ⓕ Primary Power
- Ⓣ Telephone
- Ⓖ Gas
- Ⓢ Secondary Power
- ⬡ TV Cable
- Ⓦ Water Service Only
- Ⓕ CPU Fiber (2" conduit)

Rev. 7 - Updated trench width.

Clark Public Utilities

CONSTRUCTION STANDARDS

BASIC TRENCH REQUIREMENTS

REVISIONS

R	DATE	ENGR	OPS
4	12/14/09	KJP	
5	8/22/19	CM	GM
6	5/19/21	KJP	
7	2/11/25	CM	GM

PAGE: 2 of 2

UA1

CAD FILE: UA1

APP: HWH/GW

DATE: 1/22/80

SECTION 1200

ALL CONDUIT SHALL BE GRAY ELECTRICAL CONDUIT AND SHALL BE UL LISTED AND NEMA TC-2 OR TC-3 LABELED -- NO OTHER PIPE IS ACCEPTABLE.

1. All primary and secondary cables shall be in conduit.

2. All road and street crossings shall be in schedule 40, PVC, gray electrical conduit or polyethylene of equal or greater strength specifications. Pipe with other designated use is not acceptable.

3. All risers above finished grade shall be in schedule 80 PVC.

4. Acceptable conduit sizes are as follows:
   - 1Ø, 1/0 primary cable in 1-2" conduit
   - 3Ø, 1/0 primary cable in 1-4" or 3-2" conduits
   - Triplex secondary cable in 1-3" conduit
   - 3Ø, 1000MCM cable in 3-4" conduits

5. Where rock is encountered and the depths shown on UA1 cannot be accomplished, a lesser depth with schedule 80 conduit* and/or control density fill (CDF) may be approved.* Contact CPU Engineering.

6. All conduit terminations shall have end bells or bushings.

7. All conduits that terminate into energized enclosures shall be installed by qualified personnel with a CPU standby person.

8. All conduit runs shall be designed to limit pulling tension to the values specified on UCP1.

9. All conduit ends shall be chamfered 45° x 1/4" internally at all straight ends (not belled ends).

10. All conduits installed for future use shall be marked with 3M electrical markers within six inches at both ends. All ends shall be elbowed up as per Std. ULE (section 1500). The elbow shall NOT be glued to the conduit. The elbow shall be covered with a CPU loop enclosure.

11. Sufficient select backfill shall be placed to prevent crushing of the conduits due to trucks and other heavy equipment.

12. Unused conduits shall have removable plugs designed for that purpose in both ends.

13. Road and street crossings may be either trenched and backfilled, bored or pushed whichever is acceptable to the governing agency.

14. All street and road crossings shall be at property lines.

15. Where conduit bends are required, they shall meet the requirements for cable pulling in the construction specifications. Only manufactured radii are acceptable. No heated bends.

16. A condulet (LB) shall never be used.

17. Conduit sweeps shall be 24" secondary* and 36" primary radius.

18. Conduits installed for futures should be plumbed into transformer with elbows and capped. Flex pipe is not acceptable.

19. Conduits shall be installed so that cable is pulled toward the end bells to avoid scraping cable on sharp edges of conduit.

20. All cut ends of conduits shall be square.

21. Steel mandrels shall be pulled through the conduits to detect damage and debris.

Rev 3: Updated Notes Have A *

Clark Public Utilities

CONSTRUCTION STANDARDS

CONDUIT REQUIREMENTS

REVISIONS

R	DATE	ENGR	OPS
1	2/23/00	HWH	MA
2	12/29/04	LB	AH
3	5/30/07	LB	AH

1 REVISIONS MARKED WITH STAR

PAGE:		CAD FILE:	APP:	SECTION
1 of 1	UC1	UC1	DATE: 9/94	1200

DIRECTIONAL BORING SPECIFICATIONS

1. DIRECTIONAL DRILLING SHALL BE PERFORMED ONLY BY CPU APPROVED ELECTRICAL CONTRACTORS ON JOBS THAT HAVE BEEN PRE-APPROVED FOR DIRECTIONAL DRILLING.

2. DIRECTIONAL DRILLING EQUIPMENT SHALL BE PRE-APPROVED BY CPU.

3. DIRECTIONAL DRILLING EQUIPMENT SHALL BE OPERATED ONLY BY PERSONNEL WHO HAVE BEEN CERTIFIED OR APPROVED BY CPU OR A CPU ACCEPTED AGENCY.

4. CONDUIT INSTALLATIONS SHALL BE 2", 4" OR 6" GRAY✲POLYETHYLENE PIPE OF NOT-LESS-THAN STANDARD RADIUS DIMENSION (SDR) 13.5. (OUTSIDE DIAMETER DIVIDED BY WALL THICKNESS NLT 13.5). ALL CONDUIT WILL MEET ASTM STANDARDS FOR CONSTRUCTION AND INSTALLATION OF POLYETHYLENE (PE) CONDUIT. CONDUIT INSTALLATIONS USING PVC CONDUIT SHALL HAVE DESIGNS, MATERIAL AND INSTALLATION PRACTICES PRE-APPROVED BY CPU.

5. ALL CONNECTION TO PVC SWEEPS OR CONDUIT WILL BE FULLY GLUED USING IRS WELD-ON 600 ADHESIVE OR CPU APPROVED EQUIVALENT. GLUE USED TO FASTEN PVC TO PVC SHALL BE IRS WELD ON 721 WITH A COMPATIBLE PRIMER (OR APPROVED EQUIVALENT GLUE AND PRIMER).

6. A PLOT AND TRACK OF THE BORE USING THE BORE EQUIPMENT SOFTWARE, OR A CERTIFIED COPY OF A SURVEYED PROFILE OF THE BORE, SHALL BE PROVIDED TO CPU BEFORE ACCEPTANCE OF THE INSTALLATION.

7. THE DEPTH OF THE CONDUIT SHALL BE IDENTIFIED BY A STAKE WITH THE DEPTH EVERY 10 FEET ALONG THE ROUTE IN UNPAVED AREAS AND BY THE DEPTH WRITTEN IN MARKER PAINT EVERY 10 FEET ALONG ALONG THE ROUTE IN PAVED AREAS.

8. THE CONDUIT DEPTHS SHALL CONFORM TO THE CPU STANDARDS OF 42" NOMINAL DEPTH, NOT LESS THAN 36", NOR GREATER THAN 48". ANY OTHER DEPTH SHALL REQUIRE PRIOR APPROVAL BY CPU.

9. ALL INSTALLED CONDUITS SHALL BE "PROOFED" USING THE APPROPRIATE MANDREL, AND HAVE A 2500 POUND, 3/4" SEQUENTIALLY-NUMBERED, CONTINUOUS "MULE TAPE" INSTALLED FOR FUTURE CABLE PULLING. CERTIFICATION OF THE TEST MANDRELING SHALL BE PROVIDED TO CPU PRIOR TO ACCEPTANCE BY THE UTILITY.

10. CPU RESERVES THE OPTION TO REQUIRE "POTHOLING" TO DETERMINE DEPTH AND LOCATION FOR ANY INSTALLATIONS THAT ARE QUESTIONABLE. THE "POTHOLING" WILL BE AT THE CONTRACTOR'S EXPENSE.

Rev 2: Added "Gray" to Item #4 and 3/4" mule tape in all conduit in Item #9

Clark Public Utilities

CONSTRUCTION STANDARDS

DIRECTIONAL BORING SPECIFICATIONS

REVISIONS

R	DATE	ENGR	OPS
1	12/29/04	LB	AH
2	12/14/09	KJP	

PAGE: 1 of 1

UD1

CAD FILE: UD1

APP:

DATE: 4/24/01

SECTION 1200

DETAIL ITEM 4
REMOTE SOURCE

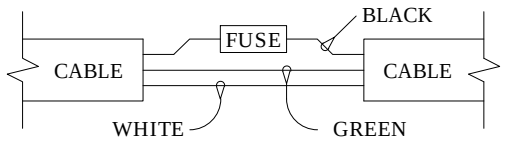

DETAIL ITEM 4
IN VAULT SOURCE

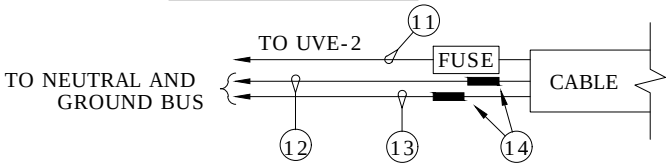

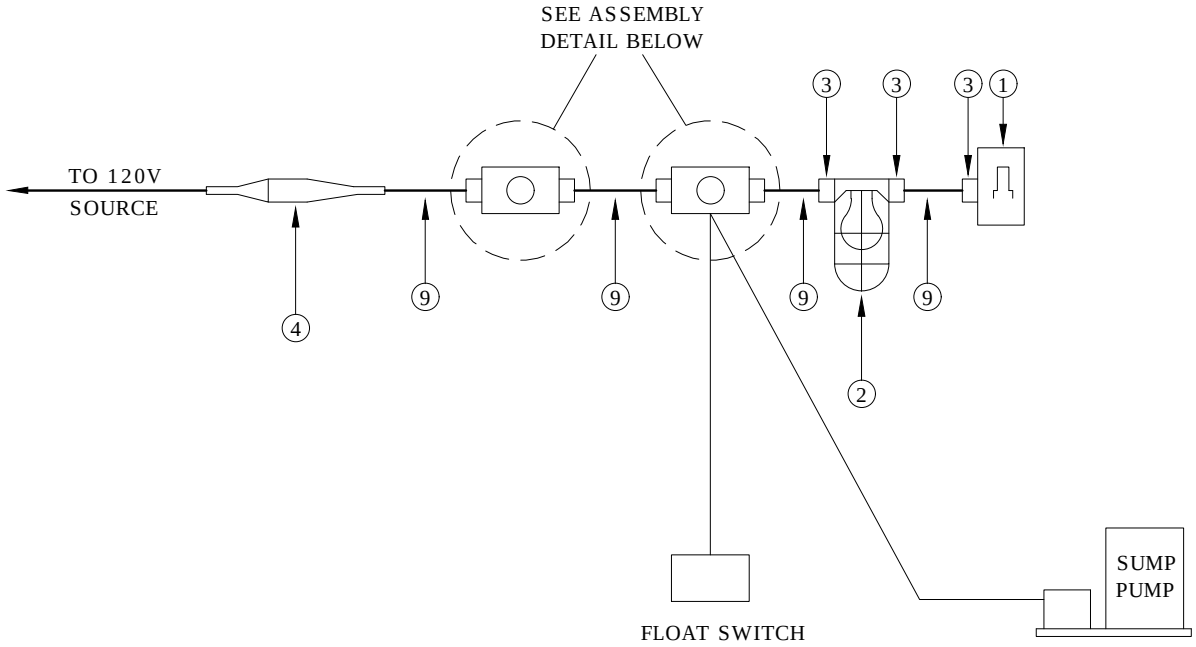

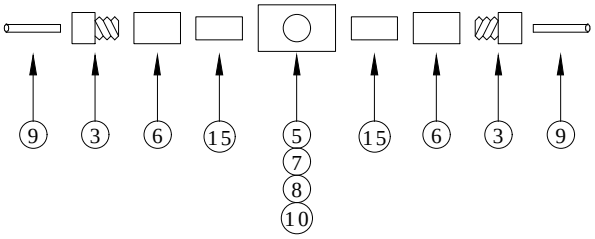

RECEPTACLE ASSEMBLY
(TYPICAL)

STORE ITEM 10 NEAR RECEPTACLE
WHEN NOT IN USE.

R1 - REDRAWN IN CAD

Clark Public Utilities

CONSTRUCTION STANDARDS

UNDERGROUND VAULT
120 VOLT WIRING

REVISIONS

R	DATE	ENGR	OPS
1	2/23/00	HWH	MA

1 REDRAWN IN CAD

PAGE: 1 of 3

UVE1

CAD FILE: UVE1

APP:

DATE: 4/94

SECTION 1200

MATERIAL LIST

ITEM	QTY.	DESCRIPTION	TDM.
1	1	SWITCH, DUST-TIGHT, WATER-TIGHT, 125V, 20A SQUARE 'D' CAT #KW-1	2290
2	1	LIGHT FIXTURE, VAPOR-TIGHT, 150V WITH GLOBE, GUARD AND BASE WITH 2 - 3/4" NPT HUBS HUBBELL CAT #NVX15CHG	2291
3	7	CONNECTOR, STRAIGHT, 3/4" NPT HUB SIZE, MALE, NYLON HUBBELL #SHC-1037-CR	2292
4	1	FUSE HOLDER, HOMAC #SLK	2309
5	2	BOX, CONDUIT, PVC, TYPE FSC, 3/4"	2293
6	4	ADAPTER, FEMALE, 3/4", PVC	1586
7	2	POWER OUTLET, CHROME PLATED BRASS 30A, 3 WIRE, 125V, HUBBELL #60CM63	2294
8	2	ADAPTER, HUBBELL #60CM75 FOR ITEM #7	2295
9	A.R.	CORD, PORTABLE, TYPE STO 3 CONDUCTOR 10 AWG	2296
10	2	ADAPTER, TWIST LOCK MALE 30A TO STRAIGHT BLADE FEMALE 30A, HUBBELL #31CM29	2297
11	A.R.	CONDUCTOR #10 CU BLACK	2298
12	A.R.	CONDUCTOR #10 CU WHITE	2299
13	A.R.	CONDUCTOR #10 CU BARE	2300
14	2	SPLICE COVER, STREET LIGHT, HOMAC FSS20	2115
15	A.R.	CONDUIT, PVC, SCH 40, 3/4"	1564

NOTES:

1. THIS WIRING DIAGRAM IS TYPICAL ONLY. EACH VAULT REQUIRES SPECIAL CONSIDERATION TO LOCATE EACH COMPONENT FOR OPTIMUM UTILIZATION.

2. LOCATE THE LIGHT SWITCH AS CLOSE TO THE LADDER AS POSSIBLE BUT PROTECT IT FROM DAMAGE WHEN EQUIPMENT IS BEING MOVED IN OR OUT.

3. THE 120 VOLT SOURCE MAY BE FROM A TRANSFORMER IN THE VAULT OR FROM AN EXTERNAL SOURCE.

4. THE FLOAD SWITCH LOCATION MUST BE CALCULATED FOR EACH VAULT SEPARATELY. THE LOCATION DEPENDS UPON THE AMOUNT OF OIL IN THE EQUIPMENT IN THE VAULT. REFER THIS TO ENGINEERING.

5. LOCATE RECEPTACLES AS HIGH AS POSSIBLE TO MINIMIZE THE PROBABILITY OF BEING SUBMERGED.

6. LOCATE FUSE ON OR NEAR THE CEILING

7. FUSE IS 600 VOLT, 30 AMP, 13/32" x 1 1/2" NON-GLASS TYPE.

8. CONNECTOR, ITEM 3, SCREWS DIRECTLY INTO HUB.

9. THE NEUTRAL MAY COME FROM ANY AVAILABLE SOURCE WITHIN THE VAULT IF THE 120 VOLT SOURCE IS INTERNAL. IF THE SOURCE IS EXTERNAL, IT MUST INCLUDE A NEUTRAL.

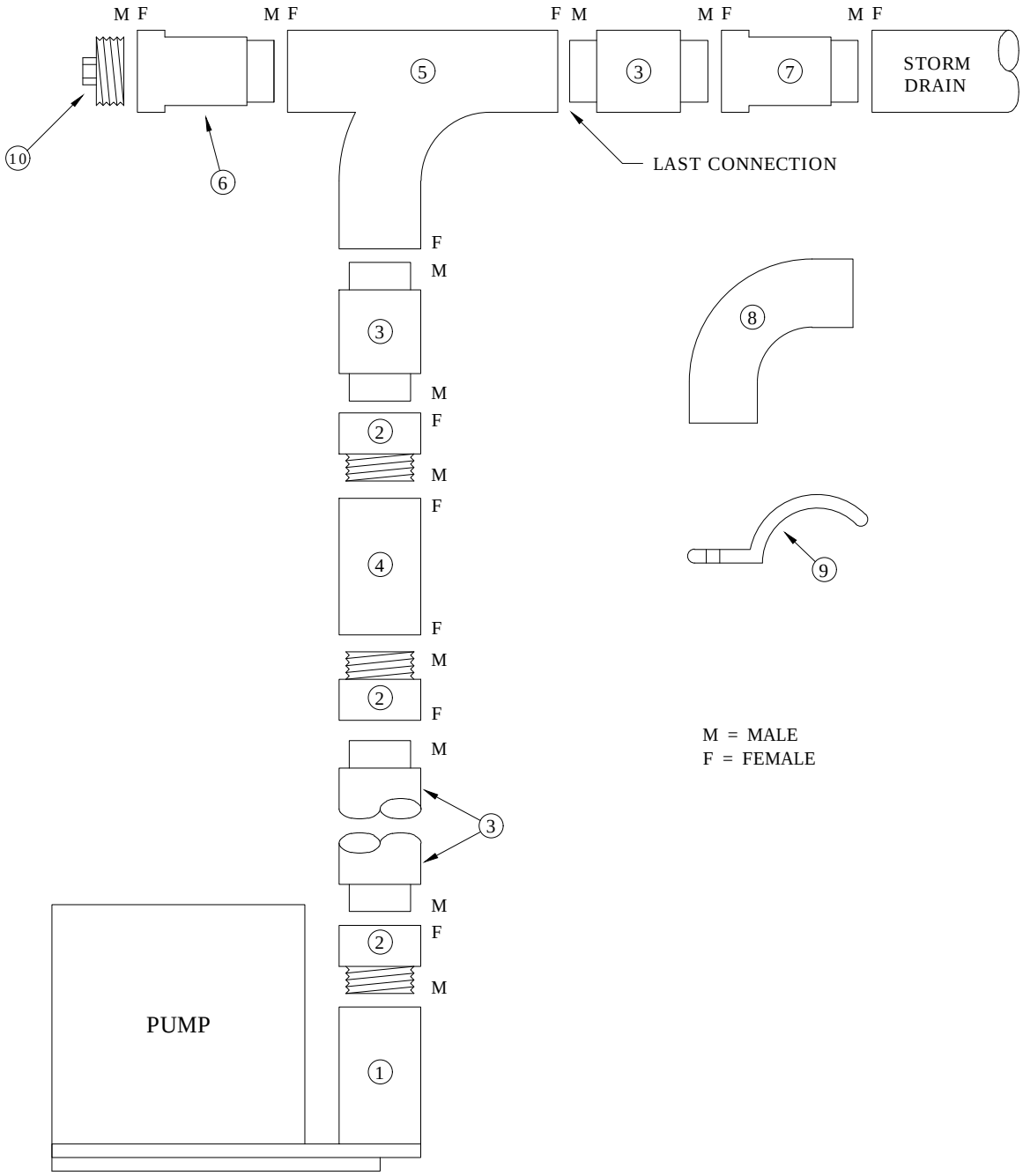

NOTES:

1. ALL PIPE AND FITTINGS MUST BE SCHEDULE 40 SEWER TYPE. SEWER AND WATER FITTINGS DON'T FIT TOGETHER EXCEPT AT THREATED JOINTS.

2. THIS SPECIFICATION IS TYPICAL ONLY. LOCATION OF STORM DRAIN WILL DICTATE PIPE ROUTING.

3. LOCATE CHECK VALVE CLOSE TO PUMP AND IN THE VERTICAL POSITION.

4. PUMP MUST BE IN VAULT SUMP.

5. SEE UVE FOR ELECTRICAL CONNECTIONS.

R1 - REDRAWN IN CAD

Clark Public Utilities

CONSTRUCTION STANDARDS

UNDERGROUND VAULT
SUMP PUMP

REVISIONS

R	DATE	ENGR	OPS
1	2/23/00	HWH	MA

1 REDRAWN IN CAD

PAGE: 1 of 2

UVSP1

CAD FILE: UVSP1

APP:

DATE: 4/92

SECTION 1200

MATERIAL LIST

ITEM	QTY.	DESCRIPTION	TDM.
1	1	SUMP PUMP	1955
2	3	ADAPTER, MALE, 2" PLASTIC, SEWER	2353
3	A. R.	PIPE, SEWER, PLASTIC, 2"	2301
4	1	CHECK VALVE, 2", BRONZE	2354
5	1	COMBINATION Y, 2", PLASTIC	2355
6	1	CLEANOUT FITTING 2", PLASTIC	2356
7	1	REDUCER, PLASTIC, SEWER, 2" x __	A. R.
8	A. R.	1/4 BEND, PLASTIC, SEWER, 2"	2308
9	A. R.	CLAMP, PIPE, 2", ONE BOLT	2307
10	1	CLEANOUT PLUG 2"	2358

1300
UNDERGROUND RISERS, CABLES AND CONNECTORS

2/11/2025

~	U1	1Ø Primary Riser
~	U1R	1Ø Primary Riser, Reverse Feed
~	U2	2Ø Primary Riser
~	U2R	2Ø Primary Riser, Reverse Feed
~	U3	3Ø Primary Riser
~	U3R	3Ø Primary Riser, Reverse Feed
C	U83,U84	Secondary Overhead to Underground Riser Assembly
~	U8P	Secondary OH to UG Riser Assembly with Secondary Pedestal
~	U9	Riser Bracket Assembly
C	U10	1Ø Primary (U1) & Secondary (U8) Riser Guidelines
~	UB20-UB28	Underground Primary Basic Units
~	UCA1-UCA6	Underground Primary Cable Accessories - 200 Amp
~	UCH-0	Underground Cable Reel Handling
~	UCH-1	Underground Cable Handling and Storage
~	UCP1	Underground Cable Pulling Requirements
~	UEP2	Primary Elbow Assembly 200A w/ Current-Reset Fault Indicator
~	UEP3	Primary Elbow Assembly 200A w/ Voltage-Reset Fault Indicator
~	UFI	Underground Fault Indicators
~	UFI2	Underground Cable Current-Reset Fault Indicators Installation
~	UID2	Underground Conductor Identification Tags

N New Standard
R Redrawn Standard
C Changed Standard
~ No Change

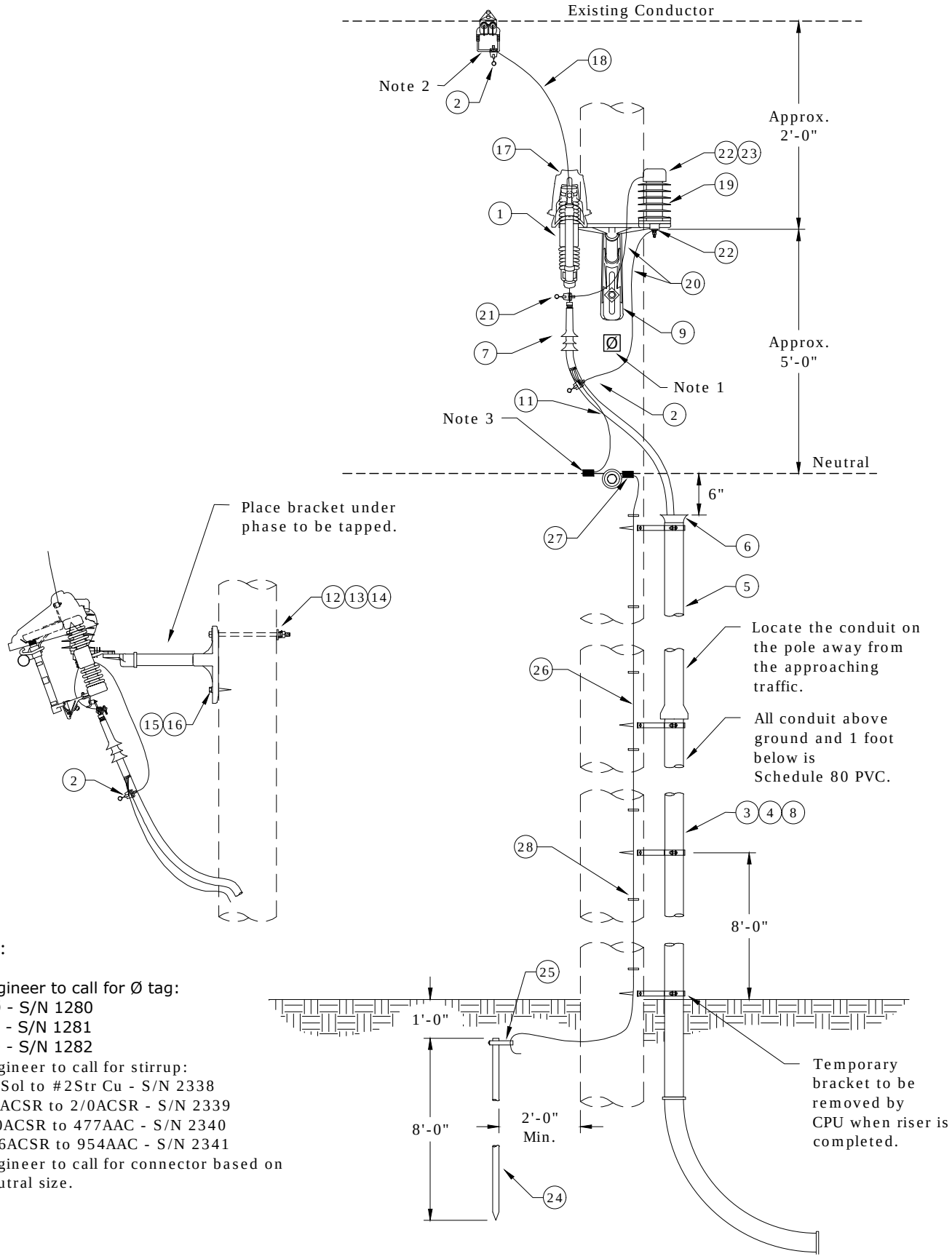

Notes:

1. Engineer to call for Ø tag:
   AØ - S/N 1280
   BØ - S/N 1281
   CØ - S/N 1282
2. Engineer to call for stirrup:
   #6Sol to #2Str Cu - S/N 2338
   #6ACSR to 2/0ACSR - S/N 2339
   1/0ACSR to 477AAC - S/N 2340
   336ACSR to 954AAC - S/N 2341
3. Engineer to call for connector based on neutral size.

Rev. 6 - Corrected drawing and material.

Clark Public Utilities

CONSTRUCTION STANDARDS

SINGLE PHASE
PRIMARY RISER

REVISIONS

R	DATE	ENGR	OPS
3	12/29/04	LB	AH
4	12/14/09	KJP	
5	10/31/17	CM	DK
6	1/16/19	CM	DK

PAGE:		CAD FILE:	APP: ELM	SECTION
1 of 2	U1	U1	DATE: 1/31/80	1300

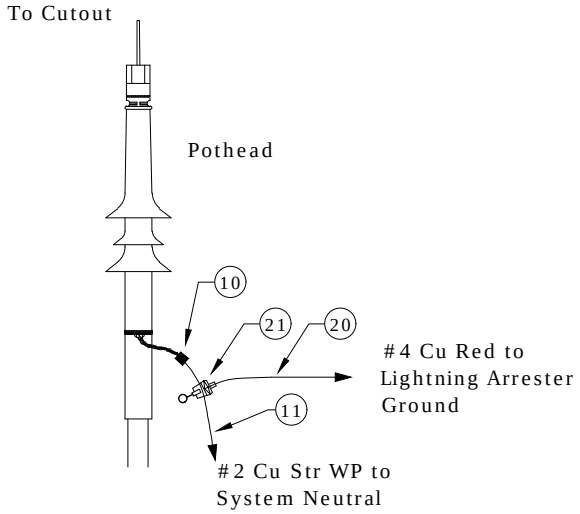

Pothead
Connection Detail

Notes:

4. Connect concentric neutrals to arrester ground using #4 Cu, Red.
5. Make arrester ground terminal-to-concentric neutral jumper as short as possible.

Rev. 6 - Corrected drawing and material.

ITEM NO.	DESCRIPTION	U1 Additional Material QTY.	U1 Additional Material S/N
1	Cutout, Polymer, Universal, 100A, 16kA Asym.	1	2532
2	Clamp, Hotline, GP 1520, #8 to 2/0 Str, Cu Only	1✲	283
3	Screw, Lag, 1/2" x 3", Fetter Drive, Drive Point	6	1131
4	Bracket, Standoff Riser, 10 1/2"	3	226
5	Conduit, PVC, 2" X 10', Sch 80	30✲	2205
6	End Bell, 2", Sch 40	1✲	2206
7	Terminator, 15kV, Cold-Shrink JCN & CN, 1/0	1	2214
8	Clamp, Standoff Bracket, Conduit, 2"	3	295
9	Bracket, Arrester/Cutout Mounting, 1ø Fiberglass 18"	1	2537
10	Connector, Crimpet, Cu 2/2 - 2/2 (2C2)	1	455
11	Conductor, Cu #2, 1/C, 7-Str, SD, 600V, HMP	10	393
12	Bolt, Machine, 5/8" x 12", 12,400 lbs. Ultimate Tensile	1	155
13	Washer, Curved, Square, Cast, 3" x 3" x 3/8" Thick x 13/16" Hole	1	1392
14	Washer, Lock, Spring, Double Coil, Galv. 5/8"	1	2217
15	Screw, Lag, 1/2" x 4 1/2", Twist Drive, Drive Point	1	1132
16	Washer, Flat, Round Galv., 1/2"	1	1394
17	Guard, Wildlife, Cutout, Polymer	1	2928 ✲
18	Conductor, Cu 1/C #2, 7-Str, 600V, Red, THW	3	2513

ITEM NO.	DESCRIPTION	LA2 QTY.	LA2 S/N
19	Arrester, Surge, 9kV, MOV, Riser Pole	1	58
20	Conductor, Cu 1/C #4, 7-Str, 600V, Red, THW	7	2512
21	Clamp, Hotline, GP 1520, #8 to 2/0 Str, Cu Only	2	283
22	Connector, Compression Lug, #4, Cu/Al, One-Hole, Tin-Plated, For Arrester	2	2548
23	Guard, Wildlife, Polymer Arrester	1	2583

ITEM NO.	DESCRIPTION	N1 QTY.	N1 S/N
24	Rod, Ground, 5/8" x 8'	1	1124
25	Clamp, Ground Rod, 5/8", Bronze Small	1	281
26	Conductor, Copper-Clad Steel, #4 Cu Equivalent, Covered	40	1512
27	Connector, Cabelok, Al/Cu, #2-2/0 Run, #6-#1 Tap	1	413
28	Staple, Ground, Barbed, Galv. 1 1/2"	24	2707

Clark Public Utilities

CONSTRUCTION STANDARDS

SINGLE PHASE
PRIMARY RISER

REVISIONS

R	DATE	ENGR	OPS
3	12/29/04	LB	AH
4	12/14/09	KJP	
5	10/31/17	CM	DK
6	1/16/19	CM	DK

PAGE: 2 of 2

U1

CAD FILE: U1

APP: ELM
DATE: 1/31/80

SECTION 1300

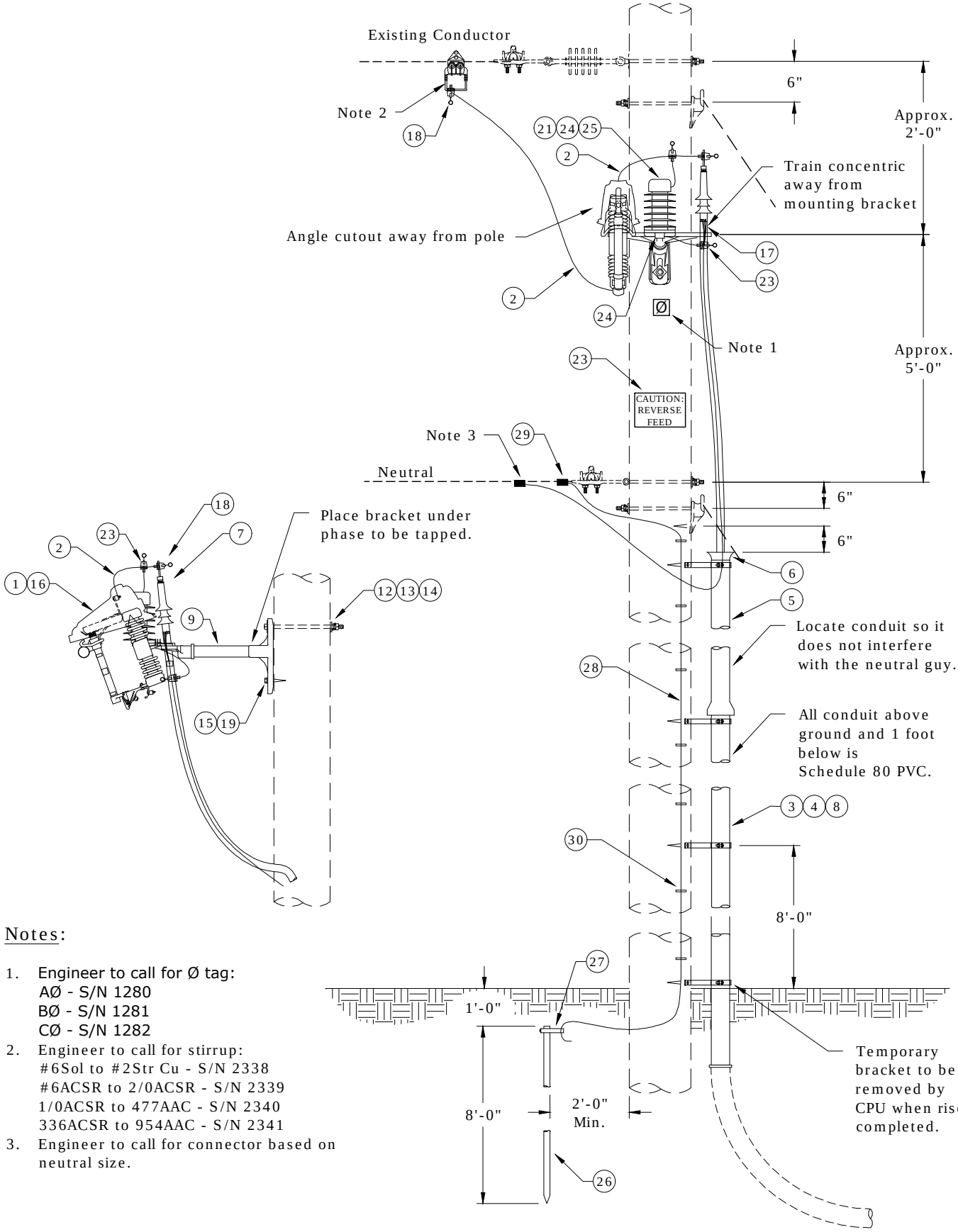

Notes:

1. Engineer to call for Ø tag:
   AØ - S/N 1280
   BØ - S/N 1281
   CØ - S/N 1282
2. Engineer to call for stirrup:
   #6Sol to #2Str Cu - S/N 2338
   #6ACSR to 2/0ACSR - S/N 2339
   1/0ACSR to 477AAC - S/N 2340
   336ACSR to 954AAC - S/N 2341
3. Engineer to call for connector based on neutral size.

Rev. 2 - Moved arrester to middle of bracket, added cutout direction note, and updated materials.

Clark Public Utilities

CONSTRUCTION STANDARDS

SINGLE PHASE
PRIMARY RISER
REVERSE FEED

REVISIONS

R	DATE	ENGR	OPS
1	10/31/17	CM	DK
2	1/16/19	CM	DK

PAGE: 1 of 2

U1R

CAD FILE: U1R

APP: HWH/MA
DATE: 2/23/00

SECTION 1300

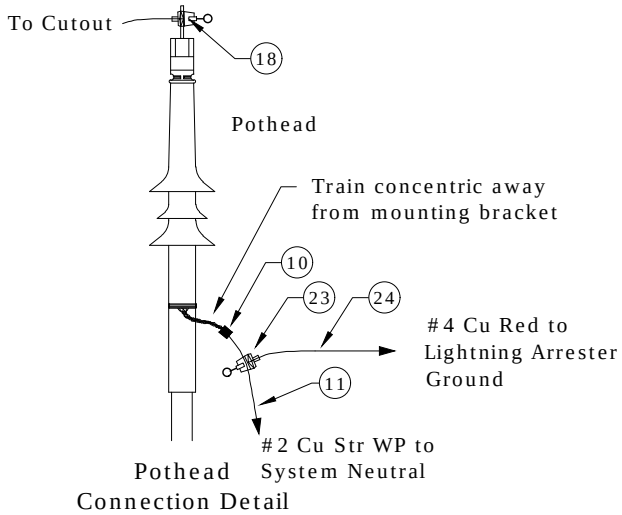

Notes:

4. Connect concentric neutrals to arrester ground using #4 Cu, Red.
5. Make arrester ground terminal-to-concentric neutral jumper as short as possible.

Rev. 2 - Moved arrester to middle of bracket, added cutout direction note, and updated materials.

ITEM NO.	DESCRIPTION	U1R Additional Material QTY.	U1R Additional Material S/N
1	Cutout, Polymer, Universal, 100A, 16kA Asym.	1	2532
2	Conductor, Cu 1/C #2, 7 Str, 600V, Red, THW	6	2513
3	Screw, Lag, 1/2" x 3", Fetter Drive, Drive Point	6	1131
4	Bracket, Standoff Riser, 10 1/2"	3	226
5	Conduit, PVC, 2" x 10', Sch 80	30	2205
6	End Bell, 2", Sch 40	1	2206
7	Terminator, 15kV, Cold-Shrink, JCN & CN, 1/0	1	2214
8	Clamp, Standoff Bracket, 2" Conduit	3	295
9	Bracket, Arrester/Cutout Mounting, 1Ø, Fiberglass 18"	1	2537
10	Connector, Crimpet, Cu, 2/2 - 2/2 (2C2)	1	455
11	Conductor, Cu #2, 1/C, 7-Str, SD, 600V, HMP	10	393
12	Bolt, Machine 5/8" x 12", 12,400 lbs. Ultimate Tensile	1	155
13	Washer, Curved, Square, Cast, 3" x 3" x 3/8" Thick x 13/16" Hole	1	1392
14	Washer, Lock, Spring, Double Coil, Galv. 5/8"	1	2217
15	Screw, Lag 1/2" x 4 1/2", Twist Drive, Drive Point	1	1132
16	Guard, Wildlife, Cutout, Polymer	1	2928
17	Clamp, 2-Bolt, for 1/0 Terminator	1	1858
18	Clamp, Hotline, GP 1520, #8 to 2/0 Str, Cu Only	2	283
19	Washer, Flat, Round Galv. 1/2"	1	1394
20	Sign, "Caution: Reverse Feed"	1	2719

ITEM NO.	DESCRIPTION	LA2 QTY.	LA2 S/N
21	Arrester, Surge, 9kV, MOV, Riser Pole	1	58
22	Conductor, Cu 1/C #4, 7-Str, 600V, Red, THW	7	2512
23	Clamp, Hotline, GP 1520, #8 to 2/0 Str, Cu Only	2	283
24	Connector, Compression Lug, #4, Cu/Al, One-Hole, Tin-Plated, For Arrester	2	2548
25	Guard, Wildlife, Polymer Arrester	1	2583

ITEM NO.	DESCRIPTION	N1 QTY.	N1 S/N
26	Rod, Ground, 5/8" x 8'	1	1124
27	Clamp, Ground Rod, 5/8", Bronze Small	1	281
28	Conductor, Copper-Clad Steel, #4 Cu Equivalent, Covered	40	1512
29	Connector, Cabelok, Al/Cu, #2-2/0 Run, #6-#1 Tap	1	413
30	Staple, Ground, Barbed, Galvanized, 1 1/2"	24	2707

Clark Public Utilities

CONSTRUCTION STANDARDS

SINGLE PHASE
PRIMARY RISER
REVERSE FEED

REVISIONS

R	DATE	ENGR	OPS
1	10/31/17	CM	DK
2	1/16/19	CM	DK

PAGE: 2 of 2

U1R

CAD FILE: U1R

APP: HWH/MA
DATE: 2/23/00

SECTION 1300

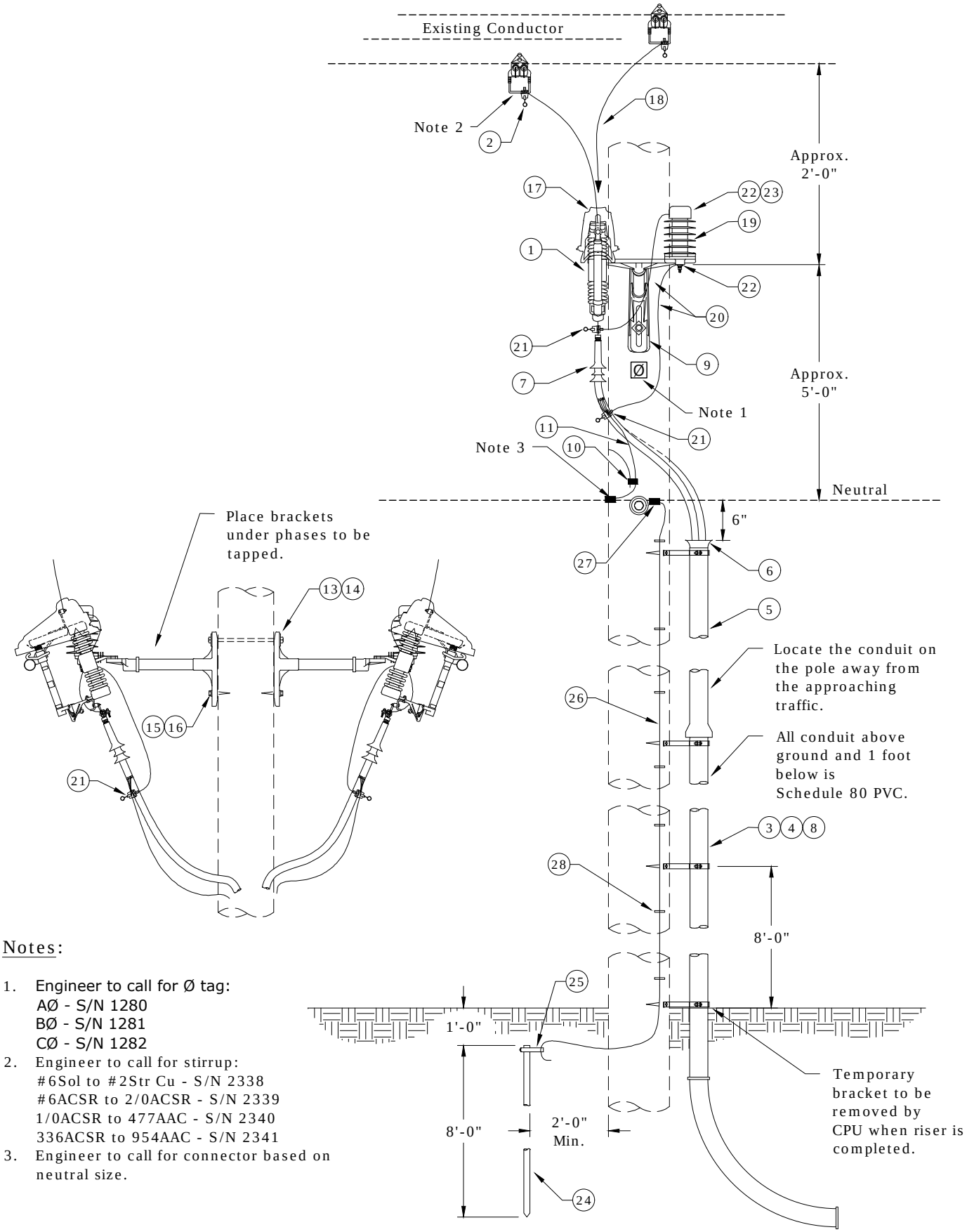

Notes:

1. Engineer to call for Ø tag:
   AØ - S/N 1280
   BØ - S/N 1281
   CØ - S/N 1282
2. Engineer to call for stirrup:
   #6Sol to #2Str Cu - S/N 2338
   #6ACSR to 2/0ACSR - S/N 2339
   1/0ACSR to 477AAC - S/N 2340
   336ACSR to 954AAC - S/N 2341
3. Engineer to call for connector based on neutral size.

Rev. 5 - Corrected drawing and material issue.

Clark Public Utilities

CONSTRUCTION STANDARDS

TWO PHASE
PRIMARY RISER

REVISIONS

R	DATE	ENGR	OPS
2	12/29/04	LB	AH
3	12/14/09	KJP	
4	10/31/17	CM	DK
5	1/16/19	CM	DK

PAGE: 1 of 2

U2

CAD FILE: U2

APP: ELM

DATE: 2/22/00

SECTION 1300

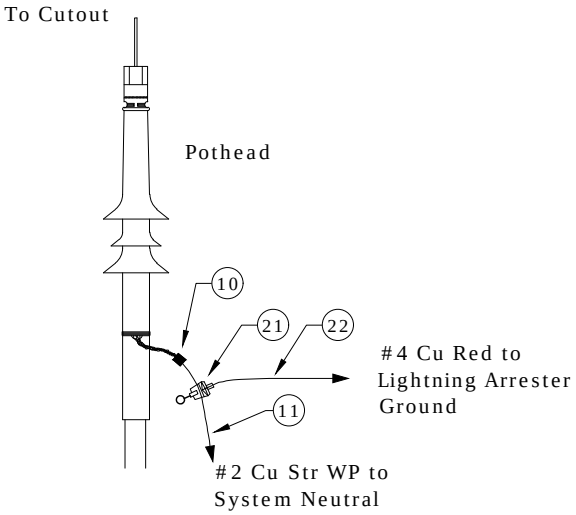

Pothead
Connection Detail

Notes:

4. Connect concentric neutrals to arrester ground using #4 Cu, Red.
5. Make arrester ground terminal-to-concentric neutral jumper as short as possible.

Rev. 5 - Corrected drawing and material.

ITEM NO.	DESCRIPTION	U2 Additional Material QTY.	U2 Additional Material S/N
1	Cutout, Polymer, Universal, 100A, 16kA Asym.	2	2532
2	Clamp, Hotline, GP 1520, #8 to 2/0 Str, Cu Only	2✲	283
3	Screw, Lag, 1/2" x 3", Fetter Drive, Drive Point	6	1131
4	Bracket, Standoff Riser, 10 1/2"	3	226
5	Conduit, PVC, 4" X 10', Sch 80	30✲	2203
6	End Bell, 4", Sch 40	1✲	2204
7	Terminator, 15kV, Cold-Shrink JCN & CN, 1/0	2	2214
8	Clamp, Standoff Bracket, Conduit, 4"	3	297
9	Bracket, Arrester/Cutout Mounting, 1ø Fiberglass 18"	2	2537
10	Connector, Crimpet, Cu 2/2 - 2/2 (2C2)	2	455
11	Conductor, Cu #2, 1/C, 7-Str, SD, 600V, HMP	20	393
13	Bolt, Machine, 5/8" x 14", 12,400 lb Ultimate	1	156
14	Washer, Lock, Spring, Double Coil, Galv. 5/8"	1	2217
15	Screw, Lag, 1/2" x 4 1/2", Twist Drive, Drive Point	2	1132
16	Washer, Flat, Round Galv., 1/2"	2	1394
17	Guard, Wildlife, Cutout, Polymer	2	2928 ✲
18	Conductor, Cu 1/C #2, 7-Str, 600V, Red, THW	6	2513

ITEM NO.	DESCRIPTION	LA2(2) QTY.	LA2(2) S/N
19	Arrester, Surge, 9kV, MOV, Riser Pole	2	58
20	Conductor, Cu 1/C #4, 7-Str, 600V, Red, THW	14	2512
21	Clamp, Hotline, GP 1520, #8 to 2/0 Str, Cu Only	4	283
22	Connector, Compression Lug, #4, Cu/Al, One-Hole, Tin-Plated, For Arrester	4	2548
23	Guard, Wildlife, Polymer Arrester	2	2583

ITEM NO.	DESCRIPTION	N1 QTY.	N1 S/N
24	Rod, Ground, 5/8" x 8'	1	1124
25	Clamp, Ground Rod, 5/8", Bronze Small	1	281
26	Conductor, Copper-Clad Steel, #4 Cu Equivalent, Covered	40	1512
27	Connector, Cabelok, Al/Cu, #2-2/0 Run, #6-#1 Tap	1	413
28	Staple, Ground, Barbed, Galvanized, 1 1/2"	24	2707

Clark Public Utilities

CONSTRUCTION STANDARDS

TWO PHASE
PRIMARY RISER

REVISIONS

R	DATE	ENGR	OPS
2	12/29/04	LB	AH
3	12/14/09	KJP	
4	10/31/17	CM	DK
5	1/16/19	CM	DK

PAGE: 2 of 2

U2

CAD FILE: U2

APP: ELM
DATE: 2/22/00

SECTION 1300

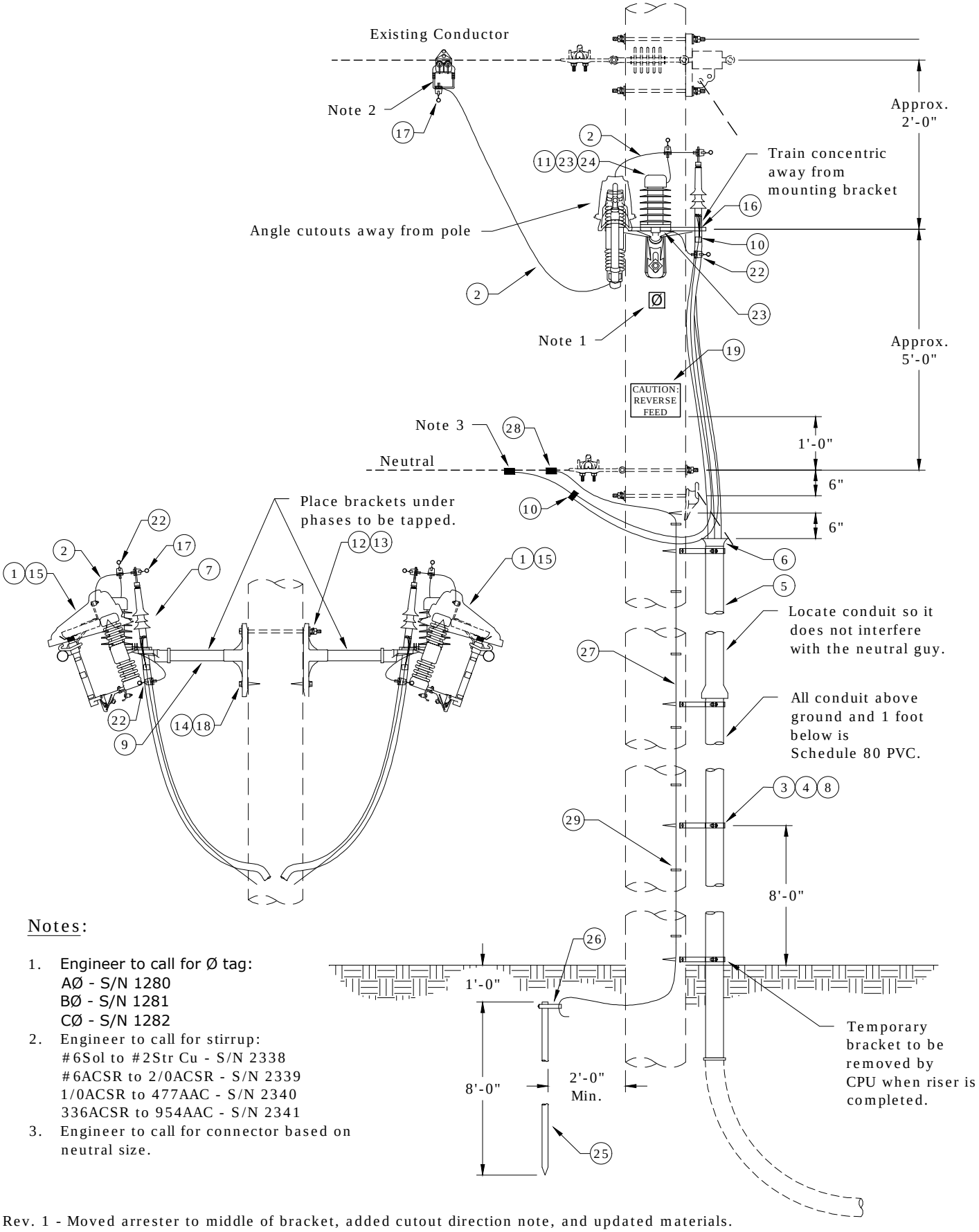

Notes:

1. Engineer to call for Ø tag:
   AØ - S/N 1280
   BØ - S/N 1281
   CØ - S/N 1282
2. Engineer to call for stirrup:
   #6Sol to #2Str Cu - S/N 2338
   #6ACSR to 2/0ACSR - S/N 2339
   1/0ACSR to 477AAC - S/N 2340
   336ACSR to 954AAC - S/N 2341
3. Engineer to call for connector based on neutral size.

Rev. 1 - Moved arrester to middle of bracket, added cutout direction note, and updated materials.

Clark Public Utilities

CONSTRUCTION STANDARDS

TWO PHASE
PRIMARY RISER
REVERSE FEED

REVISIONS

R	DATE	ENGR	OPS
1	1/16/19	CM	DK

PAGE: 1 of 2

U2R

CAD FILE: U2R

APP: CM/DK
DATE: 10/31/17

SECTION 1300

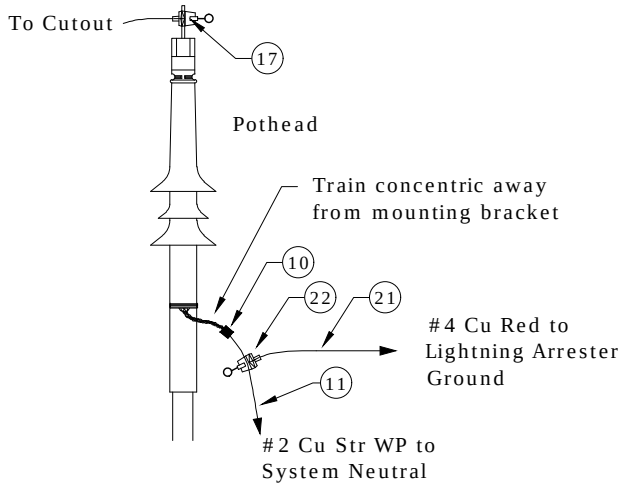

Pothead
Connection Detail

Notes:

4. Connect concentric neutrals to arrester ground using #4 Cu, Red.
5. Make arrester ground terminal-to-concentric neutral jumper as short as possible.

Rev. 1 - Moved arrester to middle of bracket, added cutout direction note, and updated materials.

ITEM NO.	DESCRIPTION	U2R Additional Material QTY.	U2R Additional Material S/N
1	Cutout, Polymer, Universal, 100A, 16kA Asym.	2	2532
2	Conductor, Cu 1/C #2, 7-Str, 600V, Red, THW	12	2513
3	Screw, Lag, 1/2" x 3", Fetter Drive, Drive Point	6	1131
4	Bracket, Standoff Riser, 10 1/2"	3	226
5	Conduit, PVC, 4" x 10', Sch 80	30	2203
6	End Bell, 4", Sch 40	2	2204
7	Terminator, 15kV, Cold-Shrink, JCN & CN, 1/0	2	2214
8	Clamp, Standoff Bracket, 4" Conduit	3	297
9	Bracket, Arrester/Cutout Mounting, 1Ø, Fiberglass 18"	2	2537
10	Connector, Crimpet, Cu, 2/2 - 2/2 (2C2)	4	455
11	Conductor, Cu #2, 1/C, 7-Str, SD, 600V, HMP	20	393
12	Bolt, Machine 5/8" x 14", 12,400 lbs. Ultimate Tensile	1	156
13	Washer, Lock, Spring, Double Coil, Galv. 5/8"	1	2217
14	Screw, Lag 1/2" x 4 1/2", Twist Drive, Drive Point	2	1132
15	Guard, Wildlife, Cutout, Polymer	2	2928
16	Clamp, 2-Bolt, for 1/0 Terminator	2	1858
17	Clamp, Hotline, GP 1520, #8 to 2/0 Str, Cu Only	4	283
18	Washer, Flat, Round Galv. 1/2"	2	1394
19	Sign, "Caution: Reverse Feed"	1	2719

ITEM NO.	DESCRIPTION	LA2(2) QTY.	LA2(2) S/N
20	Arrester, Surge, 9kV, MOV, Riser Pole	2	58
21	Conductor, Cu 1/C #4, 7-Str, 600V, Red, THW	14	2512
22	Clamp, Hotline, GP 1520, #8 to 2/0 Str, Cu Only	4	283
23	Connector, Compression Lug, #4, Cu/Al, One-Hole, Tin-Plated, For Arrester	4	2548
24	Guard, Wildlife, Polymer Arrester	2	2583

ITEM NO.	DESCRIPTION	N1 QTY.	N1 S/N
25	Rod, Ground, 5/8" x 8'	1	1124
26	Clamp, Ground Rod, 5/8", Bronze Small	1	281
27	Conductor, Copper-Clad Steel, #4 Cu Equivalent, Covered	40	1512
28	Connector, Cabelok, Al/Cu, #2-2/0 Run, #6-#1 Tap	1	413
29	Staple, Ground, Barbed, Galvanized, 1 1/2"	24	2707

Clark Public Utilities

CONSTRUCTION STANDARDS

TWO PHASE
PRIMARY RISER
REVERSE FEED

REVISIONS

R	DATE	ENGR	OPS
1	1/16/19	CM	DK

PAGE: 2 of 2

U2R

CAD FILE: U2R

APP: CM/DK
DATE: 10/31/17

SECTION 1300

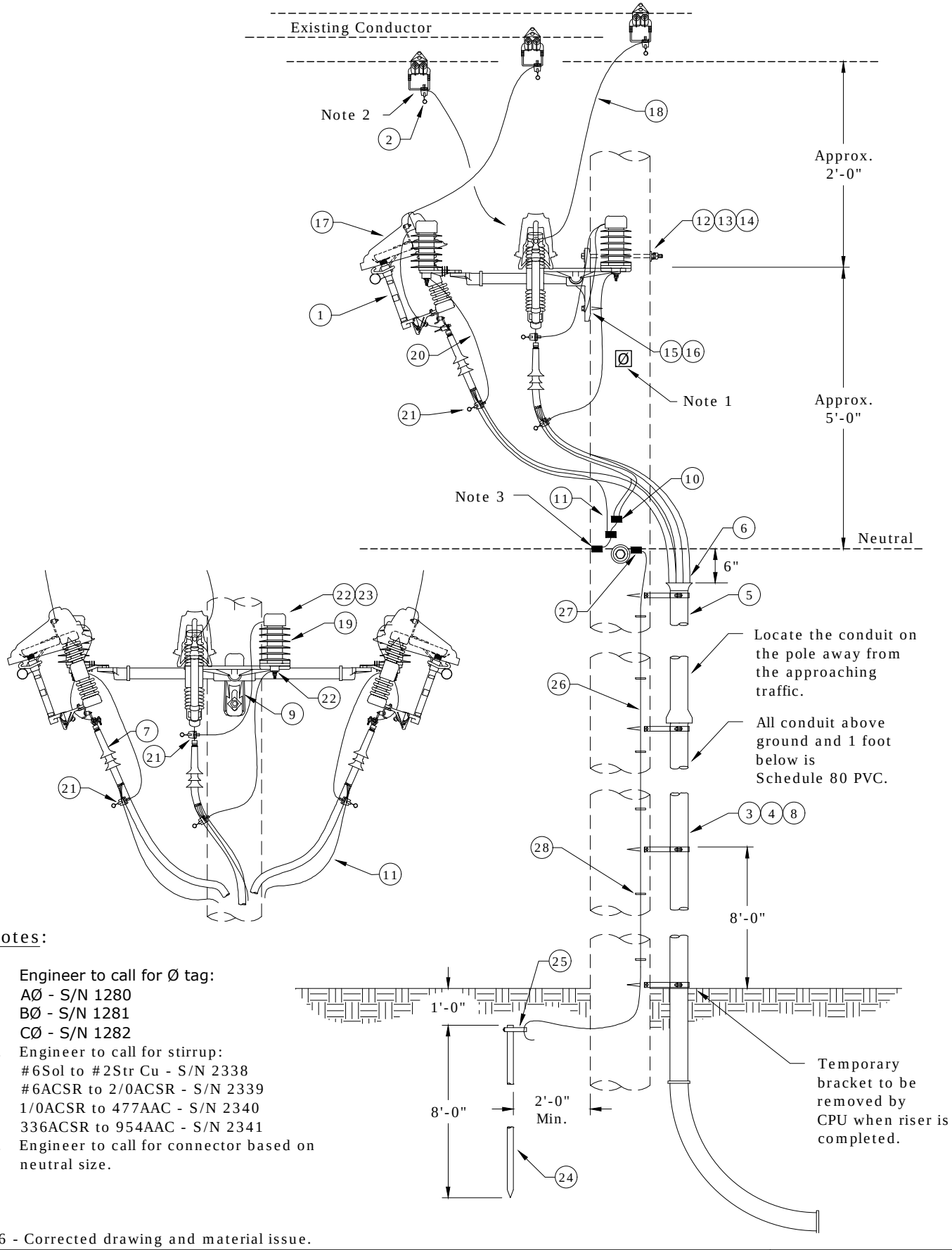

Notes:

1. Engineer to call for Ø tag:
   AØ - S/N 1280
   BØ - S/N 1281
   CØ - S/N 1282
2. Engineer to call for stirrup:
   #6Sol to #2Str Cu - S/N 2338
   #6ACSR to 2/0ACSR - S/N 2339
   1/0ACSR to 477AAC - S/N 2340
   336ACSR to 954AAC - S/N 2341
3. Engineer to call for connector based on neutral size.

Rev. 6 - Corrected drawing and material issue.

Clark Public Utilities

CONSTRUCTION STANDARDS

THREE PHASE
PRIMARY RISER

REVISIONS

R	DATE	ENGR	OPS
3	12/29/04	LB	AH
4	12/14/09	KJP	
5	10/31/17	CM	DK
6	1/16/19	CM	DK

PAGE:		CAD FILE:	APP: ELM	SECTION
1 of 2	U3	U3	DATE: 1/31/80	1300

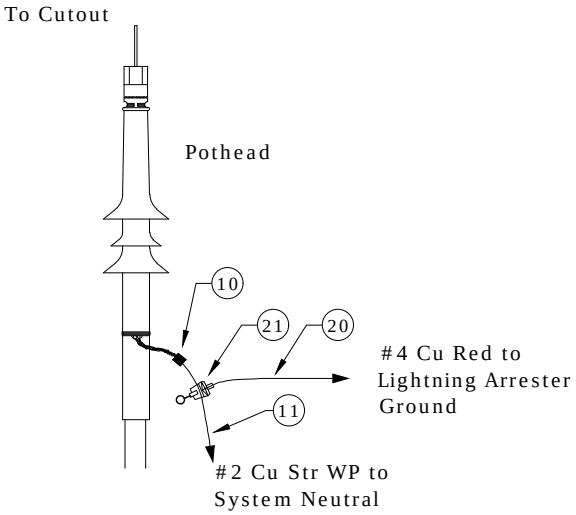

Pothead
Connection Detail

Notes:

4. Connect concentric neutrals to arrester ground using #4 Cu, Red.
5. Make arrester ground terminal-to-concentric neutral jumper as short as possible.

Rev. 6 - Corrected drawing and material issue.

ITEM NO.	DESCRIPTION	U3 Additional Material QTY.	S/N
1	Cutout, Polymer, Universal, 100A, 16kA Asym.	3	2532
2	Clamp, Hotline, GP 1520, #8 to 2/0 Str, Cu Only	3	283✲
3	Screw, Lag, 1/2" x 3", Fetter Drive, Drive Point	6	1131
4	Bracket, Standoff Riser, 10 1/2"	3	226
5	Conduit, PVC, 4" x 10', Sch 80	30	2203
6	End Bell, 4", Sch 40	1	2204
7	Terminator, 15kV, Cold-Shrink, JCN & CN, 1/0	3	2214
8	Clamp, Standoff Bracket, 4" Conduit	3	297✲
9	Bracket, Arrester/Cutout Mounting, 3Ø Fiberglass 18"	1	2538
10	Connector, Crimpet, Cu 2/2 - 2/2 (2C2)	3	455
11	Conductor, Cu #2, 1/C, 7-Str, SD, 600V, HMP	30	393
12	Bolt, Machine, 5/8" x 12", 12,400 lbs. Ultimate Tensile	1	155
13	Washer, Curved, Square, Cast, 3" x 3" x 3/8" Thick x 13/16" Hole	1	1392
14	Washer, Lock Spring, Double Coil, Galv. 5/8"	1	2217
15	Screw, Lag, 1/2" x 4 1/2", Twist Drive, Drive Point	1	1132
16	Washer, Flat, Round, Galv., 1/2"	1	1394
17	Guard, Wildlife, Cutout, Polymer	3	2928✲
18	Conductor, Cu 1/C #2, 7 STR, 600V, Red	9	2513

ITEM NO.	DESCRIPTION	LA2(3) QTY.	S/N
19	Arrester, Surge, 9kV, MOV, Riser Pole	3	58
20	Conductor, Cu 1/C #4, 7-Str, 600V, Red, THW	21	2512
21	Clamp, Hotline, GP 1520, #8 to 2/0 Str, Cu Only	6	283
22	Connector, Compression Lug, #4, Cu/Al, One-Hole, Tin-Plated, For Arrester	6	2548
23	Guard, Wildlife, Polymer Arrester	3	2583

ITEM NO.	DESCRIPTION	N1 QTY.	S/N
24	Rod, Ground, 5/8" x 8'	1	1124
25	Clamp, Ground Rod, 5/8" Bronze Small	1	281
26	Cond, Copper-Clad Steel, #4 Cu Equivalent, Covered	40	1512
27	Connector, Cabelok, Al/Cu, #2-2/0 Run, #6-#1 Tap	1	413
28	Staple, Ground, Barbed, Galvanized, 1 1/2"	24	2707

Clark Public Utilities

CONSTRUCTION STANDARDS

THREE PHASE
PRIMARY RISER

REVISIONS

R	DATE	ENGR	OPS
3	12/29/04	LB	AH
4	12/14/09	KJP	
5	10/31/17	CM	DK
6	1/16/19	CM	DK

PAGE: 2 of 2 | U3 | CAD FILE: U3 | APP: ELM | DATE: 1/31/80 | SECTION 1300

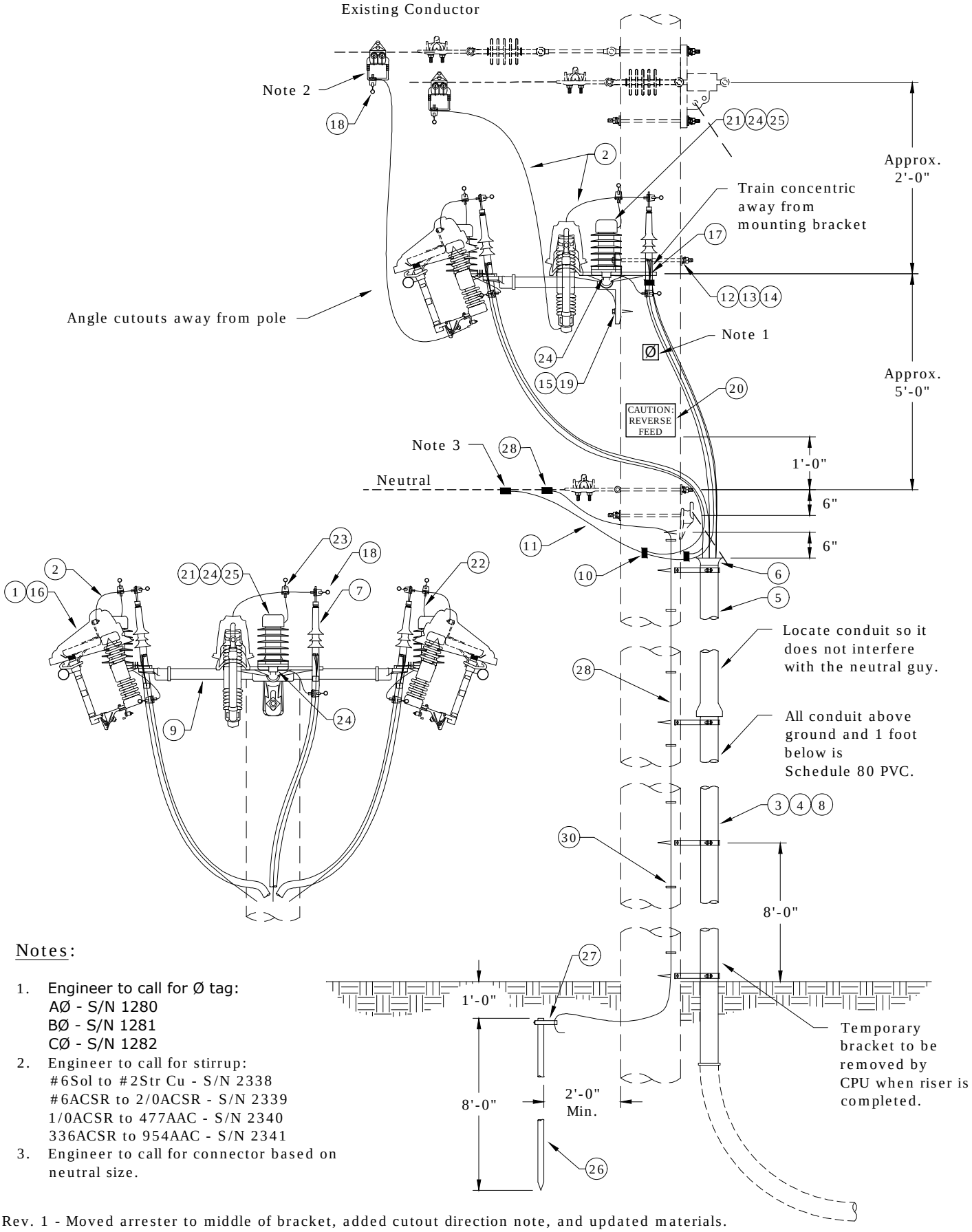

Notes:

1. Engineer to call for Ø tag:
   AØ - S/N 1280
   BØ - S/N 1281
   CØ - S/N 1282
2. Engineer to call for stirrup:
   #6Sol to #2Str Cu - S/N 2338
   #6ACSR to 2/0ACSR - S/N 2339
   1/0ACSR to 477AAC - S/N 2340
   336ACSR to 954AAC - S/N 2341
3. Engineer to call for connector based on neutral size.

Rev. 1 - Moved arrester to middle of bracket, added cutout direction note, and updated materials.

Clark Public Utilities

CONSTRUCTION STANDARDS

THREE PHASE
PRIMARY RISER
REVERSE FEED

REVISIONS

R	DATE	ENGR	OPS
1	1/16/19	CM	DK

PAGE: 1 of 2

U3R

CAD FILE: U3R

APP: CM/DK
DATE: 10/31/17

SECTION 1300

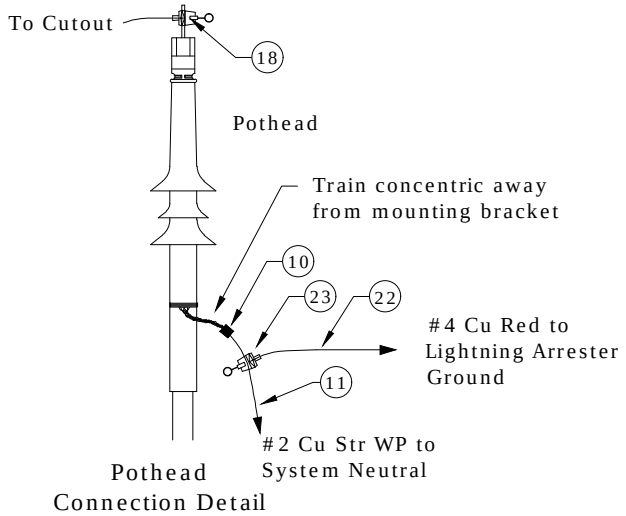

Notes:

4. Connect concentric neutrals to arrester ground using #4 Cu, Red.
5. Make arrester ground terminal-to-concentric neutral jumper as short as possible.

Rev. 1 - Moved arrester to middle of bracket, added cutout direction note, and updated materials.

ITEM NO.	DESCRIPTION	U3R Additional Material QTY.	U3R Additional Material S/N
1	Cutout, Polymer, Universal, 100A, 16kA Asym.	3	2532
2	Conductor, Cu 1/C #2, 7 Str, 600V, Red, THW	18	2513
3	Screw, Lag, 1/2" x 3", Fetter Drive, Drive Point	6	1131
4	Bracket, Standoff Riser, 10 1/2"	3	226
5	Conduit, PVC, 4" x 10', Sch 80	30	2203
6	End Bell, 4", Sch 40	1	2204
7	Terminator, 15kV, Cold-Shrink, JCN & CN, 1/0	3	2214
8	Clamp, Standoff Bracket, 4" Conduit	3	297
9	Bracket, Arrester/Cutout Mounting, 3Ø, Fiberglass 18"	1	2538
10	Connector, Crimpet, Cu, 2/2 - 2/2 (2C2)	5	455
11	Conductor, Cu #2, 1/C, 7-Str, SD, 600V, HMP	30	393
12	Bolt, Machine 5/8" x 12", 12,400 lbs. Ultimate Tensile	1	155
13	Washer, Curved, Square, Cast, 3" x 3" x 3/8" Thick x 13/16" Hole	1	1392
14	Washer, Lock, Spring, Double Coil, Galv. 5/8"	1	2217
15	Screw, Lag 1/2" x 4 1/2", Twist Drive, Drive Point	1	1132
16	Guard, Wildlife, Cutout, Polymer	3	2928
17	Clamp, 2-Bolt, for 1/0 Terminator	3	1858
18	Clamp, Hotline, GP 1520, #8 to 2/0 Str, Cu Only	6	283
19	Washer, Flat, Round Galv. 1/2"	1	1394
20	Sign, "Caution: Reverse Feed"	1	2719

ITEM NO.	DESCRIPTION	LA2(3) QTY.	LA2(3) S/N
21	Arrester, Surge, 9kV, MOV, Riser Pole	3	58
22	Conductor, Cu 1/C #4, 7-Str, 600V, Red, THW	21	2512
23	Clamp, Hotline, GP 1520, #8 to 2/0 Str, Cu Only	6	283
24	Connector, Compression Lug, #4, Cu/Al, One-Hole, Tin-Plated, For Arrester	6	2548
25	Guard, Wildlife, Polymer Arrester	3	2583

ITEM NO.	DESCRIPTION	N1 QTY.	N1 S/N
26	Rod, Ground, 5/8" x 8'	1	1124
27	Clamp, Ground Rod, 5/8", Bronze Small	1	281
28	Conductor, Copper-Clad Steel, #4 Cu Equivalent, Covered	40	1512
29	Connector, Cabelok, Al/Cu, #2-2/0 Run, #6-#1 Tap	1	413
30	Staple, Ground, Barbed, Galvanized, 1 1/2"	24	2707

Clark Public Utilities

CONSTRUCTION STANDARDS

THREE PHASE
PRIMARY RISER
REVERSE FEED

REVISIONS

R	DATE	ENGR	OPS
1	1/16/19	CM	DK

PAGE: 2 of 2

U3R

CAD FILE: U3R

APP: CM/DK
DATE: 10/31/17

SECTION 1300

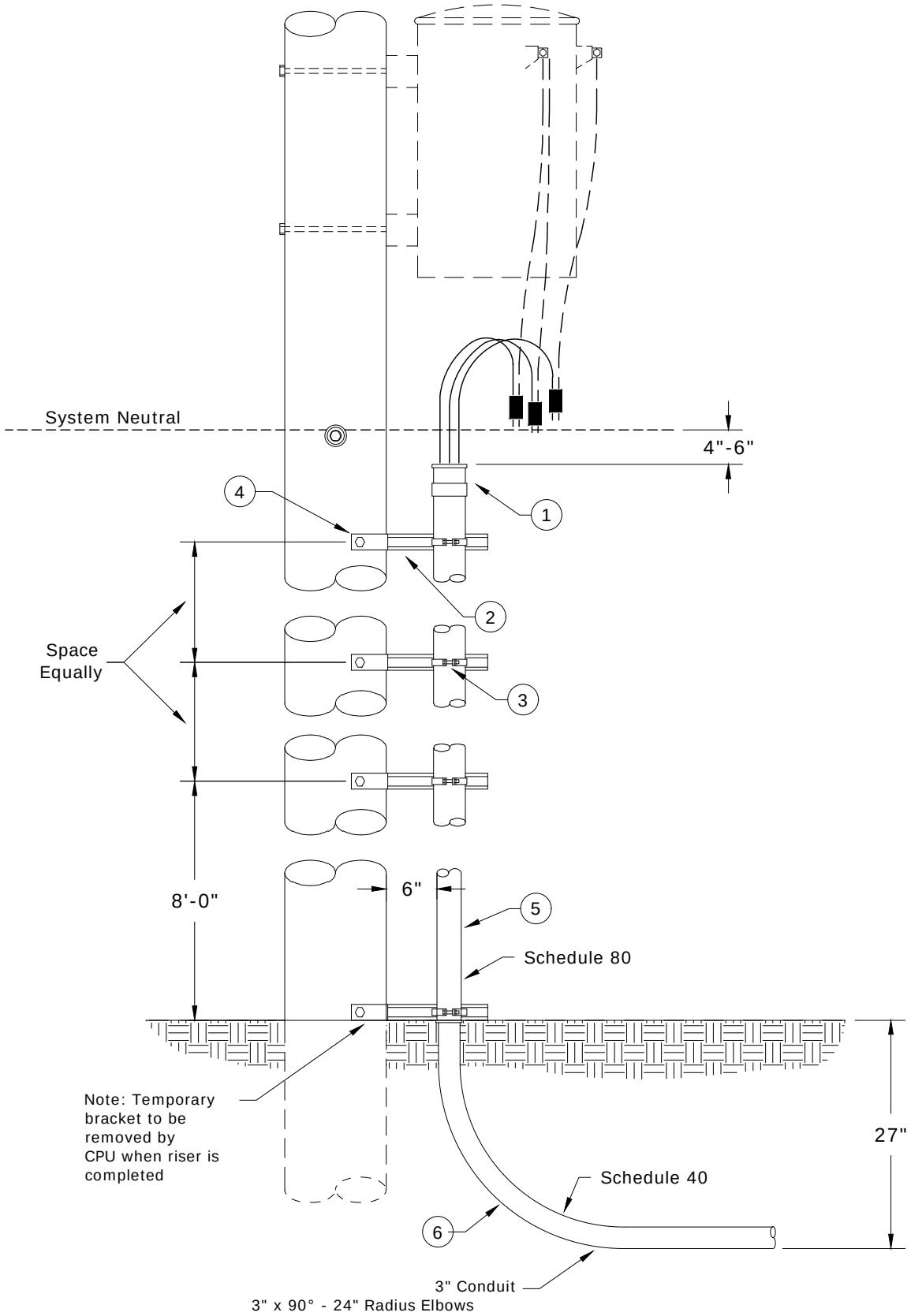

Rev 3: Secondary depth corrected for 24" of burial depth per NESC 2023

Clark Public Utilities

CONSTRUCTION STANDARDS

SECONDARY OVERHEAD TO UNDERGROUND RISER ASSEMBLY

REVISIONS

R	DATE	ENGR	OPS
1	5/30/07	LB	AH
2	6/8/18	KJP	
3	2/11/25	CSB	

PAGE: 1 of 2

U83,U84

CAD FILE: U83

APP: KJP

DATE: 12/29/04

SECTION 1300

Rev 2: Material corrections.

ITEM NO.	DESCRIPTION	U83	
		QTY.	S/N
1	End Bell, 3", Sch 40	1	2317
2	Bracket, Standoff Riser 10 1/2"	3	226
3	Clamp, Standoff Bracket, 3" Conduit	3	296
4	Screw, Lag 1/2" X 3", Fetter Drive, Drive Point	6	1131
5	Conduit, PVC, 3" x 10', Sch 80	30	2313
6	Elbow, PVC, 3", 90°, 24" Radius, Sch 40	1	2574

ITEM NO.	DESCRIPTION	U84	
		QTY.	S/N
1	End Bell, 4", Sch 40	1	2204
2	Bracket, Standoff Riser 10 1/2"	3	226
3	Clamp, Standoff Bracket, 4" Conduit	3	297
4	Screw, Lag 1/2" X 3", Fetter Drive, Drive Point	6	1131
5	Conduit, PVC, 4" x 10', Sch 80	30	2203
6	Elbow, PVC, 4", 90°, 24" Radius, Sch 40	1	1536

Clark Public Utilities

CONSTRUCTION STANDARDS

SECONDARY OVERHEAD TO
UNDERGROUND RISER ASSEMBLY

REVISIONS

R	DATE	ENGR	OPS
1	5/30/07	LB	AH
2	6/8/18	KJP	

PAGE: 2 of 2

U83,U84

CAD FILE: U83

APP: KJP

DATE: 12/29/04

SECTION 1300

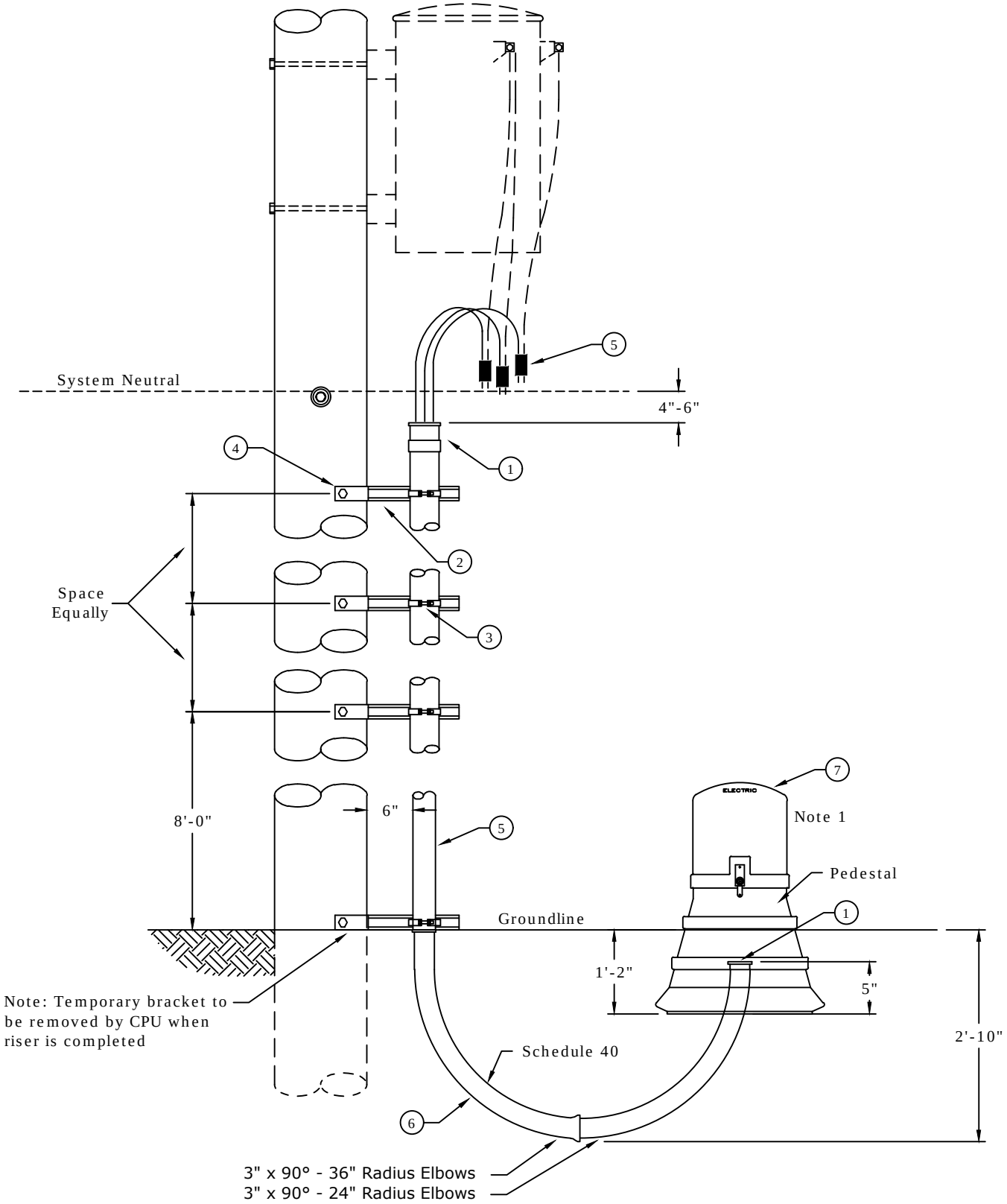

Note: Direction of the pedestal will be determined by the CPU Engineer.

Rev 4: Material corrections.

Clark Public Utilities

CONSTRUCTION STANDARDS

SECONDARY OVERHEAD TO
UNDERGROUND RISER ASSEMBLY
W/ SECONDARY PEDESTAL

REVISIONS

R	DATE	ENGR	OPS
1	4/26/04	LB	AH
2	12/29/04	LB	AH
3	12/14/09	KJP	
4	10/6/14	KJP	

PAGE:		CAD FILE:	APP:	SECTION
1 of 2	U8P	U8P	DATE: 1/80	1300

Rev 4: Material corrections.

ITEM NO.	DESCRIPTION	U8P QTY.	U8P S/N
1	End Bell, 3", Sch. 40	2	2317
2	Bracket, Standoff Riser 10-1/2" U.G.	3	226
3	Clamp, Standoff Bracket, 3"	3	296
4	Screw, Lag 1/2" X 3"	6	1131
5	Connector	3	as req*
6	Conduit, PVC, Sch 80, 3" x 10'	30✡	2313
7	Pedestal, Secondary, Aboveground W/ Connectors and Covers	1	2562
8	350MCM AL Triplex UG Secondary	40	362
9	Elbow, PVC, 3", 90°, 24" Radius, Sch. 40 Straight	1	2713
10	Elbow, PVC, 3", 90°, 36" Radius, Sch. 40	1	1534

Clark Public Utilities

CONSTRUCTION STANDARDS

SECONDARY OVERHEAD TO
UNDERGROUND RISER ASSEMBLY
W/ SECONDARY PEDESTAL

REVISIONS

R	DATE	ENGR	OPS
1	4/26/04	LB	AH
2	12/29/04	LB	AH
3	12/14/09	KJP	
4	10/6/14	KJP	

PAGE: 2 of 2

U8P

CAD FILE: U8P

APP:

DATE: 1/80

SECTION 1300

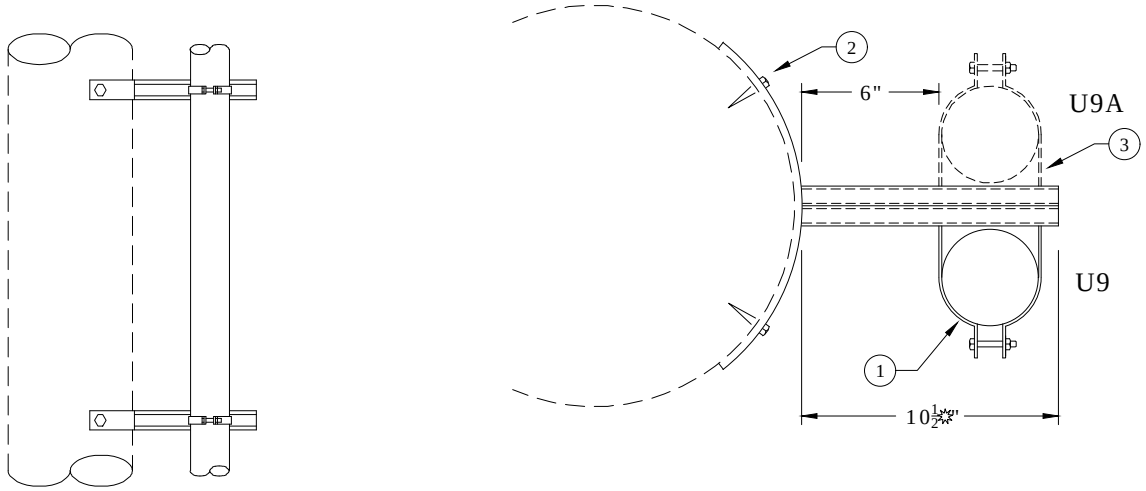

Rev 3: Corrected drawing and material list to 10 1/2" standoff riser bracket.

ITEM NO.	DESCRIPTION	U9 QTY.	U9 S/N
1	Clamp, Standoff Bracket 4"	2	297
2	Screw, Lag 1/2" x 4-1/2"	4	1132
3	Bracket, Standoff Riser 10-1/2" ✲	2	226

ITEM NO.	DESCRIPTION	U9A QTY.	U9A S/N
1	Clamp, Standoff Bracket 4"	2	297

ITEM NO.	DESCRIPTION	U9B QTY.	U9B S/N
1	Clamp, Standoff Bracket 2"	2	295
2	Screw, Lag 1/2" x 4-1/2"	4	1132
3	Bracket, Standoff Riser 10-1/2" ✲	2	226

ITEM NO.	DESCRIPTION	U9C QTY.	U9C S/N
1	Clamp, Standoff Bracket 2"	2	295

Clark Public Utilities

CONSTRUCTION STANDARDS

RISER BRACKET ASSEMBLY

REVISIONS

R	DATE	ENGR	OPS
1	2/23/00	HWH	MA
2	7/15/02	JEH	TR
3	12/14/09	KJP	

PAGE: 1 of 1

U9

CAD FILE: U9

APP:

DATE: 2/3/82

SECTION 1300

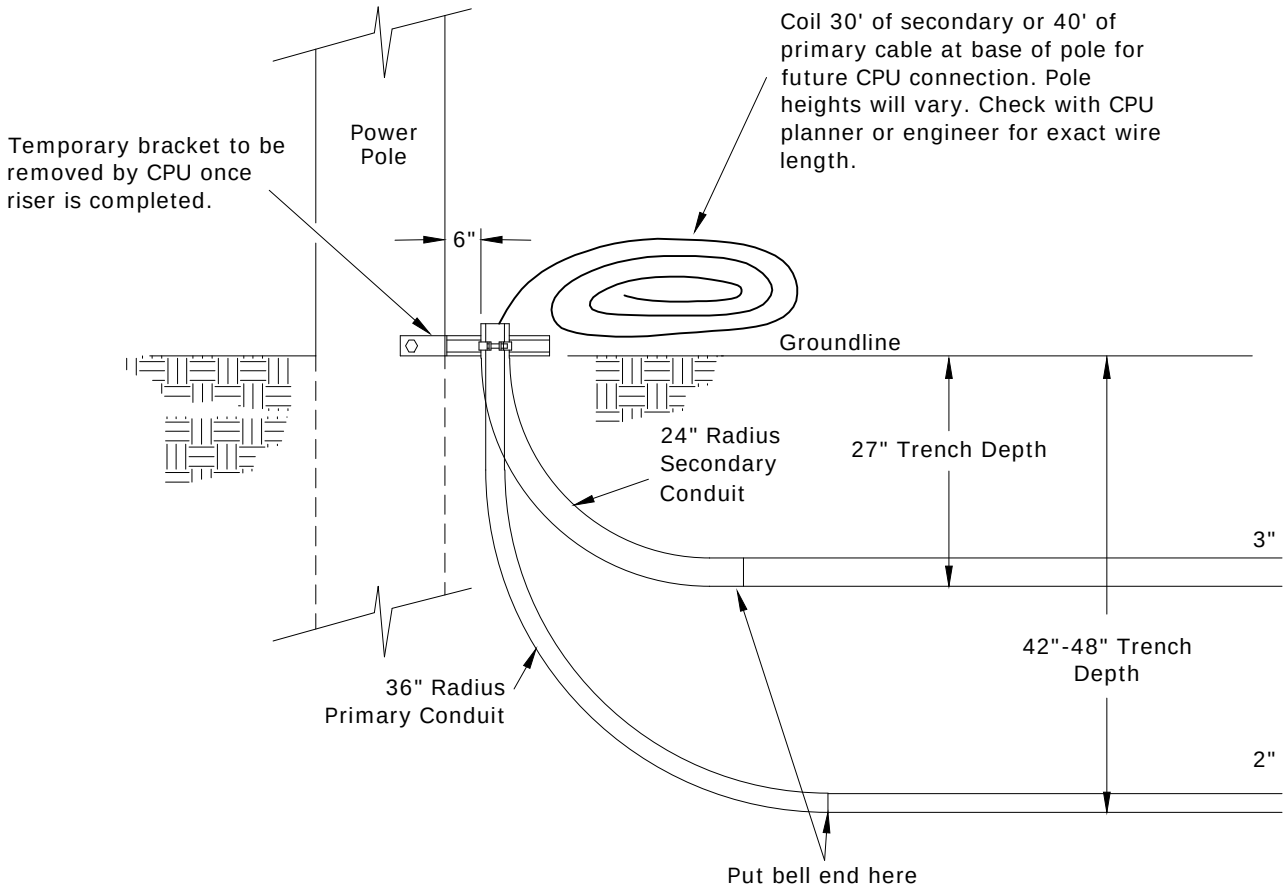

Rev. 2 - Corrected secondary trench depth

Clark Public Utilities

CONSTRUCTION STANDARDS

1Ø PRIMARY (U1) & SECONDARY (U8) RISER GUIDELINES

REVISIONS

R	DATE	ENGR	OPS
1	12/29/04	LB	AH
2	2/11/25	CM	GM

PAGE: 1 of 2

U10

CAD FILE: U10

APP:

DATE: 8/00

SECTION 1300

STANDOFF BRACKET PLACEMENT

1) Basic Rule: On poles without anchors or existing clean poles, 1Ø primary and secondary riser brackets should be installed on the "belly button" side of the pole. Typically, a transformer would also be installed on the "belly button" side above the 1Ø primary or secondary riser.

2) For poles with an existing riser, USE the EXISTING brackets that are installed to maintain climbing space.

3) On poles with an existing transformer or transformer bank, the bracket should be installed under the transformer or center transformer on a bank away from street side. If the existing transformer is located on the opposite side of the "belly button," place the bracket under the transformer.

4) Standoffs are typically not installed under guy wires no matter where the "belly button" is located.

5) Standoffs and risers should be placed to avoid conflict with overhead communication wires and guy wires.

6) Talk to construction reliability inspector or construction superintendent if questions arise on standoff placement.

Tangent Standoff Bracket U1, U3

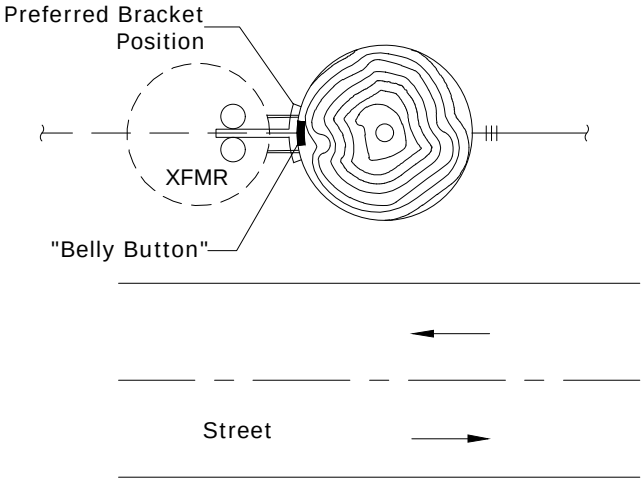

Deadend Standoff Bracket (U1, U3)

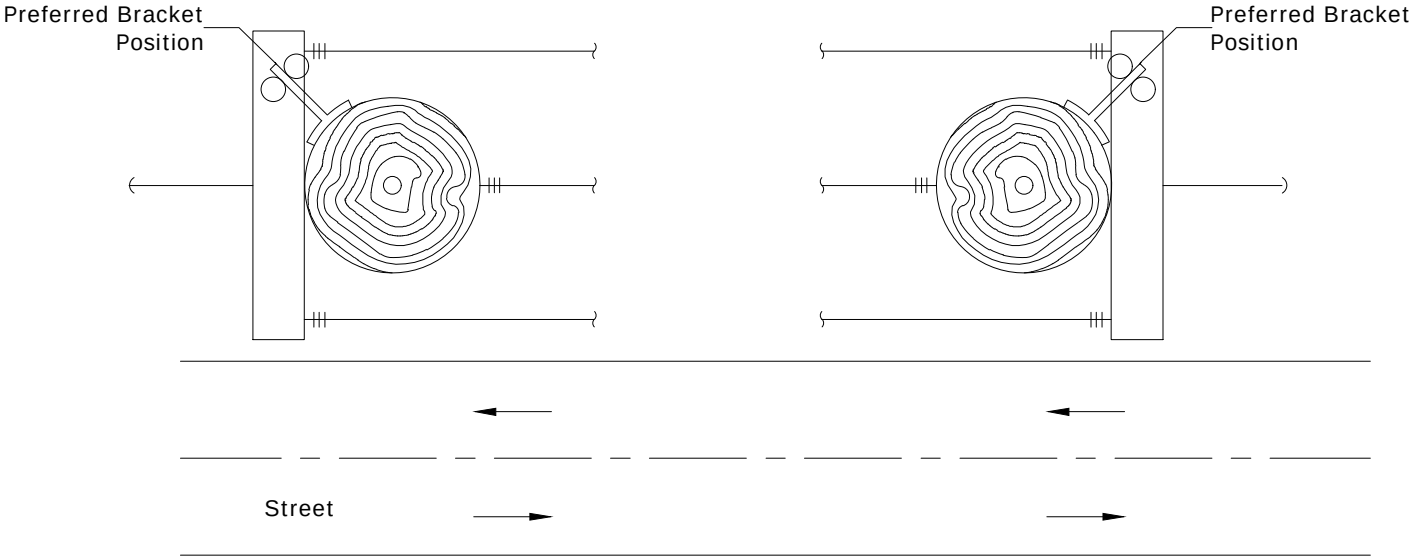

Rev. 2 - Re-designed to remove alternate bracket positions and show deadend configurations. Updated notes 2 & 3 and 6.

Clark Public Utilities

CONSTRUCTION STANDARDS

1Ø PRIMARY (U1) & SECONDARY (U8) RISER GUIDELINES

REVISIONS

R	DATE	ENGR	OPS
1	12/29/04	LB	AH
2	2/11/25	CM	GM

PAGE: 2 of 2

U10

CAD FILE: U10

APP:

DATE: 8/00

SECTION 1300

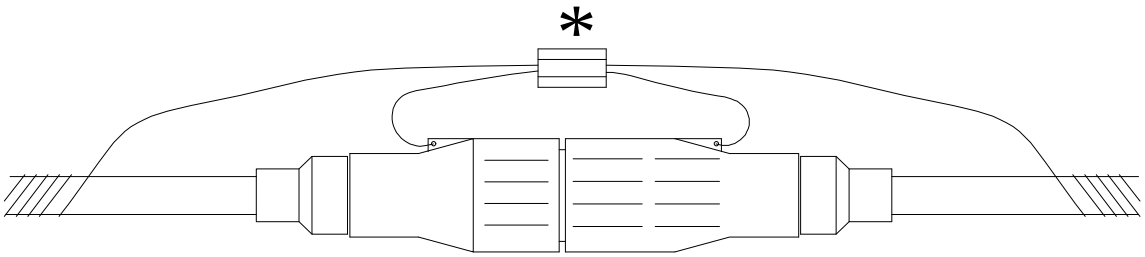

ITEM	MATERIAL DESCRIPTION	S/N
UB20	SPLICE, KIT S 15KV UG 2 AWG	1206

* NOTE: CONST SPEC. NO. UB20 & UB21 INCLUDE CONNECTOR, CRIMPET YC4C4

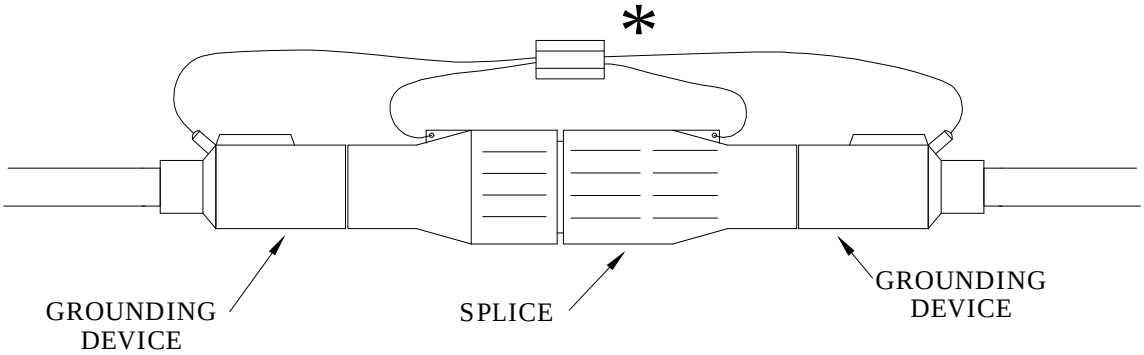

ITEM	MATERIAL DESCRIPTION	S/N
UB22	SPLICE, KIT S 15KV UG 1000 MCM	1210
UB23	DEVICE, GROUNDING, 1000 MCM (FOR TAPE SHIELD ONLY)	608

* NOTE: CONST SPEC. NO. UB22 & UB23 INCLUDE CONNECTOR, CRIMPET YC4C4

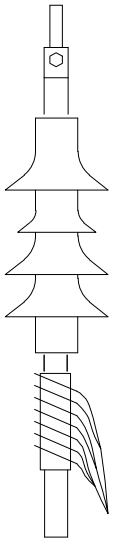

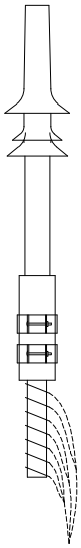

ITEM	MATERIAL DESCRIPTION	S/N	ITEM	MATERIAL DESCRIPTION	S/N
UB22	TERMINATOR, OUTDOOR MOLDED RUBBER, #2, 200A	1305	UB26	TERMINATOR, OUTDOOR BUTYL, 1000 MCM, 600A	2225
UB23	TERMINATOR, OUTDOOR MOLDED RUBBER, 1/0, 200A	2214			

Clark Public Utilities

CONSTRUCTION STANDARDS

UNDERGROUND PRIMARY
BASIC UNITS

REVISIONS

R	DATE	ENGR	OPS
0	6/14/02		

0 REDRAWN IN CAD

PAGE: 1 of 1

UB20-UB26

CAD FILE: UB20-UB26

APP: ELM
DATE: 1/31/80

SECTION 1300

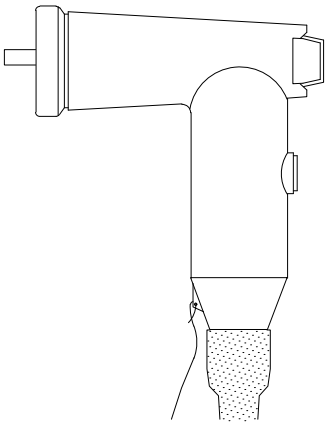

MATERIAL LIST

UCA1,UCA2

ITEM	QTY.	DESCRIPTION	SIN
UCA1	1	TERMINATOR, ELBOW L.B. 1/0 220MIL ONLY	2186
UCA2	1	TERMINATOR, ELBOW L.B. 1/0 OR 2AL EXCEPT 1/0 220MIL ONLY	1312

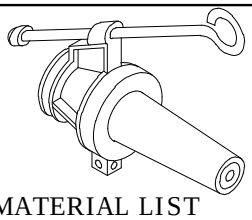

MATERIAL LIST

UCA3

ITEM	QTY.	DESCRIPTION	SIN
UCA3	1	BUSHING, STANDOFF INSUL, 200A	252

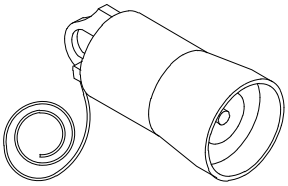

MATERIAL LIST

UCA4

ITEM	QTY.	DESCRIPTION	SIN
UCA4	1	CAP, PROTECTIVE GRD. 200A	265

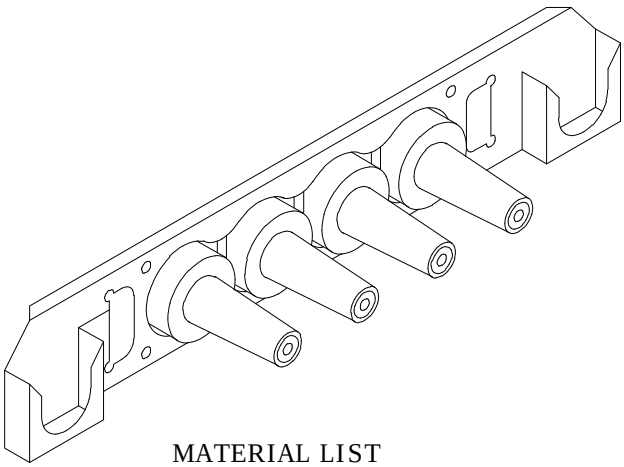

MATERIAL LIST

UCA5,UCA6

ITEM	QTY.	DESCRIPTION	SIN
UCA5	1	MODULE 4 POSITION W/ BRACKET	900
UCA6	1	MODULE 4 POSITION W/O BRACKET	901

Clark Public Utilities

CONSTRUCTION STANDARDS

UNDERGROUND PRIMARY
CABLE ACCESSORIES
200A

REVISIONS

R	DATE	ENGR	OPS
0	2/23/00	HWH	MA

0

PAGE: 1 of 1

UCA1-UCA6

CAD FILE: UCA1

APP:

DATE: 9/94

SECTION 1300

HOW TO HANDLE CABLE REELS

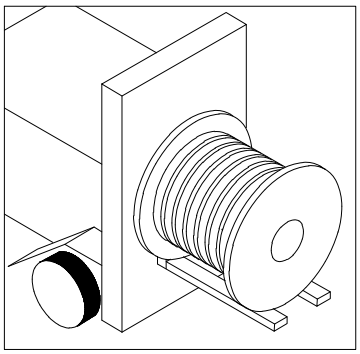

CRADLE BOTH REEL FLANGES BETWEEN FORKS.

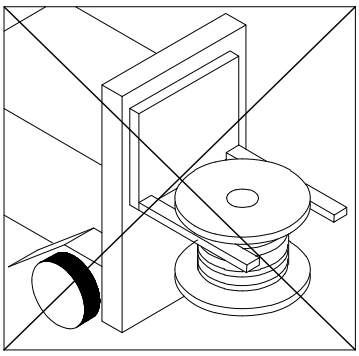

DO NOT LIFT BY TOP FLANGE. CABLE OR REEL WILL BE DAMAGED.

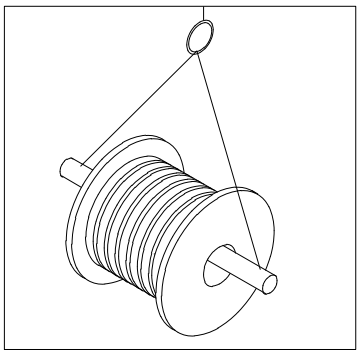

REELS CAN BE HOISTED WITH A SHAFT EXTENDING THROUGH BOTH FLANGES.

← YES

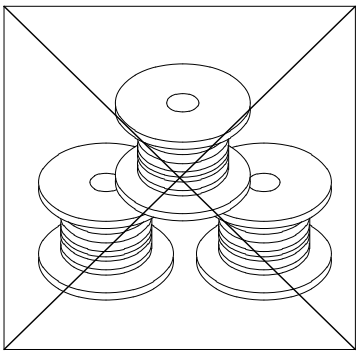

UPENDED HEAVY REELS WILL OFTEN ARRIVE DAMAGED. REFUSE OR RECEIVE SUBJECT TO INSPECTION FOR HIDDEN DAMAGE.

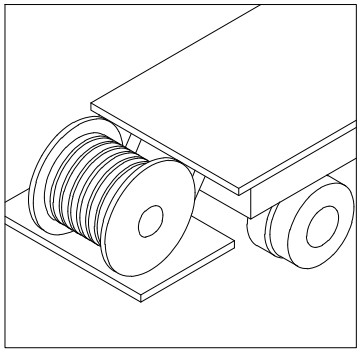

LOWER REELS FROM TRUCK USING HYDRAULIC GATE, HOIST OR FORK LIFT. (LOWER CAREFULLY)

NO →

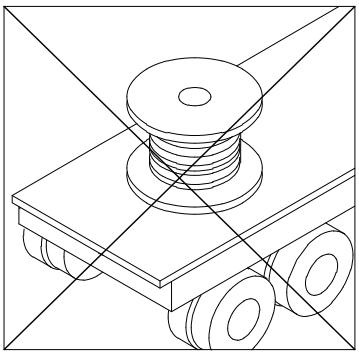

DO NOT UPEND REELS

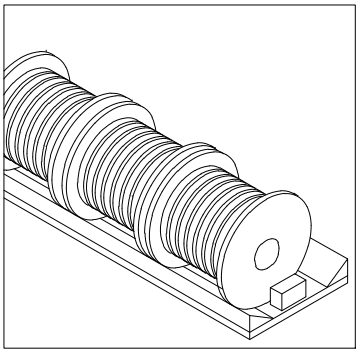

ALWAYS LOAD WITH FLANGES ON EDGE AND CHOCK AND BLOCK SECURELY.

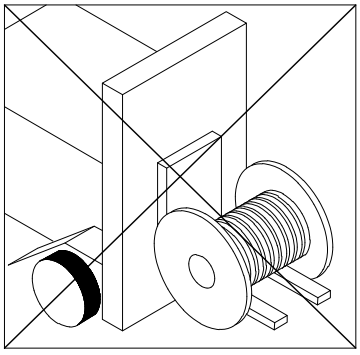

NEVER ALLOW FORKS TO TOUCH CABLE SURFACE OR REEL WRAP.

Clark Public Utilities

CONSTRUCTION STANDARDS

UNDERGROUND CABLE
REEL HANDLING

REVISIONS

R	DATE	ENGR	OPS
0	2/23/00	HWH	MA

0

PAGE: 1 of 2

UCH-0

CAD FILE: UCH-0

APP:

DATE: 9/94

SECTION 1300

HOW TO HANDLE CABLE REELS

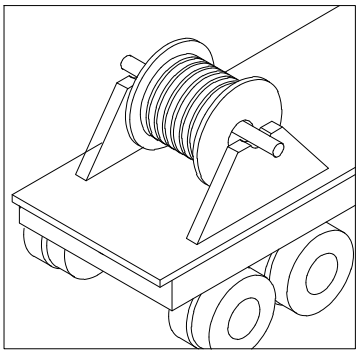

REELS GOING TO JOBS SHALL ALWAYS BE MOUNTED ON A HORIZONTAL AXLE.

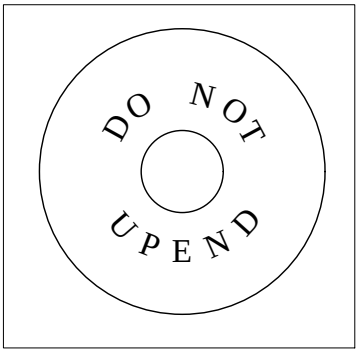

THIS SIGN APPLIES FOR ANY REEL HANDLING. NOT JUST FACTORY DELIVERY.

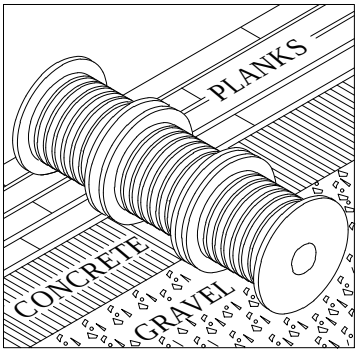

ALWAYS STORE REELS ON A HARD SURFACE.

← YES

NO →

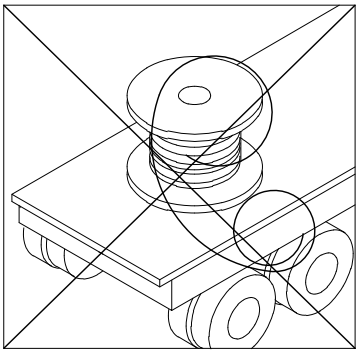

NEVER REMOVE CABLE FROM A REEL THIS WAY. IT WILL KINK.

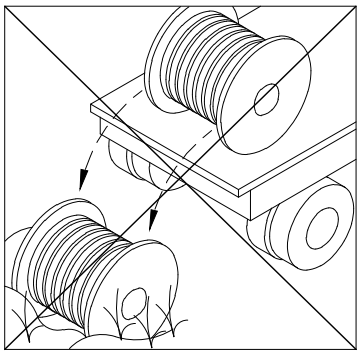

NEVER DROP A CABLE REEL FROM ANY HEIGHT WITH EVEN A SMALL AMOUNT OF CABLE ON THE REEL.

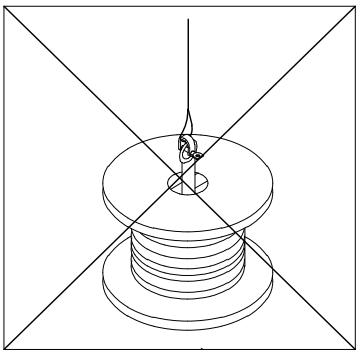

NEVER USE A SWIVEL TO REMOVE CABLE FROM A REEL.

Clark Public Utilities

CONSTRUCTION STANDARDS

UNDERGROUND CABLE
REEL HANDLING

REVISIONS			
R	DATE	ENGR	OPS
0	2/23/00	HWH	MA
0			

PAGE:		CAD FILE:	APP:	SECTION
2 of 2	UCH-0	UCH-0	DATE: 9/94	1300

MOVEMENT, STORAGE, AND HANDLING OF CABLE

MOVEMENT OF REELS OF CABLE

1. REELS OF CABLE MUST NOT BE DROPPED FROM ANY HEIGHT, PARTICULARLY FROM TRUCKS OR OTHER TRANSPORTING EQUIPMENT.

2. LIFT REELS USING FOLLOWING METHODS:

   A) CRANE OR BOOM TYPE EQUIPMENT--INSERT SHAFT (HEAVY ROD OR PIPE) THROUGH REEL HUBS AND LIFT WITH SLINGS ON SHAFT, PREFERABLY UTILIZING SPREADER OR YOKE TO REDUCE OR AVOID SLING PRESSURE AGAINST REEL HEAD.

   B) FORK LIFT TYPE OF EQUIPMENT MAY BE USED TO MOVE SMALLER, NARROWER WIDTH REELS. FORK TINES SHALL BE PLACED SO THAT LIFT PRESSURE IS ON REEL HEADS, NOT ON CABLE, AND MUST REACH ALL THE WAY ACROSS REELS SO LIFT IS AGAINST BOTH REEL HEADS.

3. REELS MAY BE MOVED SHORT DISTANCES BY ROLLING. REELS SHOULD BE ROLLED IN THE DIRECTION INDICATED BY ARROWS PAINTED ON REEL HEADS. SURFACES OVER WHICH THE REELS ARE TO BE ROLLED SHALL BE FIRM, CLEAR OF DEBRIS, AND ALSO CLEAR OF PROTRUDING STONES, HUMPS, ETC. WHICH MIGHT DAMAGE THE CABLE IF THE REEL STRADDLED THEM.

STORAGE OF REELS OF CABLE

1. CABLE ENDS ARE SEALED PRIOR TO SHIPMENT, IF FACTORY SEALS ARE CUT OFF, NEW SEALS MUST BE APPLIED TO PREVENT MOISTURE ENTRY INTO CABLE.

2. WHENEVER POSSIBLE, THE FACTORY APPLIED PROTECTIVE COVER SHOULD BE LEFT IN PLACE UNTIL REMOVAL IS ABSOLUTELY NECESSARY. ADDITIONAL COVERING SUCH AS TARPAULIN, PLASTIC SHEETING, ETC., MAY BE USED IF CABLE IS TO BE STORED FOR LONG PERIODS OUTDOORS OR IN EXCESSIVELY DIRTY, DUSTY AREAS.

3. STORE REELS OF CABLE ON A FIRM SURFACE, PAVED IF POSSIBLE, OR ON PLANKING TO PREVENT SETTLING INTO SOFT GROUND.

4. THE STORAGE AREAS SHALL HAVE GOOD DRAINAGE.

5. USE FENCING OR OTHER BARRIERS TO PROTECT CABLES AND REELS AGAINST DAMAGE BY VEHICLES OR OTHER EQUIPMENT MOVING ABOUT IN THE STORAGE AREA.

6. NEVER STORE REELS ON END.

HANDLING DURING INSTALLATION

1. COLD WEATHER HANDLING AND PULLING-IN CABLE CAN BE MORE DIFFICULT, DEPENDING ON THE CABLE CONSTRUCTION AND INSTALLATION LOCATION. COLD-INDUCED STIFFNESS OF CABLE MUST BE CONSIDERED ALONG WITH RADIUS AND NUMBER OF BENDS IN THE PROPOSED INSTALLATION RUN.

   IN GENERAL MOST CABLES CAN BE SAFELY HANDLED WITHOUT DAMAGE IF NOT SUBJECTED TO TEMPERATURE LOWER THAN 10°F (-12°C) IN THE 24 HOUR PERIOD PRECEDING PULLING AND BENDING. IF IT IS ANTICIPATED THAT STORE TEMPERATURES WILL BE BELOW THIS LEVEL DURING THE 24 HOUR PRE-PULL PERIOD, ARRANGEMENTS SHOULD BE MADE TO MOVE THE REEL, AVOIDING IMPACT, TO A WARMER AREA. IF NO INDOOR WARMING AREA IS AVAILABLE, A PLASTIC SHEETING-COVERED SHELTER MAY BE CONSTRUCTED AND HEATED. THE REEL SHOULD BE HELD IN THE WARM STORAGE AREA AT A TEMPERATURE OF AT LEAST 60°F (16°C) FOR 24 HOURS TO ENSURE TOTAL WARMUP. APPLY PULLING EYES OR GRIPS WHILE CABLE IS IN THE WARMING AREA, PRIOR TO MOVEMENT OUTDOORS OR UNCOVERING.

2. FACTORY APPLIED SEALS ON CABLE ENDS MAY BE DISRUPTED DURING THE PULLING OPERATIONS AND, THEREFORE, SHOULD BE CHECKED AND REPLACED IF THE CABLES ARE NOT GOING TO BE SPLICED OR TERMINATED RIGHT AFTER PULL-IN. THIS IS ESPECIALLY IMPORTANT FOR UNDERGROUND RUNS WHERE CABLE ENDS MAY BE LEFT IN ENCLOSURES WHICH ARE SUBJECT TO FLOODING.

3. THE CABLES SHOULD BE LAID INTO THE TRENCH BEING CAREFUL NOT TO TWIST OR KINK THEM. CARE SHOULD BE TAKEN NOT TO ABRADE OR IMPACT THE CABLE SURFACE AS IT LEAVES THE PAY-OFF EQUIPMENT AND ENTERS THE TRENCH. OVER-BENDING THE CABLE TO A POINT LESS THAN THE RECOMMENDED MINIMUM BENDING RADIUS ALSO SHALL BE AVOIDED. CABLES CAN BECOME EASILY OVER-BENT AT GUIDE POINTS SUCH AS SMALL SHEAVES OR ROLLERS LOCATED ON THE CABLE LAYING EQUIPMENT.

   AFTER LAYING THE CABLES INTO THE TRENCH, THEY SHOULD BE COVERED WITH A LAYER OF SELECTED BACKFILL TO A LEVEL OF APPROXIMATELY THREE TO FOUR INCHES ABOVE THE CABLES' SURFACES. "SELECTED BACKFILL" IS DEFINED AS EITHER THERMAL SAND OR SAND-CLAY-GRAVEL MIXTURE CONTAINING SOME SMALL STONES NO GREATER IN SIZE THAN ONE-QUARTER TO ONE-HALF INCH ACROSS AT THEIR LARGEST DIMENSION.

FOLLOWING ARE THE MINIMUM REQUIREMENTS FOR ANY CABLE PULL:

1. THE ENTIRE CONDUIT LENGTH INCLUDING BENDS AND RISERS SHALL BE CLEAN AND SMOOTH. THE TOTAL NUMBER OF ANGLES SHALL NOT EXCEED 270° ✡ WITHOUT PRIOR CPU ENGINEERING APPROVAL.

2. THE ENTIRE CONDUIT LENGTH INCLUDING BENDS AND RISERS SHALL BE SECURED IN THE FINAL LOCATION WITH ALL ACCESSORIES FIRMLY ATTACHED.

3. A PULLING TENSION CALCULATION SHALL BE COMPLETED TO ASSURE THAT MAXIMUM TENSION LIMITS WILL NOT BE EXCEEDED. SEE TABLE 1 FOR LIMITS.

4. SUFFICIENT APPROVED CABLE LUBRICANT SHALL BE USED AT THE START OF THE PULL.

5. THE CABLE SHALL NEVER BE BENT TO A RADIUS LESS THAN 12 TIMES THE CABLE DIAMETER. ALL SHEAVES SHALL HAVE A GROOVE DIAMETER OF NOT LESS THAN 24 TIMES THE CABLE DIAMETER.

6. NEVER ALLOW CABLE TENSION AT THE CABLE REELS. THE REELS SHALL BE TURNED BY HAND OR BY A POWER DEVICE SO THAT THE CABLE IS SLACK GOING INTO THE CONDUIT ENTRANCE.

7. LUBRICANT SHALL BE APPLIED TO THE CONDUIT BEFORE THE CABLE ENTERS THE CONDUIT. IT MAY BE POURED IN OR A PLASTIC BAG OF LUBRICANT MAY BE ATTACHED TO THE PULLING LINE AHEAD OF THE CABLE.

8. ALL CABLE ENDS SHALL BE SEALED TO PREVENT THE ENTRY OF MOISTURE OR DIRT.

9. FOR 1000 MCM CABLE, THE PULLING LINE SHALL BE 2500 LB, SEQUENTIALLY-NUMBERED, CONTINUOUS MULE TAPE.

10. CABLE ATTACHMENT MAY BE WITH KELLEMS (CABLE OR BASKET) ✡ GRIP OR CONDUCTOR (PULLING EYE) GRIP WHICHEVER THE PULLING TENSION CALCULATION DICTATES.

11. ALL CONDUIT ENTRANCES AND EXITS SHALL HAVE PROTECTIVE BUSHINGS IN PLACE THAT WILL ASSURE THAT CABLE DAMAGE DOES NOT OCCUR DURING THE PULL. AT RISER LOCATIONS, DO NOT GLUE PROTECTIVE BUSHING TO CONDUIT.

12. CABLE PULLING SPEED SHALL NOT EXCEED 50 FEET PER MINUTE.

13. ALL CABLE ENDS SHALL BE EITHER TERMINATED OR SEALED IMMEDIATELY AFTER THE PULL. NO CABLE ENDS SHALL BE LEFT EXPOSED OVER NIGHT OR DURING INCLEMENT WEATHER.

REV 1 - CORRECTIONS MARKED WITH A ✡.

14. IT SHALL BE THE RESPONSIBILITY OF THE DESIGNER TO AVOID UNFAVORABLE SIDEWALL PRESSURES. THE SIDEWALL PRESSURES SHALL BE CALCULATED USING THE FOLLOWING EQUATIONS:

(A.) THE SIDEWALL PRESSURE (P) IN GENERAL IS DEFINED AS THE TENSION OUT OF A BEND EXPRESSED IN POUNDS DIVIDED BY THE INSIDE RADIUS OF THE BEND EXPRESSED IN FEET. EQUATIONS 1A AND 1B ARE FOR THE "WORST CASE" CABLE.

EQ 1: $P = \frac{T_o}{r}$ (ONE SINGLE CABLE)

1A: $P = \frac{(3c - 2)}{3} \frac{T_o}{r}$ (TWO OR THREE SINGLE CABLES - CRADLE CONFIGURATION) WHERE $c = 1 + \frac{4}{3}\left(\frac{d}{D - d}\right)^2$

1B: $P = \frac{c\,T_o}{2r}$ (TRIANGULAR CONFIGURATION) WHERE $c = \frac{1}{\sqrt{1 - \left(\frac{d}{D - d}\right)^2}}$

P = SIDEWALL PRESSURE, LBS PER FOOT OF RADIUS
T_o= TENSION (LEAVING THE BEND), POUNDS
c = WEIGHT CORRECTION FACTOR (EQ. 7 AND 8)
r = INSIDE RADIUS OF CONDUIT IN FEET
d = CABLE O.D. IN INCHES
D = CONDUIT I.D. IN INCHES

THE MAXIMUM SIDEWALL PRESSURE SHALL NOT EXCEED 500 LB/FT FOR 1 CABLE OR 1000 LB/FT FOR 2 OR 3 CABLES.

TABLE 1
CABLE PULLING LINE TENSION LIMITS

CABLE	KELLEMS (BASKET) GRIP TENSION (POUNDS)	CONDUCTOR (PULLING EYE) GRIP TENSION (POUNDS)
1 - 1/0 PRIMARY	845 ✲	845
2 - 1/0 PRIMARY	845 ✲	845 ✲
3 - 1/0 PRIMARY	1690 ✲	1690
1 - 1000 MCM PRIMARY	1000	5000 ✲
2 - 1000 MCM PRIMARY	1000 ✲	5000 ✲
3 - 1000 MCM PRIMARY	2000	5000 ✲
4/0 - 4/0 - 2/0 SEC.	3000 ✲	4450
350 - 350 - 4/0 SEC.	3000 ✲	5000 ✲

KELLEMS GRIP IS OVER THE CABLE JACKET. ALSO CALLED "CABLE GRIP" OR "BASKET GRIP." ✲
NOTE: 5000 LB LIMIT DUE TO EQUIPMENT LIMITS.

REV 1: CORRECTIONS MARKED WITH A ✲.

Clark Public Utilities

CONSTRUCTION STANDARDS

UNDERGROUND CABLE PULLING REQUIREMENTS

REVISIONS

R	DATE	ENGR	OPS
0	2/23/00	HWH	MA
1	12/29/04	LB	AH

0

PAGE: 2 of 2

UCP1

CAD FILE: UCP-1

APP:

DATE: 9/94

SECTION 1300

TYPICAL ASSEMBLY

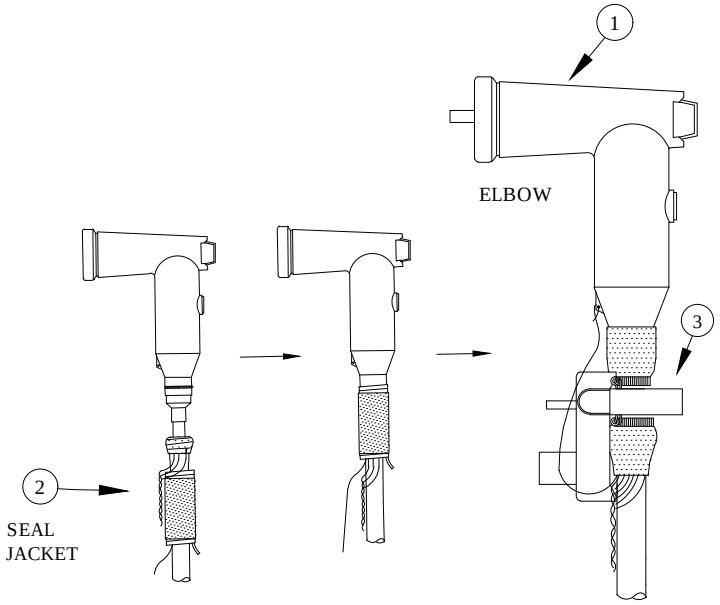

FOR REFERENCE ONLY
OLD INSTALLATIONS WITHOUT VOLTAGE-TEST POINT
NEW INSTALLATIONS HAVE VOLTAGE-TEST POINT

NOTES:

1. INDIVIDUALLY PACKAGED INSTRUCTIONS COME WITH EACH OF THE THREE MOULDED RUBBER COMPONENTS.
2. THE FAULT INDICATOR SHALL BE INSTALLED AS SHOWN. NEUTRAL WIRES MUST BE TRAINED AS SHOWN SO THAT THE FAULT INDICATOR WILL FIT.

Rev 3: Added Current-Reset fault indicator to title and made "Reference Only."

ITEM NO.	DESCRIPTION	UEP2	
		QTY.	S/N
1	Elbow, Loadbreak, 1/0, 200A, 175 MIL	1	1312
2	Kit, Cable Sealing, 15KV, 200A	1	2391
3	Fault Indicator, Current-reset, 400A, 1Ø UG	1	2581

Clark Public Utilities

CONSTRUCTION STANDARDS

PRIMARY ELBOW ASSEMBLY
200A WITH
CURRENT-RESET FAULT INDICATOR

REVISIONS

R	DATE	ENGR	OPS
0	2/23/00	HWH	MA
1	9/23/04	LB	AH
2	8/2/05	LB	AH
3	4/29/09	CM	AH

PAGE: 1 of 1

UEP2

CAD FILE: UEP2

APP:

DATE: 9/94

SECTION 1300

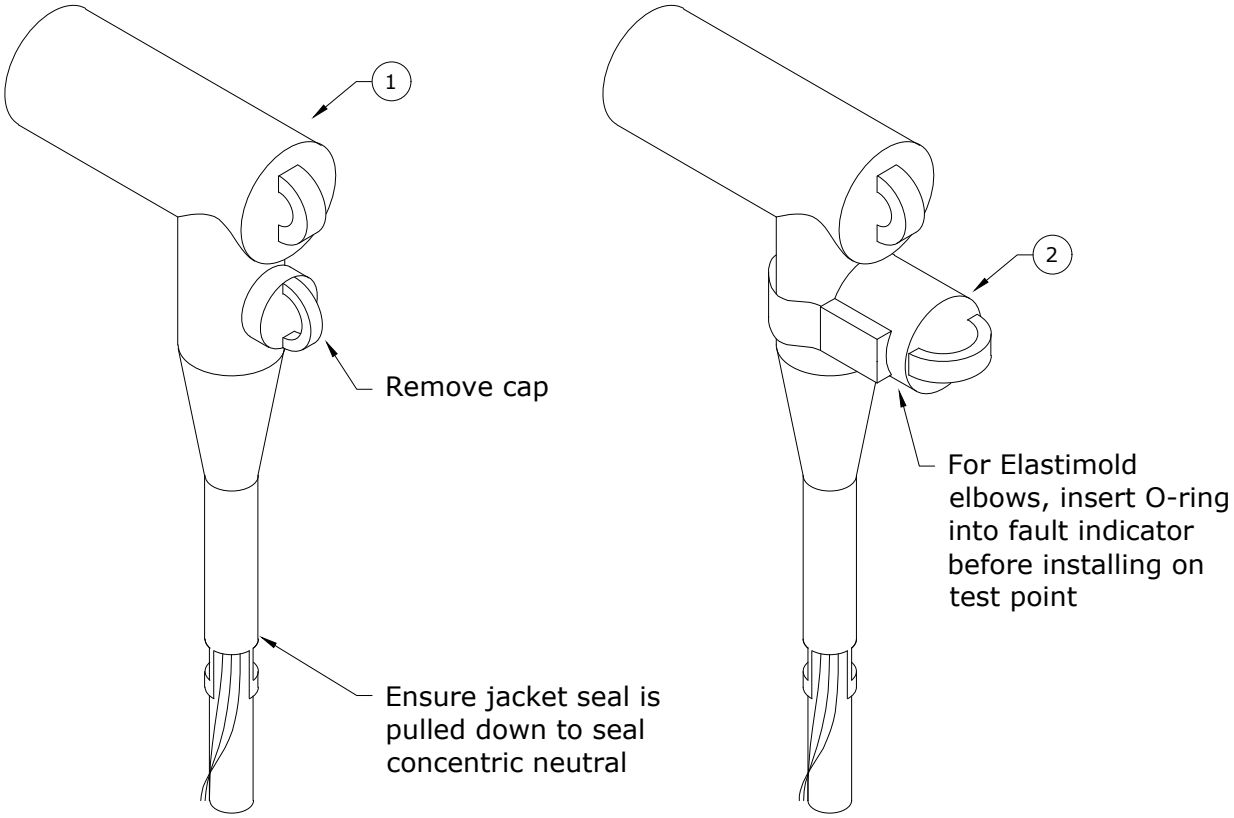

Note: Follow manufacturer's cutbacks and use template provided. Do NOT use a metal tape measure.

Rev. 1 - Changed to elbow with integrated jacket seal.

ITEM NO.	DESCRIPTION	UEP3 QTY.	UEP3 S/N
1	Elbow, 200A, LB, 1/0, 175 & 220 mil, Test Point, 15 kV, Integrated Jacket Seal	1	1312
2	Fault Indicator, Voltage-reset, 400A Trip, 1Ø UG	1	2694

Clark Public Utilities

CONSTRUCTION STANDARDS

PRIMARY ELBOW ASSEMBLY
200A WITH
VOLTAGE-RESET FAULT INDICATOR

REVISIONS

R	DATE	ENGR	OPS
1	11/19/20	CM	GM

PAGE: 1 of 1

UEP3

CAD FILE: UEP3

APP: CM/AH
DATE: 4/29/09

SECTION 1300

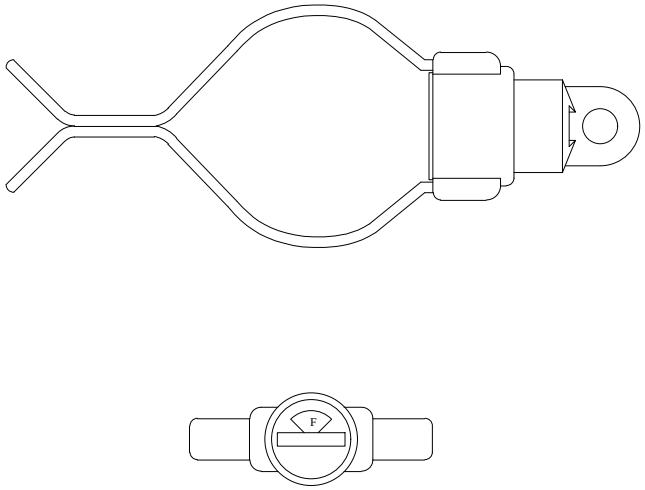

S/N# 2694 - VOLTAGE-RESET FLAG INDICATION
USE: 1Ø AND 3Ø PADMOUNT TRANSFORMERS AND J-BOXES (1/0 CABLE)
TRIP CURRENT: 400A
RESET VOLTAGE AND TIME: 5KV (UP TO 4 MIN.)
SEE: UT21-UT22, UT24-UT28, UT30-UT32, UJ1, UJ3, AND UJM

Note: Elastimold elbows (used for Cable Cure) need the ring adapter provided with the fault indicator.

ITEM NO.	DESCRIPTION	UFIV400	
		QTY.	S/N
1	VOLTAGE-RESET FAULT INDICATOR, 400A TRIP, 1Ø UG	1	2694

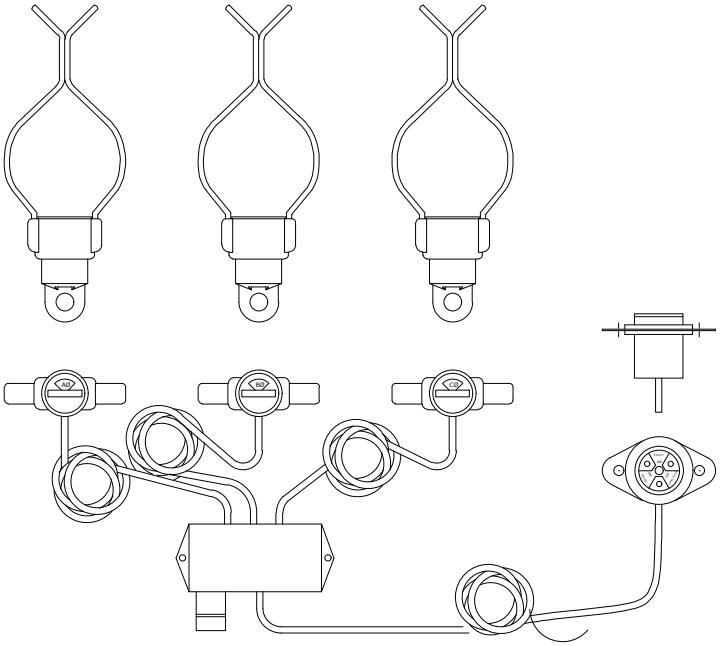

S/N# 2695 - VOLTAGE-RESET FLAG AND BLINKING LIGHT INDICATION
USE: SWITCHGEAR (1000 MCM CABLE)
TRIP CURRENT: 800A
RESET VOLTAGE AND TIME: 5KV (UP TO 4 MIN.) REPLACEABLE BATTERY FOR FLASHING LIGHT
SEE: USG1

Note: Elastimold elbows (used for Cable Cure) need the ring adapter provided with the fault indicator.

ITEM NO.	DESCRIPTION	UFIV800	
		QTY.	S/N
1	VOLTAGE-RESET FAULT INDICATOR, 800A TRIP, 3Ø UG SWG	1	2695

REV 3 - ADDED VOLTAGE-RESET FAULT INDICATORS AND CHANGED FROM "UFI1" TO "UFI"

Clark Public Utilities

CONSTRUCTION STANDARDS

UNDERGROUND
FAULT INDICATORS

REVISIONS

R	DATE	ENGR	OPS
1	2/23/00	HWH	MA
2	9/23/04	LB	AH
3	4/29/09	CM	AH

PAGE: 1 of 2

UFI

CAD FILE: UFI

APP:

DATE: 10/94

SECTION 1300

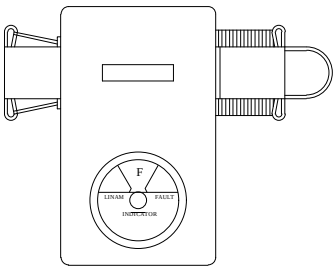

S/N# 2581 - CURRENT RESET-FLAG INDICATION
USE: 1Ø AND 3Ø PADMOUNT TRANSFORMERS AND J-BOXES (1/0 CABLE)
TRIP CURRENT: 400A
RESET CURRENT AND TIME: 1.5A (40 SEC)
SEE: UT21-UT22, UT24-UT28, UT30-UT32, UJ1, UJ3, AND UJM

NOTE: ONLY USE ON ELBOWS WITHOUT A VOLTAGE TEST POINT

ITEM NO.	DESCRIPTION	UFIA400	
		QTY.	S/N
1	INDICATOR, FAULT, CURRENT-RESET, 400A, 1Ø UG	1	2581

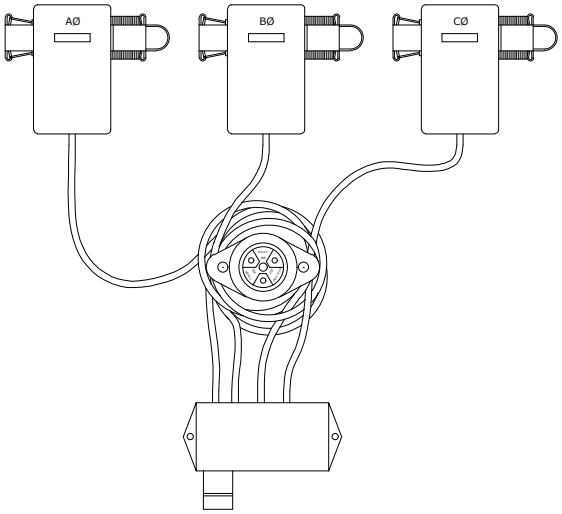

S/N# 2463 - CURRENT RESET-FLAG AND FLASHING LIGHT INDICATION
USE: SWITCHGEAR (1000 MCM CABLE)
TRIP CURRENT: 800A
RESET CURRENT AND TIME: 3A (25 SEC)
REPLACEABLE BATTERY FOR FLASHING LIGHT
SEE: USG1

NOTE: ONLY USE ON ELBOWS WITHOUT A VOLTAGE TEST POINT

ITEM NO.	DESCRIPTION	UFIA800	
		QTY.	S/N
1	INDICATOR, FAULT, CURRENT-RESET, 800A, 3Ø	1	2463

REV 3 - ADDED VOLTAGE-RESET FAULT INDICATORS AND CHANGED FROM "UFI1" TO "UFI"

Clark Public Utilities

CONSTRUCTION STANDARDS

UNDERGROUND
FAULT INDICATORS

REVISIONS

R	DATE	ENGR	OPS
1	2/23/00	HWH	MA
2	9/23/04	LB	AH
3	4/29/09	CM	AH

PAGE: 2 of 2

UFI

CAD FILE: UFI

APP:

DATE: 10/94

SECTION 1300

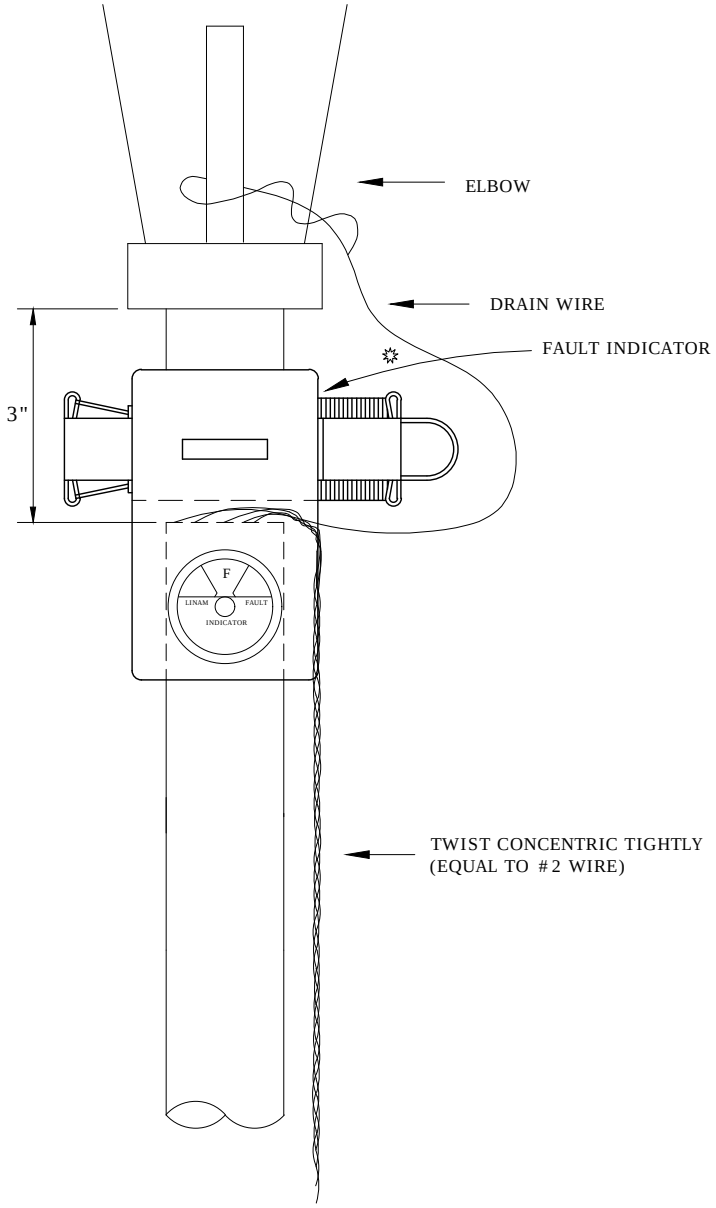

JACKETED
CABLES

NOTES

1. GRAY CLAMP OF FAULT INDICATOR MUST BE ABOVE CONCENTRIC NEUTRAL. IF NOT, INDICATOR WILL NOT WORK.

2. NEUTRALS MUST BE FORMED AS SHOWN SO THAT INDICATOR WILL FIT.

REV 1 - REFLECT JACKETED CABLE - REVISIONS ARE MARKED WITH STAR
REV 2 - CHANGED TO CURRENT-RESET FAULT INDICATOR

Clark Public Utilities

CONSTRUCTION STANDARDS

UNDERGROUND CABLE CURRENT-RESET
FAULT INDICATOR INSTALLATION

REVISIONS

R	DATE	ENGR	OPS
1	2/23/00	HWH	MA
2	9/23/04	LB	AH

1 REVISIONS MARKED WITH STAR

PAGE:		CAD FILE:	APP:	SECTION
1 of 1	UFI2	UFI	DATE: 10/94	1300

Primary

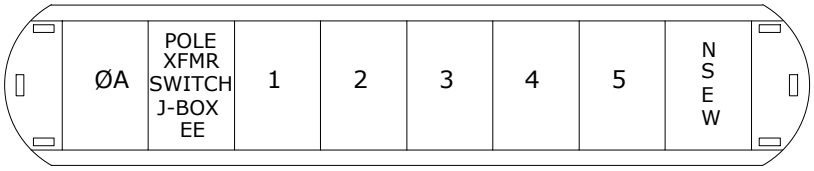

Secondary

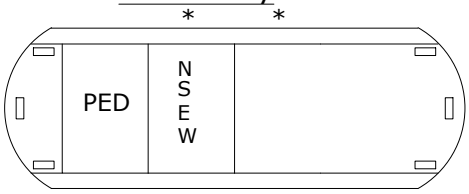

In transformer to secondary pedestal.

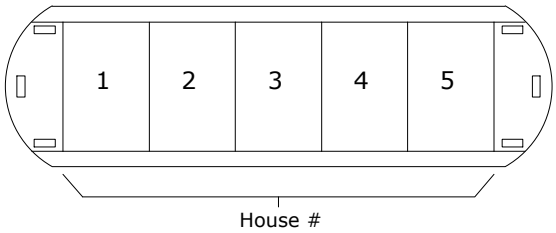

In secondary pedestal to house.

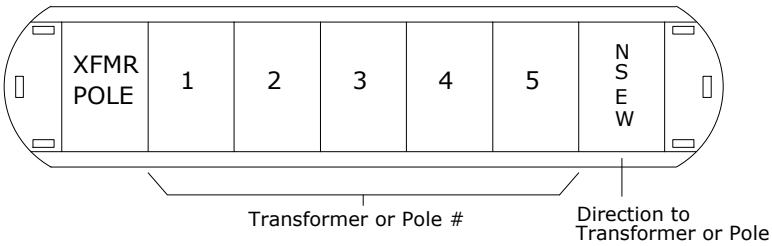

In secondary pedestal from transformer or pole.

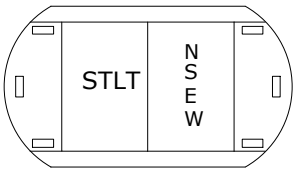

In transformer or pedestal
to streetlight.

Parallel Secondary

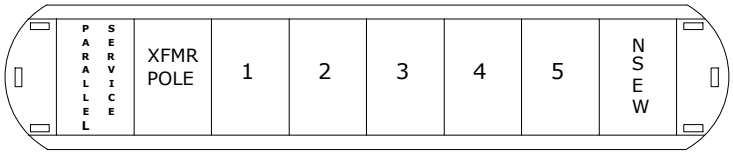

In secondary pedestal from transformer or pole.

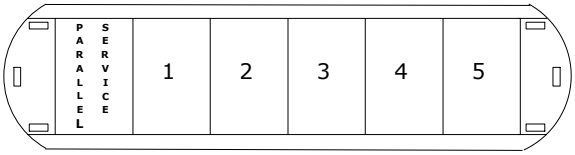

In secondary pedestal to house.

Note: Zip tie ONE tag around each set of parallel cables.

Future Conduits (Normally Will Require Two Tag Holders)

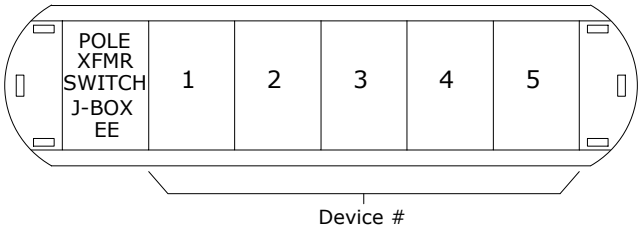

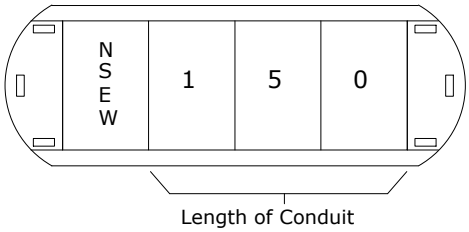

Notes:

1. These tags are for URD primary and secondary cables. Tag all cables.
2. Parallel cables shall have one tag zip tied around both cables.

Rev 4: Added tagging for parallel conductors.

Clark Public Utilities

CONSTRUCTION STANDARDS

UNDERGROUND CONDUCTOR
IDENTIFICATION TAGS

REVISIONS

R	DATE	ENGR	OPS
1	2/23/00	HWH	MA
2	9/23/04	LB	AH
3	1/16/19	KJP	
4	12/9/22	CRM	GM

PAGE: 1 of 1

UID2

CAD FILE: UID2

APP:

DATE: 1/31/80

SECTION 1300

1400
UNDERGROUND TRANSFORMERS

2/11/2025

~	F1A	Fuse Schedule – Padmount Transformers
~	HB16,HB32	Hillside Barrier
~	UID1	Padmounted Equipment Identification Tags & Safety Signs
~	UT2	1Ø Padmount Transformer Radial Feed
~	UT4	Open Y - Open Δ Padmount Transformer Installation
~	UT21,UT22	1Ø Padmount Transformer Assemblies, Loop Feed
~	UT24-UT28	1Ø Pad Xfmr Assembly, Radial or Loop w/ Feed-Thru Bushing
~	UT30-UT32	3Ø Padmount Transformer Assemblies
~	UTB	1Ø Padmount Transformer Boxpad (Basement)
~	UTP1	1Ø Transformer Pad – 25 to 75kVA
~	UTP2	1Ø Transformer Pad – 100kVA
C	UTP3	1Ø Transformer Pad Orientation & Conduit Installation
~	UTP4	3Ø Transformer Pad – 75 to 1500kVA
~	UTP5	Precast Pad & Vault for 3Ø Transformers
C	UTP6	3Ø Transformer Pad Orientation & Conduit Installation
~	UTP9	Typical Barrier Installation to Protect Padmounted Equipment

N New Standard
R Redrawn Standard
C Changed Standard
~ No Change

1ø Padmounted Transformers

kVA	Transformer Stock Number		Transformer Primary Protection			Minimum Upstream OH Fuse Size*2	
	BM 240/120	BR 480/120	Bayonet Fuse No	S/N	Isolation Link*7	Size	S/N
25*1	1317		4000358C05 (8 A)	653	3001861A02	25 A	683
50	1318	2016	4000358C08 (15 A)	654	3001861A03	30 A	684
75	1320		4000358C10 (25 A)	655	3001861A05	65 A	687
100	1322		4000358C10 (25 A)	655	3001861A05	65 A	687

3ø Padmounted Transformers

kVA	Transformer Stock Number		Transformer Primary Protection			Minimum Upstream OH Fuse *2	
	BL 208/120	BW 480/277	Bayonet Fuse No	S/N	Isolation Link*7	Size	S/N
75	1328	1337	4000358C05 (8 A)	653	3001861A02	25 A	683
150	1329	1338	4000358C08 (15 A)	654	3001861A03	30 A	684
300	1331	1340	4000358C10 (25 A)	655	3001861A05	50 A	686
500	1332	1341	4000358C12 (50 A)	656	3001861A06	100 A	689
750	1333	1342	4000358C12 (50 A)	656	3001861A06	100 A	689
1000	1334	1343	4000358C14 (65 A)*3	657	3001861A07	100 A*4	689
1500		1344	4000353C17 (140 A)	658	3001861A05	100 A*4*5	689
					ELSP Fuse*6		
2000✡		2164	4038361C05C (125 A)	2976	CBUC08250D100✡	See Systems Engineering	
2500✡		1345	4038361C05C (125 A)	2976	CBUC08250D100✡		

Spare fuses are kept in each transformer. It is the responsibility of the person using the spare fuse to replace it. Fuses are in free issue.

Notes:

*1 Fuses for 25 kVA livefront transformers are stocked for maintenance only (RTE 476B1, S/N 1664).
*2 Use largest fuse size for applications while considering up/downstream fuses, conductor, and loading. Check with Systems Engineering as needed.
*3 Recommended fuse will result in some loss of overload capability.
*4 Transformer and upstream protection may miscoordinate, therefore each transformer should ideally be on separate feeders/protection.
*5 Fuse will limit overload capability of transformer.
*6 The use of these fuses will provide 175% of rated load for 2 hours and 150% of rated load for 7 hours.
*7 Equivalent Howard isolation link may be substituted for Eaton isolation link. See transformer specifications for P/N.

Rev. 4 - Added note 7 to allow Howard isolation links.

Clark Public Utilities

CONSTRUCTION STANDARDS

FUSE SCHEDULE
PADMOUNT TRANSFORMERS

REVISIONS

R	DATE	ENGR	OPS
1	3/02	DRAWN	IN CAD
2	2/11/10	KJP	
3	7/10/20	KJP	
4	11/30/21	JDK	

PAGE: 1 of 1 | F1A | CAD FILE: F1A | APP: ELM | DATE: 1/31/80 | SECTION 1400

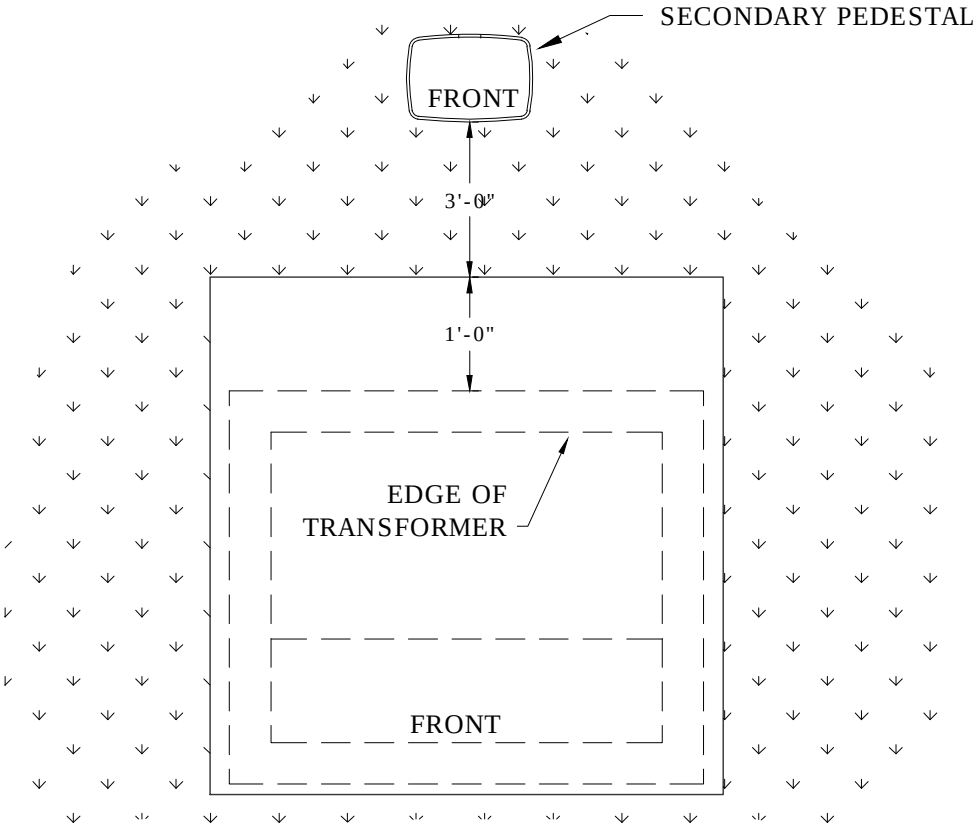

PLAN VIEW

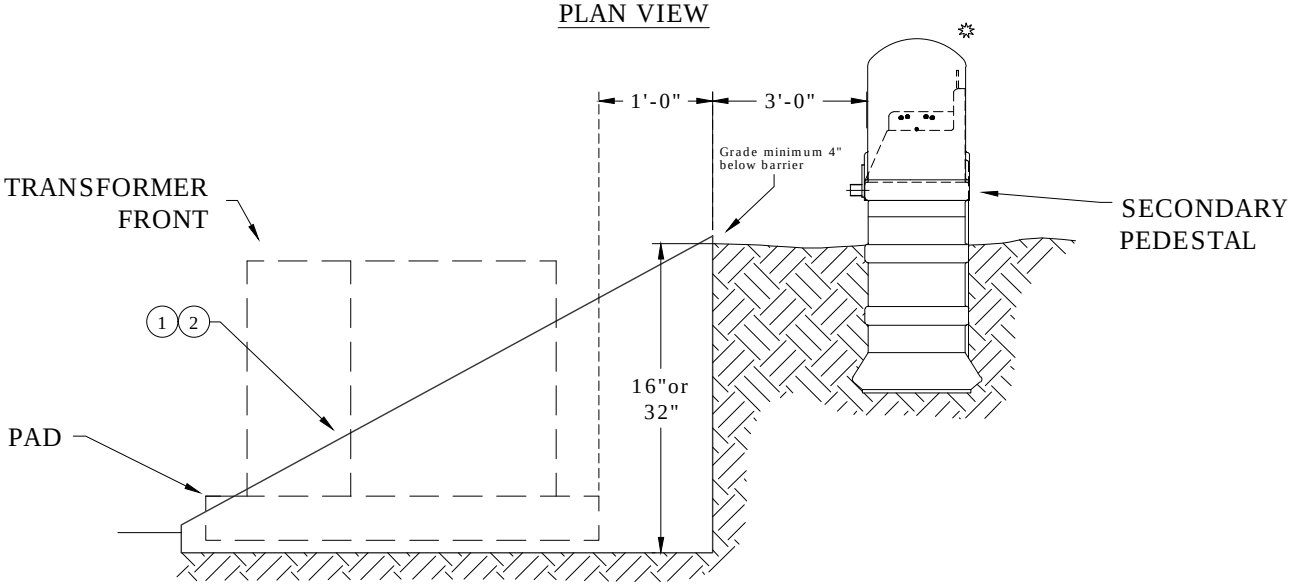

SIDE VIEW

REV 2: Corrected Measurement Behind Pad, and changed title from HB1 to HB16,HB32.

ITEM NO.	DESCRIPTION	HB16		HB32	
		QTY.	S/N	QTY.	S/N
1	BARRIER, 16" Height	1	2460		
2	BARRIER, 32" Height			1	2461

Clark Public Utilities

CONSTRUCTION STANDARDS

HILLSIDE BARRIER

REVISIONS

R	DATE	ENGR	OPS
1	4/26/04	LB	AH
2	5/30/07	LB	AH

PAGE: 1 of 1

HB16,HB32

CAD FILE: HB16

APP:

DATE:

SECTION 1400

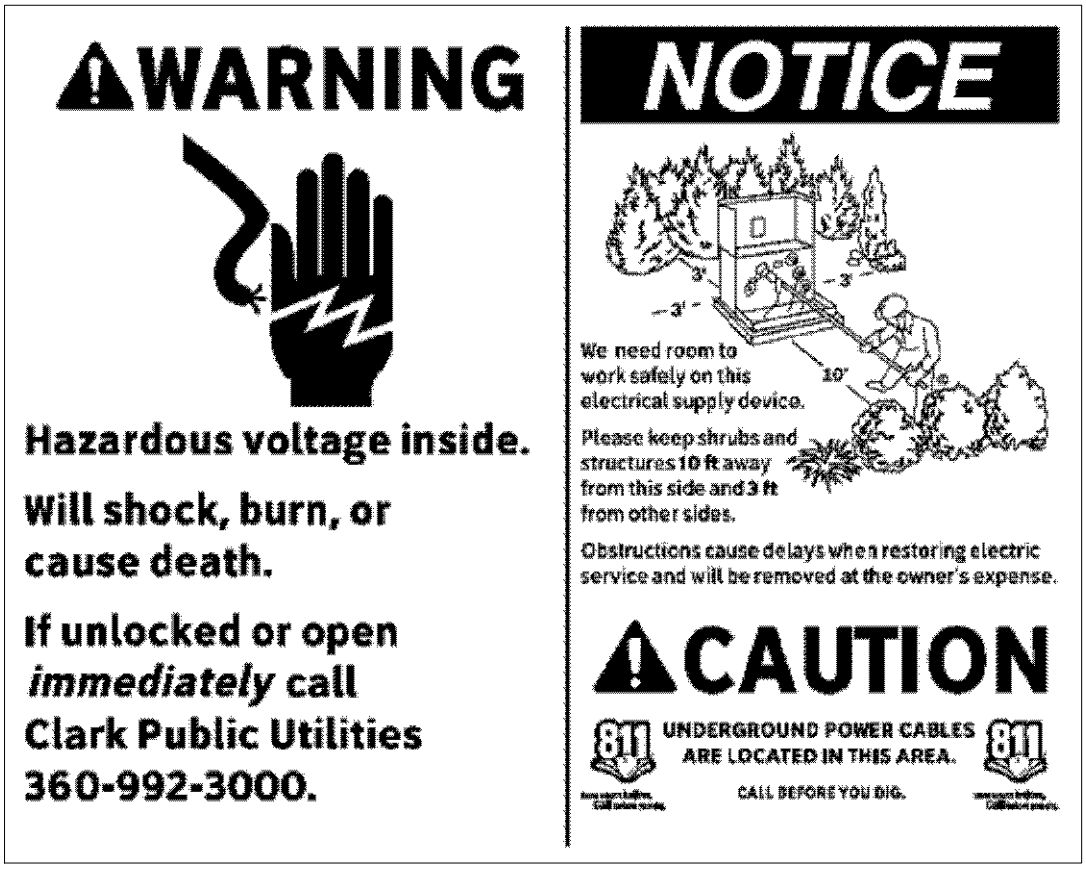

Label for outside of padmounted equipment S/N 2568

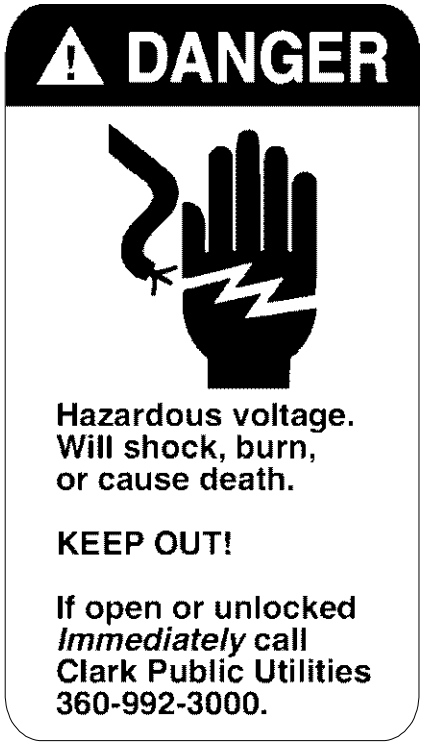

Label for inside of padmounted equipment S/N 2569

Rev. 2 - Updated warning and danger signs.

Clark Public Utilities

CONSTRUCTION STANDARDS

PADMOUNTED EQUIPMENT
IDENTIFICATION TAGS AND
SAFETY SIGNS

REVISIONS

R	DATE	ENGR	OPS
0	6/13/02		
1	6/23/04	LB	AH
2	8/3/18	KJP	

PAGE: 1 of 3

UID1

CAD FILE: UID1

APP: ELM

DATE: 1/31/80

SECTION 1400

1. SINGLE-PHASE PADMOUNTED TRANSFORMERS

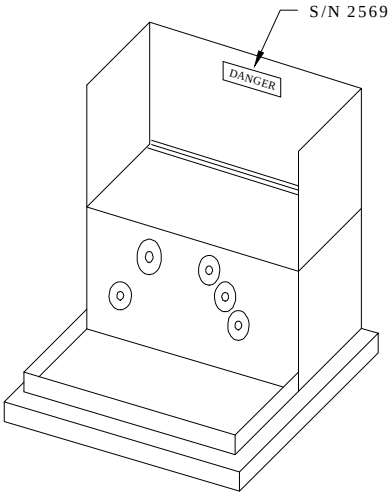

VIEW WITH LID OPEN

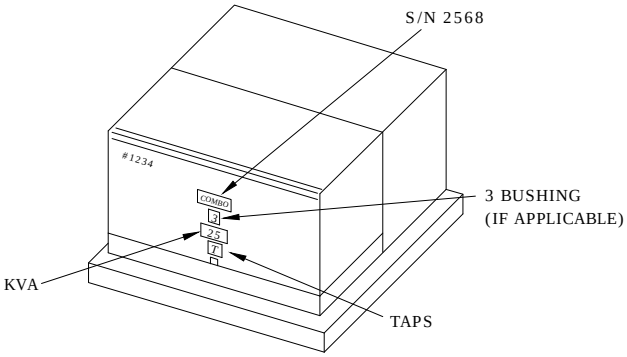

VIEW WITH LID CLOSED

2. THREE-PHASE PADMOUNTED TRANSFORMERS

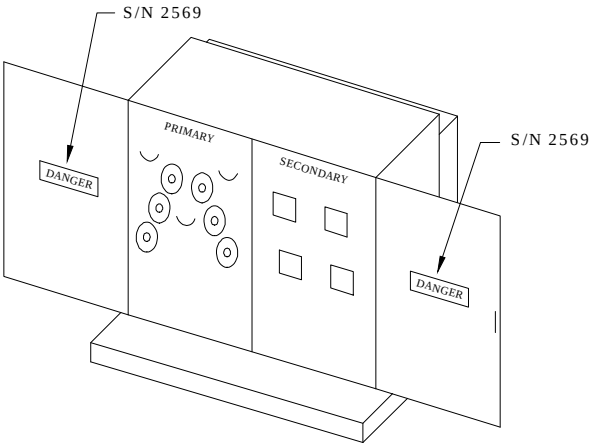

VIEW WITH DOOR OPEN

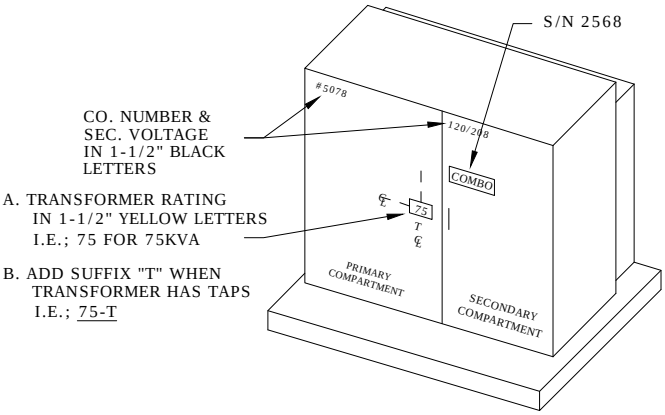

VIEW WITH DOOR CLOSED

3. OTHER PADMOUNT EQUIPMENT

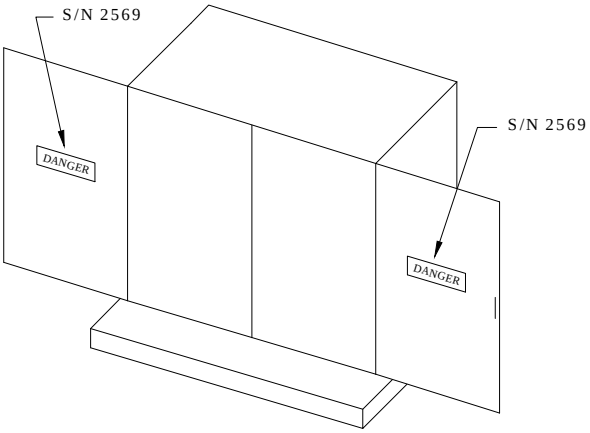

VIEW WITH DOOR OPEN

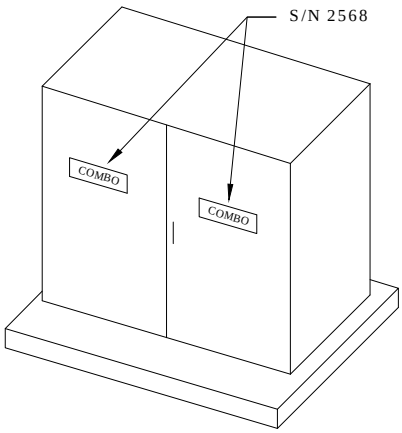

VIEW WITH DOOR CLOSED

Rev. 2 - Updated warning and danger signs.

Clark Public Utilities

CONSTRUCTION STANDARDS

PADMOUNTED EQUIPMENT
IDENTIFICATION TAGS AND
SAFETY SIGNS

REVISIONS

R	DATE	ENGR	OPS
0	6/13/02		
1	6/23/04	LB	AH
2	8/3/18	KJP	

PAGE: 2 of 3

UID1

CAD FILE: UID1

APP: ELM

DATE: 1/31/80

SECTION 1400

4. SINGLE-PHASE J-BOX

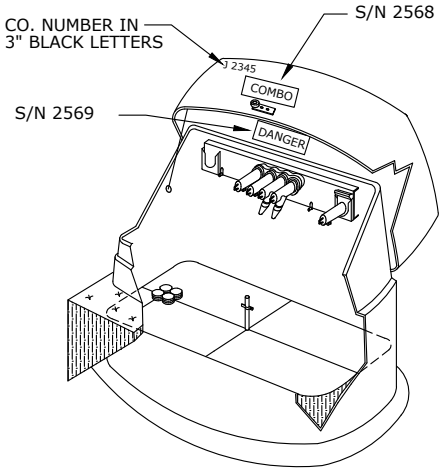

4. THREE-PHASE J-BOX

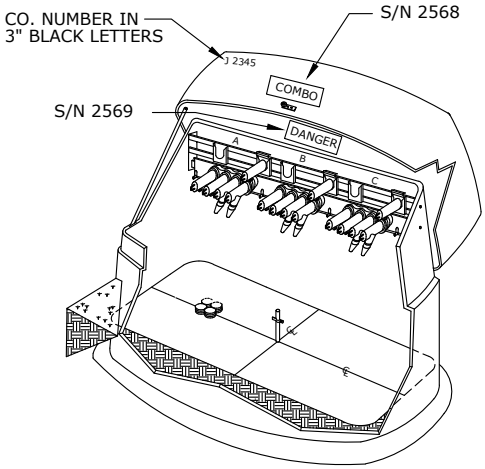

Rev. 2 - Updated warning and danger signs.

Clark Public Utilities

CONSTRUCTION STANDARDS

PADMOUNTED EQUIPMENT
IDENTIFICATION TAGS AND
SAFETY SIGNS

REVISIONS

R	DATE	ENGR	OPS
0	6/13/02		
1	6/23/04	LB	AH
2	8/3/18	KJP	

PAGE: 3 of 3

UID1

CAD FILE: UID1

APP: ELM

DATE: 1/31/80

SECTION 1400

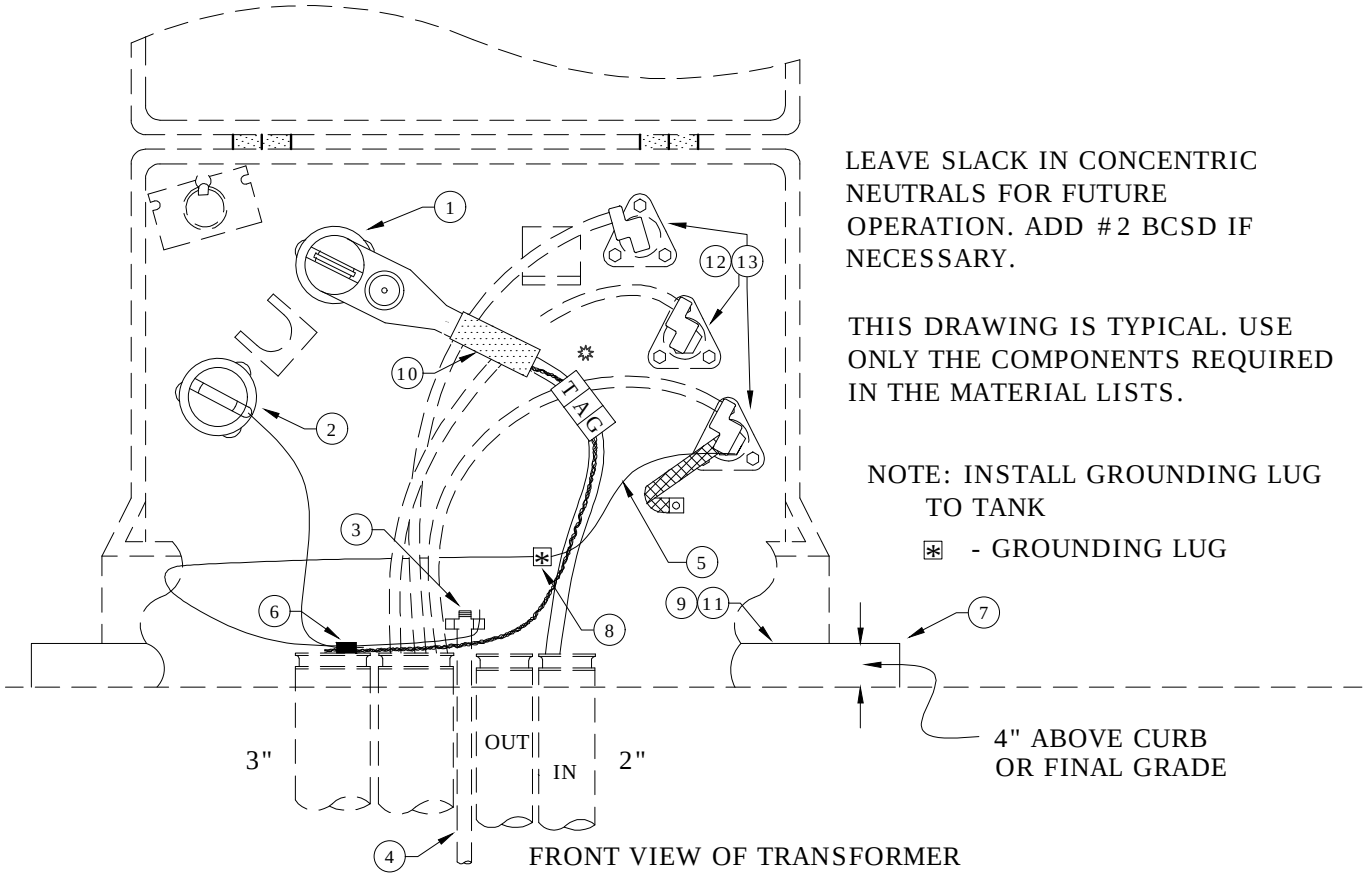

LEAVE SLACK IN CONCENTRIC NEUTRALS FOR FUTURE OPERATION. ADD #2 BCSD IF NECESSARY.

THIS DRAWING IS TYPICAL. USE ONLY THE COMPONENTS REQUIRED IN THE MATERIAL LISTS.

NOTE: INSTALL GROUNDING LUG TO TANK

⊠ - GROUNDING LUG

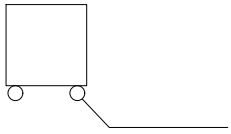

RADIAL FEED

UT2

SEE US6 FOR SECONDARY CONNECTIONS DETAILS

MATERIAL LIST

ITEM NO.	DESCRIPTION	QTY.	S/N
1	Elbow, Loadbreak, 1/0, 200A, 175 mil	1	1312
2	Cap, Protective Insulated, 200A	1	265
3	Clamp, Ground Rod 5/8", Small	1	281
4	Rod, Ground 5/8" x 8'	1	1124
5	Conductor, Wire BSDC #4 SLD	6	376
6	Connector, Crimpet, #4 to #2	1	454
7	Pad, Transformer 42" x 42"	1	929
8	Ground Lug	1	842
9	Bolt, Machine, 1/2" x 1-1/2" SS	2	131✲
10	Elbow, Sealing Kit, 1/0, 175 & 220 mil	1	2391✲
11	Washer, 2" x 3" x 3/16" w/ 9/16" Slotted Hole	2	1415
12	Connector, z-bar #2-500 MCM + Streetlight	3	2265
13	Cover, Connector U.G.	3	2266

Rev. 4 - Corrected material issue.

Clark Public Utilities

CONSTRUCTION STANDARDS

SINGLE PHASE
PADMOUNT TRANSFORMER
RADIAL FEED

REVISIONS

R	DATE	ENGR	OPS
1	2/23/00	HWH	MA
2	9/23/04	LB	AH
3	12/29/04	LB	AH
4	11/11/16	KJP	

PAGE: 1 of 1

UT2

CAD FILE: UT2

APP: JEH

DATE: 2/22/00

SECTION 1400

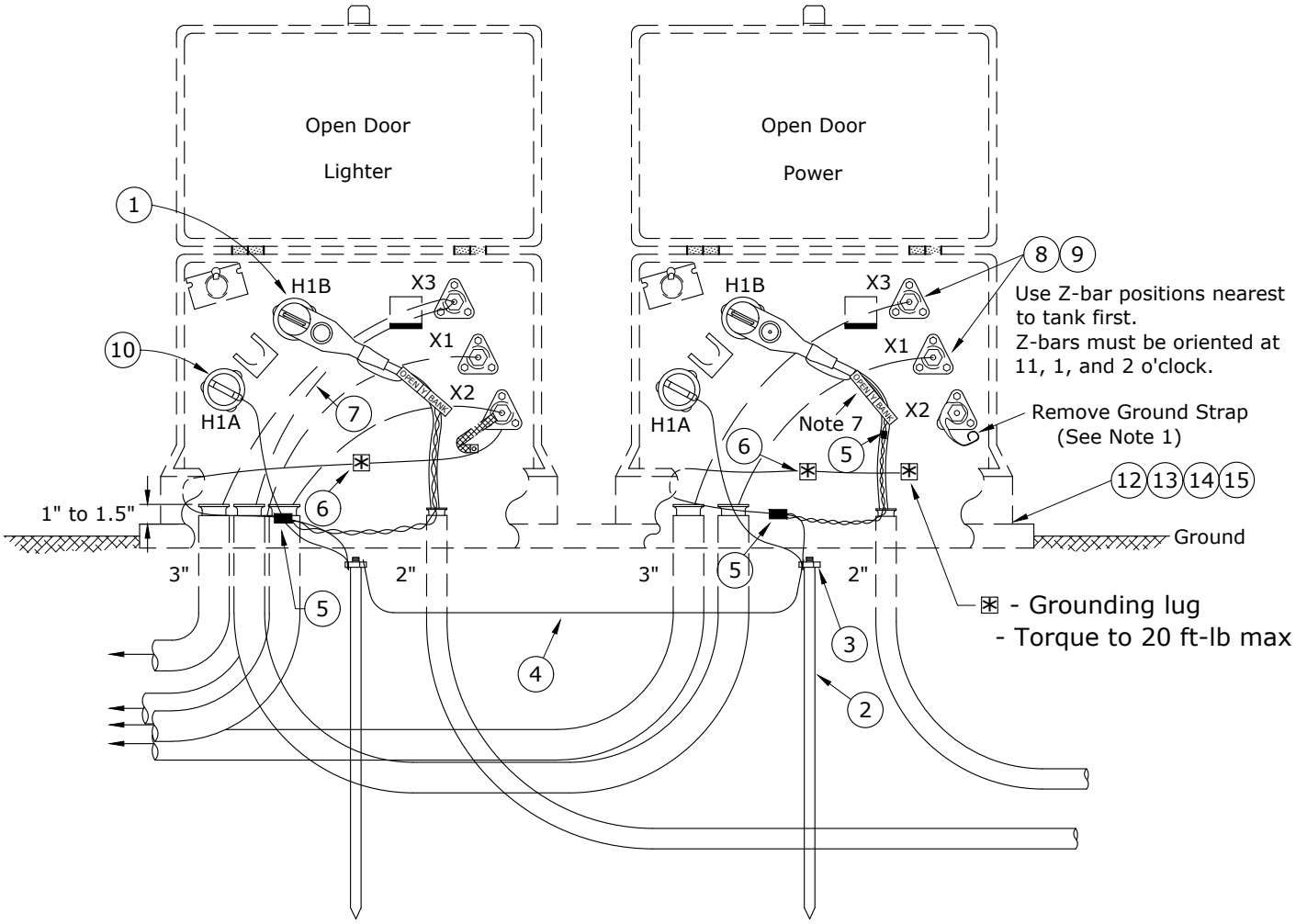

Notes:

1. Remove ground strap from one secondary neutral bushing. Caution: Measure resistance from bushing to tank. There may be an internal ground.
2. Ground rods may be driven in trench.
3. Primary and secondary cables may be arranged as required to fit job site.
4. For 2-25kVA only.
5. See Std UTP1 for pad specifications.
6. Both phases must come from the same source and direction.
7. Put tags on cables that say "Open Y Bank".
8. Maximum motor size shall be 15 horsepower.

Rev 6 - Changed to 200A elbow with integral jacket seal, and added pad to material list.

Clark Public Utilities

CONSTRUCTION STANDARDS

OPEN WYE - OPEN DELTA
PADMOUNT TRANSFORMER
INSTALLATION

REVISIONS

R	DATE	ENGR	OPS
3	12/2/22	LB	AH
4	12/14/09	KJP	
5	2/4/14	CM	AH
6	3/7/23	CM	GM

PAGE: 1 of 2

UT4

CAD FILE: UT4

APP: TR/GM
DATE: 1/2/80

SECTION 1400

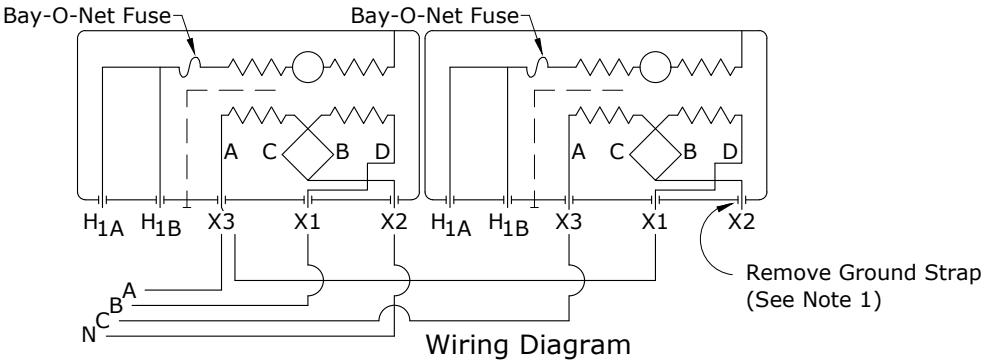

Wiring Diagram

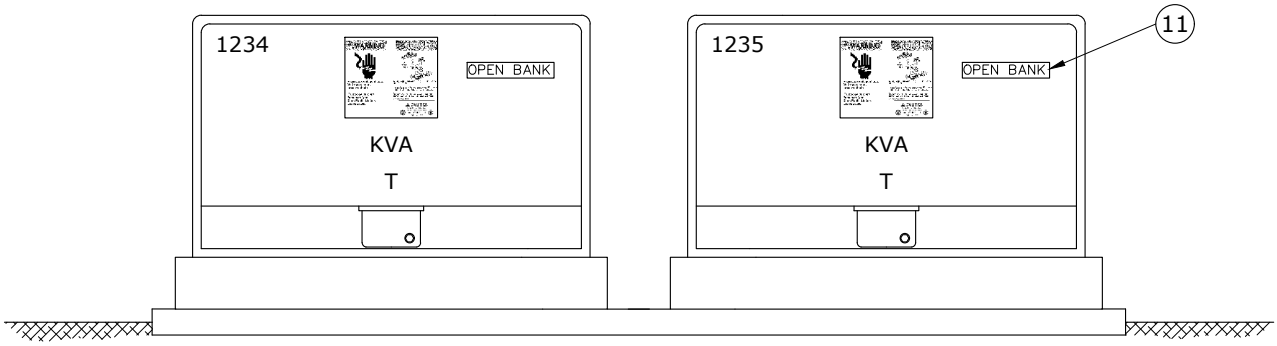

Rev 6 - Changed to 200A elbow with integral jacket seal, and added pad to material list.

ITEM NO.	DESCRIPTION	UT4	
		QTY.	S/N
1	Elbow, 200A, Loadbreak, 1/0, 200A, 175 & 200 mil, Test Point, 15 kV, w/ Jacket Seal	2	1312 ✡
2	Rod, Ground, 5/8" x 8'	2	1124
3	Clamp, Ground Rod 5/8", Bronze, Small	2	281
4	Conductor, Cu, #4 Solid, Bare, Soft-Drawn, 1C	30	376
5	Connector, Crimpet, Cu, Run #2 Sol/Str, Tap #8 Sol - #4 Str (2C4)	2	454
6	Lug, Grounding, #8 Sol-2/0 Str, 4-way	3	842
7	Cable, UG, 600v, Al, 4/0, USE, 1C	13	353
8	Connector, Z-Bar, 5/8" Stud, Al/Cu, 6-position, #2 - 500 MCM + Streetlight	5	2265
9	Cover, Connector, Z-Bar, 6-position	5	2266
10	Cap, Protective Insulated, 200A, 15 kV	2	265
11	Label, "Open Bank"	2	2781
12	Pad, Transformer 42" x 42", 1Ø, 25-75 kVA	2	929 ✡
13	Bolt, Machine, 1/2" x 1-1/2" SS	4	131 ✡
14	Washer, 2" x 3" x 3/16" w/ 9/16" Slotted Hole	4	1415 ✡
15	Nut, Spring Loaded, Galv, 1/2" (Unistrut)	4	920 ✡

Clark Public Utilities

CONSTRUCTION STANDARDS

OPEN WYE - OPEN DELTA
PADMOUNT TRANSFORMER
INSTALLATION

REVISIONS

R	DATE	ENGR	OPS
3	12/29/04	LB	AH
4	12/14/09	KJP	
5	2/4/14	CM	AH
6	3/7/23	CM	GM

PAGE: 2 of 2

UT4

CAD FILE: UT4

APP: TR/GM

DATE: 9/94

SECTION 1400

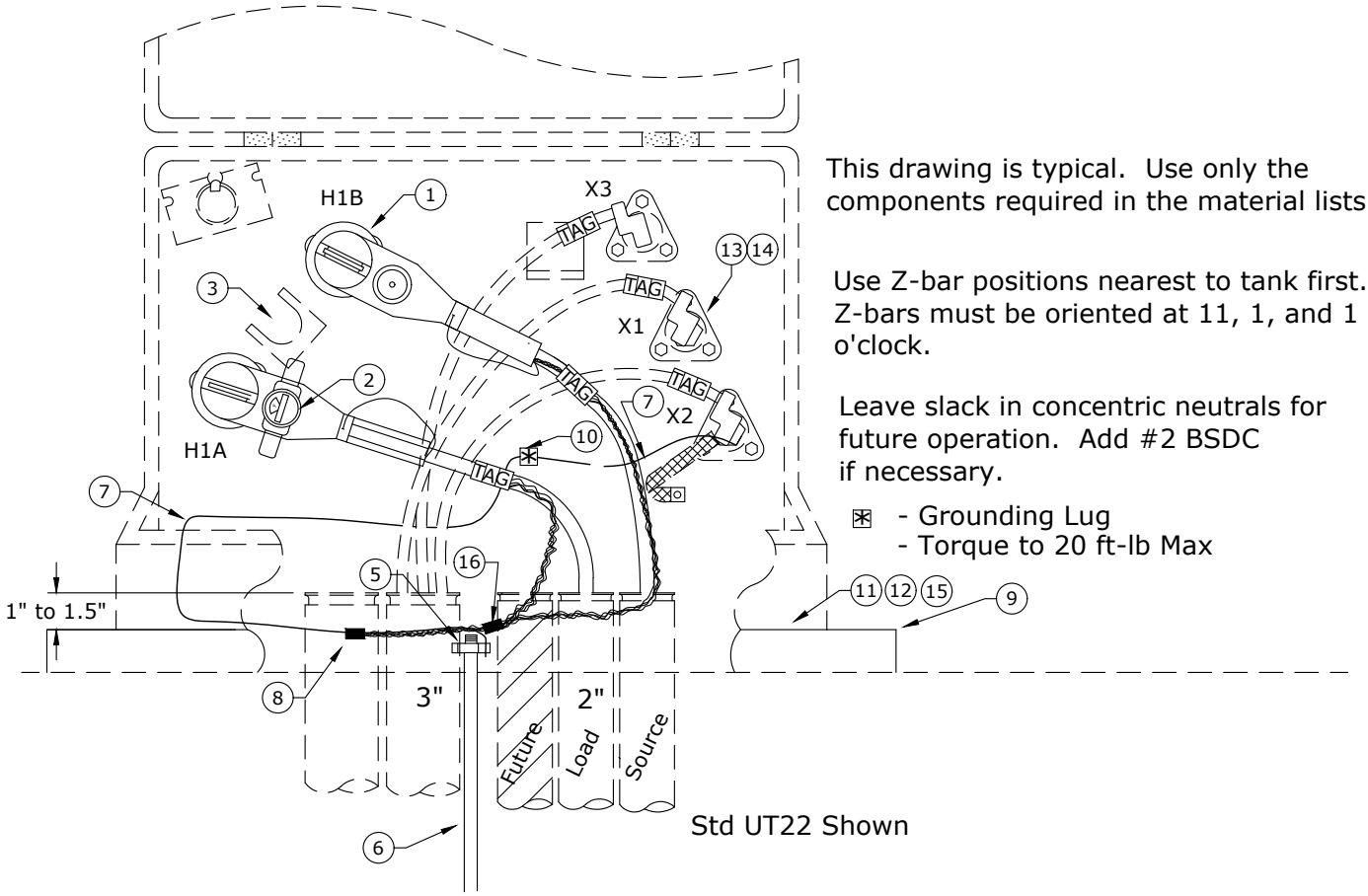

This drawing is typical. Use only the components required in the material lists.

Use Z-bar positions nearest to tank first. Z-bars must be oriented at 11, 1, and 1 o'clock.

Leave slack in concentric neutrals for future operation. Add #2 BSDC if necessary.

⊠ - Grounding Lug
- Torque to 20 ft-lb Max

Std UT22 Shown

Note: 1. See Std US6 for secondary connection details.

Rev 4 - Changed to 200A elbow with integral jacket seal.

Clark Public Utilities

CONSTRUCTION STANDARDS

SINGLE PHASE
PADMOUNT TRANSFORMER ASSEMBLIES
LOOP FEED

PAGE: 1 of 2

UT21-UT22

CAD FILE: UT21-UT22

REVISIONS

R	DATE	ENGR	OPS
1	9/23/04	LB	AH
2	12/29/04	LB	AH
3	4/29/09	CM	AH
4	5/8/24	DK	

APP: HWH/GW
DATE: 1/22/80

SECTION 1400

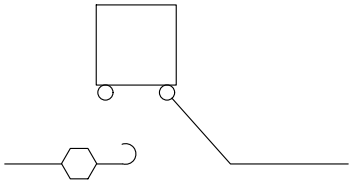

UT21

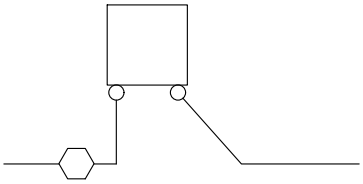

UT22

FAULT INDICATOR

NORMALLY OPEN

Rev 4 - Changed to 200A elbow with integral jacket seal.

ITEM NO.	DESCRIPTION	UT21	
		QTY.	S/N
1	Elbow, 200A, Loadbreak, 1/0, 175 & 220 mil, Test Point, 15kV, w/ Jacket Seal	2	1312 ✡
2	Indicator, Fault, UG, 400A, Test Point, Voltage Reset, 1Ø	1	2694
3	Bushing, Standoff Insulated 200A	1	252
4	Cap, Protective Insulated, 200A, 15kV	1	265
5	Clamp, Ground Rod, 5/8", Bronze, Small	1	281
6	Rod, Ground, 5/8" x 8'	1	1124
7	Conductor, Cu, #4 Solid, Bare, Soft-Drawn, 1C	12	376
8	Connector, Crimpet, Cu, Run #2 Sol/Str, Tap #8 Sol - #4 Str (2C4)	1	454
9	Pad, Transformer 42" x 42", 1Ø, 25-75 kVA	1	929
10	Lug, Grounding, #8 Sol - 2/0 Str, 4-way	1	842
11	Bolt, Machine, 1/2" x 1-1/2" SS	2	131 ✡
12	Washer, 2" x 3" x 3/16" w/ 9/16" Slotted Hole	2	1415
13	Connector, Z-Bar, 5/8" Stud, Al/Cu, 6-position, #2-500 MCM + Streetlight	3	2265
14	Cover, Connector, Z-Bar, 6-position	3	2266
15	Nut, Spring Loaded, Galv, 1/2" (Unistrut)	2	920 ✡

ITEM NO.	DESCRIPTION	UT22	
		QTY.	S/N
1	Elbow, 200A, Loadbreak, 1/0, 175 & 220 mil, Test Point, 15 kV, w/ Jacket Seal	2	1312 ✡
2	Indicator, Fault, UG, 400A, Test Point, Voltage Reset, 1Ø	1	2694
5	Clamp, Ground Rod, 5/8", Bronze, Small	1	281
6	Rod, Ground 5/8" x 8'	1	1124
7	Conductor, Cu, #4 Solid, Bare, Soft-Drawn, 1C	12	376
8	Connector, Crimpet, Cu, Run#2 Sol/Str, Tap #8 Sol - #4 Str (2C4)	1	454
9	Pad, Transformer, 42" x 42", 1Ø, 25-75 kVA	1	929
10	Lug, Grounding, #8 Sol - 2/0 Str, 4-way	1	842
11	Bolt, Machine, 1/2" x 1-1/2" SS	2	131 ✡
12	Washer, 2" x 3" x 3/16" w/ 9/16" Slotted Hole	2	1415
13	Connector, Z-Bar, 5/8" Stud, Al/Cu, 6-position, #2-500 MCM + Streetlight	3	2265
14	Cover, Connector, Z-Bar, 6-position	3	2266
15	Nut, Spring Loaded, Galv, 1/2" (Unistrut)	2	920 ✡
16	Connector, Crimpet, Cu, Run and Tap #2 Sol/Str (2C2)	1	455

Clark Public Utilities

CONSTRUCTION STANDARDS

SINGLE PHASE
PADMOUNT TRANSFORMER ASSEMBLIES
LOOP FEED

REVISIONS

R	DATE	ENGR	OPS
1	9/23/04	LB	AH
2	12/29/04	LB	AH
3	4/29/09	CM	AH
4	5/8/24	DK	

PAGE: 2 of 2

UT21-UT22

CAD FILE: UT21-UT22

APP: HWH/GW

DATE: 1/22/80

SECTION 1400

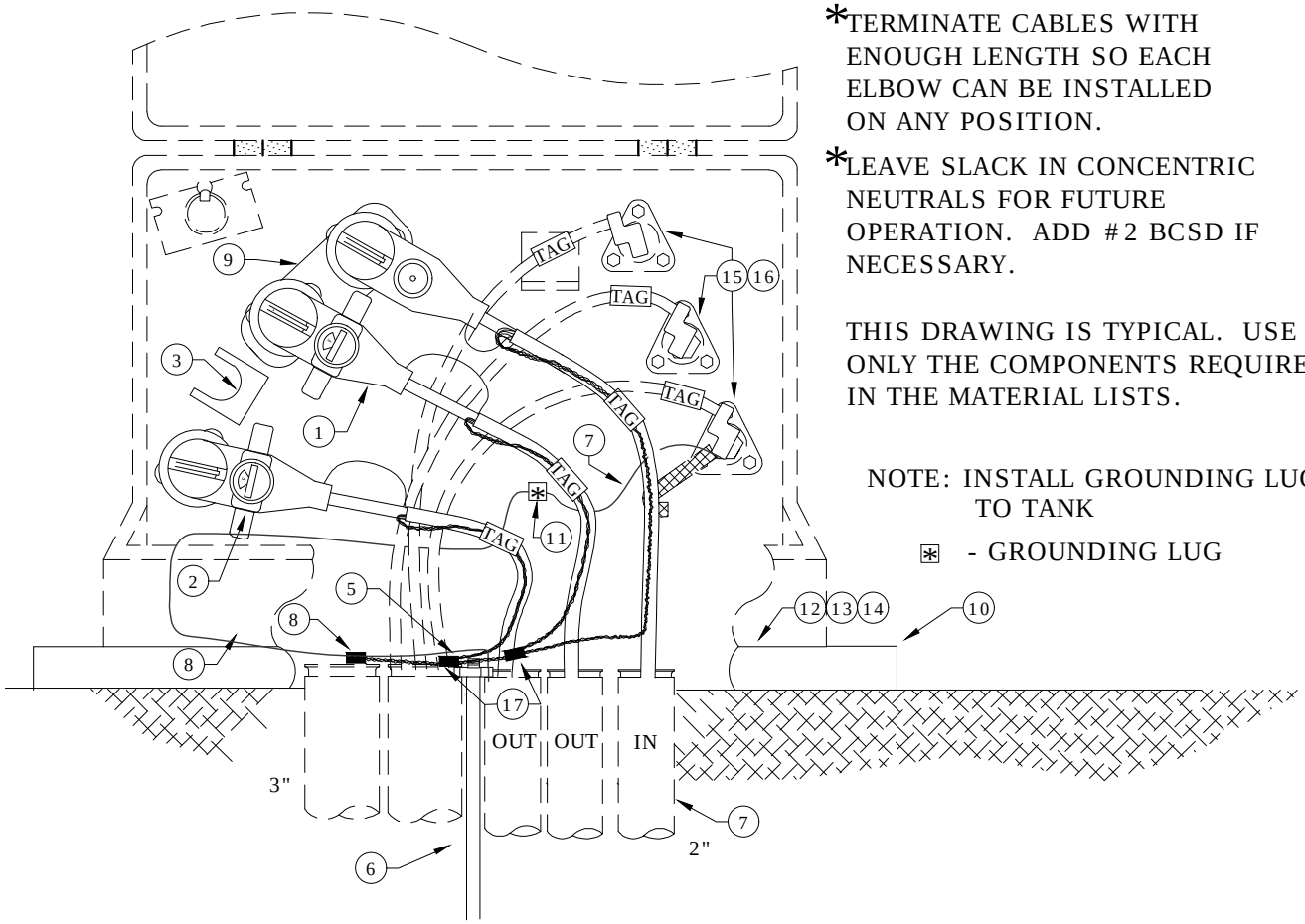

*TERMINATE CABLES WITH ENOUGH LENGTH SO EACH ELBOW CAN BE INSTALLED ON ANY POSITION.

*LEAVE SLACK IN CONCENTRIC NEUTRALS FOR FUTURE OPERATION. ADD #2 BCSD IF NECESSARY.

THIS DRAWING IS TYPICAL. USE ONLY THE COMPONENTS REQUIRED IN THE MATERIAL LISTS.

NOTE: INSTALL GROUNDING LUG TO TANK

⊠ - GROUNDING LUG

FRONT VIEW OF TRANSFORMER UT28

SEE US6 FOR SECONDARY CONNECTORS DETAILS

Rev 4: Changed to Voltage-reset fault indicators.

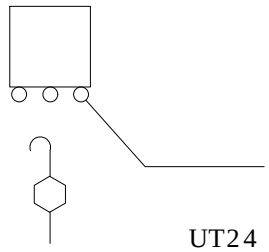

RADIAL FEED UT24

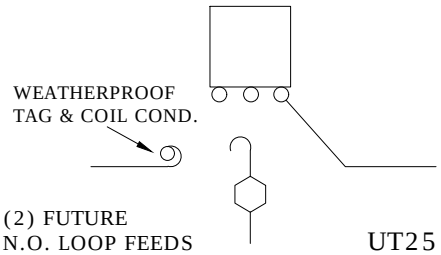

(2) FUTURE
N.O. LOOP FEEDS UT25

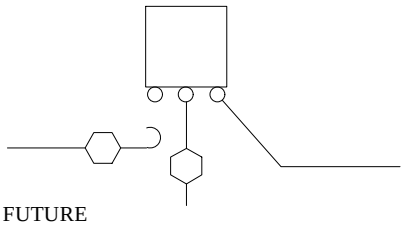

(1) FUTURE
(1) LOOP FEED UT26

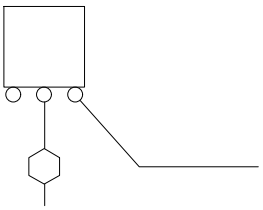

LOOP FEED UT27

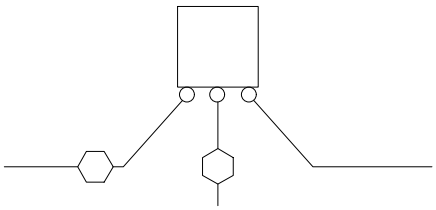

(2) LOOP UT28

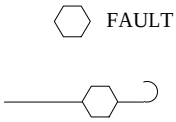

FAULT INDICATOR

NORMALLY OPEN

Clark Public Utilities

CONSTRUCTION STANDARDS

SINGLE PHASE
PADMOUNT TRANSFORMER ASSEMBLIES RADIAL
OR LOOP FEED WITH FEED-THROUGH BUSHING

REVISIONS

R	DATE	ENGR	OPS
1	7/15/02	JEH	TR
2	9/23/04	LB	AH
3	12/29//04	LB	AH
4	4/29/09	CM	AH

PAGE: 1 of 4

UT24-UT28

CAD FILE: UT24-UT28

APP:

DATE: 10/94

SECTION 1400

Rev 4: Changed to Voltage-reset fault indicators.

ITEM NO.	DESCRIPTION	UT24 QTY.	UT24 S/N
1	Elbow, Loadbreak. 1/0, 200A, 175 mil	2	1312
2	Voltage-Reset Fault Indicator, 400A Trip, 1Ø UG	1	2694 ✲
3	Bushing, Standoff Insulated 200A	1	252
4	Cap, Protective Insulated 200A	2	265
5	Clamp, Ground Rod 5/8", Small	1	281
6	Rod, Ground 5/8" x 8'	1	1124
7	Conductor, Wire BSDC #4 SLD	6	376
8	Connector, Crimpet, #4 to #2 (2C4)	1	454
9	Insert, Feed-Through	1	237
10	Pad, Transformer 42" x 42"	1	929
11	Ground Lug	1	842
12	Bolt, Unistrut, Padmount Tie Down	2	193
13	Nut, Spring-loaded, Galv, 1/2", Unistrut	2	920
14	Washer, 2" X 3" X 3/16" w/ 9/16" slotted hole	2	1415
15	Connector, Z-Bar #6-500 MCM + St. Lt	3	2265
16	Cover, Connector U.G.	3	2266
17	Connector, Crimpet, #2 to #2 (2C2)	1	455

ITEM NO.	DESCRIPTION	UT25 QTY.	UT25 S/N
1	Elbow, Loadbreak. 1/0, 200A, 175 mil	2	1312
2	Voltage-Reset Fault Indicator, 400A Trip, 1Ø UG	1	2694 ✲
3	Bushing, Standoff Insulated 200A	1	252
4	Cap, Protective Insulated 200A	2	265
5	Clamp, Ground Rod 5/8", Small	1	281
6	Rod, Ground 5/8" x 8'	1	1124
7	Conductor, Wire BSDC #4 SLD	6	376
8	Connector, Crimpet, #4 to #2 (2C4)	1	454
9	Insert, Feed-Through	1	237
10	Pad, Transformer 42" x 42"	1	929
11	Ground Lug	1	842
12	Bolt, Unistrut, Padmount Tie Down	2	193
13	Nut, Spring-loaded, Galv, 1/2", Unistrut	2	920
14	Washer, 2" X 3" X 3/16" w/ 9/16" slotted hole	2	1415
15	Connector, Z-Bar #6-500 MCM + St. Lt	3	2265
16	Cover, Connector U.G.	3	2266
17	Connector, Crimpet, #2 to #2 (2C2)	1	455

Clark Public Utilities

CONSTRUCTION STANDARDS

SINGLE PHASE
PADMOUNT TRANSFORMER ASSEMBLIES RADIAL
OR LOOP FEED WITH FEED-THROUGH BUSHING

REVISIONS

R	DATE	ENGR	OPS
1	7/15/02	JEH	TR
2	9/23/04	LB	AH
3	12/29/04	LB	AH
4	4/29/09	CM	AH

UT24-UT28

CAD FILE: UT24-UT28

APP:

DATE: 10/94

SECTION 1400

Rev 4: Changed to Voltage-reset fault indicators.

ITEM NO.	DESCRIPTION	UT26 QTY.	UT26 S/N
1	Elbow, Loadbreak, 1/0, 200A, 175 mil	3	1312
2	Voltage-Reset Fault Indicator, 400A Trip, 1Ø UG	2	2694 ✲
3	Bushing, Standoff Insulated 200A	1	252
4	Cap, Protective Insulated 200A	1	265
5	Clamp, Ground Rod 5/8", Small	1	281
6	Rod, Ground 5/8" x 8'	1	1124
7	Conductor, Wire BSDC #4 SLD	6	376
8	Connector, Crimpet, #4 to #2 (2C4)	1	454
9	Insert, Feed-Through	1	237
10	Pad, Transformer 42" x 42"	1	929
11	Ground Lug	1	842
12	Bolt, Unistrut, Padmount Tie Down	2	193
13	Nut, Spring-loaded, Galv, 1/2", Unistrut	2	920
14	Washer, 2" X 3" X 3/16" w/ 9/16" slotted hole	2	1415
15	Connector, Z-Bar #6-500 MCM + St. Lt	3	2265
16	Cover, Connector U.G.	3	2266
17	Connector, Crimpet, #2 to #2 (2C2)	2	455

ITEM NO.	DESCRIPTION	UT27 QTY.	UT27 S/N
1	Elbow, Loadbreak, 1/0, 200A, 175 mil	2	1312
2	Voltage-Reset Fault Indicator, 400A Trip, 1Ø UG	1	2694 ✲
3	Bushing, Standoff Insulated 200A	1	252
4	Cap, Protective Insulated 200A	1	265
5	Clamp, Ground Rod 5/8", Small	1	281
6	Rod, Ground 5/8" x 8'	1	1124
7	Conductor, Wire BSDC #4 SLD	6	376
8	Connector, Crimpet, #4 to #2 (2C4)	1	454
9	Insert, Feed-Through	1	237
10	Pad, Transformer 42" x 42"	1	929
11	Ground Lug	1	842
12	Bolt, Unistrut, Padmount Tie Down	2	193
13	Nut, Spring-loaded, Galv, 1/2", Unistrut	2	920
14	Washer, 2" X 3" X 3/16" w/ 9/16" slotted hole	2	1415
15	Connector, Z-Bar #6-500 MCM + St. Lt	3	2265
16	Cover, Connector U.G.	3	2266
17	Connector, Crimpet, #2 to #2 (2C2)	1	455

Clark Public Utilities

CONSTRUCTION STANDARDS

SINGLE PHASE
PADMOUNT TRANSFORMER ASSEMBLIES RADIAL
OR LOOP FEED WITH FEED-THROUGH BUSHING

REVISIONS

R	DATE	ENGR	OPS
1	7/15/02	JEH	TR
2	9/23/04	LB	AH
3	12/29/04	LB	AH
4	4/29/09	CM	AH

UT24-UT28

CAD FILE: UT24-UT28

APP:

DATE: 10/94

SECTION 1400

Rev 4: Changed to Voltage-reset fault indicators.

ITEM NO.	DESCRIPTION	UT28 QTY.	UT28 S/N
1	Elbow, Loadbreak, 1/0, 200A, 175 mil	3	1312
2	Voltage-Reset Fault Indicator, 400A Trip, 1Ø UG	2	2694 ✲
3	Bushing, Standoff Insulated 200A	1	252
4	Cap, Protective Insulated 200A	-	265
5	Clamp, Ground Rod 5/8", Small	1	281
6	Rod, Ground 5/8" x 8'	1	1124
7	Conductor, Wire BSDC #4 SLD	6	376
8	Connector, Crimpet, #4 to #2 (2C4)	1	454
9	Insert, Feed-Through	1	237
10	Pad, Transformer 42" x 42"	1	929
11	Ground Lug	1	842
12	Bolt, Unistrut, Padmount Tie Down	2	193
13	Nut, Spring-loaded, Galv, 1/2", Unistrut	2	920
14	Washer, 2" X 3" X 3/16" w/ 9/16" slotted hole	2	1415
15	Connector, Z-Bar #6-500 MCM + St. Lt	3	2265
16	Cover, Connector U.G.	3	2266
17	Connector, Crimpet, #2 to #2 (2C2)	2	455

Clark Public Utilities

CONSTRUCTION STANDARDS

SINGLE PHASE
PADMOUNT TRANSFORMER ASSEMBLIES RADIAL
OR LOOP FEED WITH FEED-THROUGH BUSHING

REVISIONS

R	DATE	ENGR	OPS
1	7/15/02	JEH	TR
2	9/23/04	LB	AH
3	12/29/04	LB	AH
4	4/29/09	CM	AH

PAGE: 4 of 4

UT24-UT28

CAD FILE: UT24-UT28

APP:

DATE: 10/94

SECTION 1400

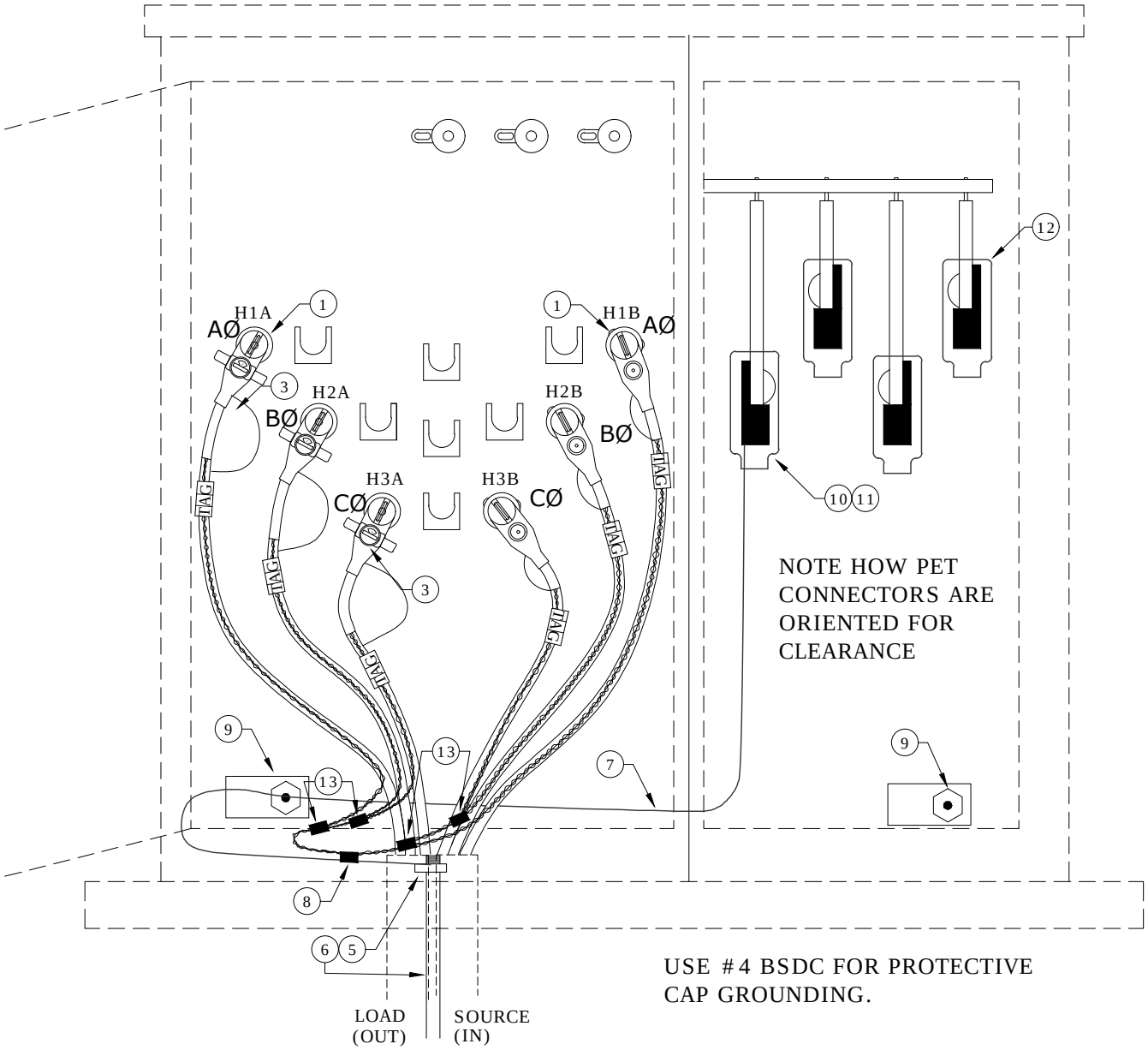

FRONT VIEW OF TRANSFORMER

(UT32 SHOWN)

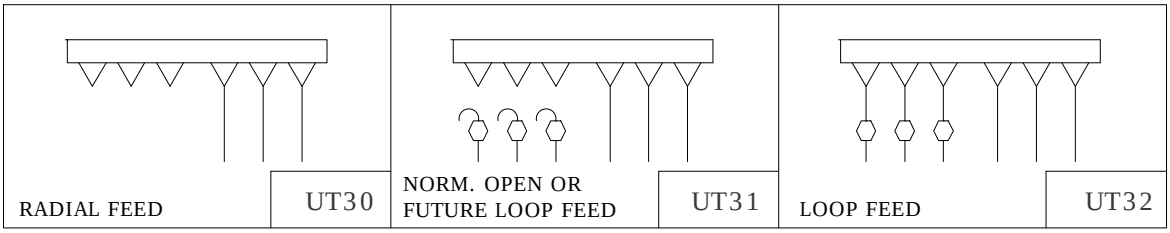

NOTE: SPECIFY I.D. TAGS AS REQUIRED.

Rev 3: Changed to Voltage-reset fault indicators.

Clark Public Utilities

CONSTRUCTION STANDARDS

THREE PHASE
PADMOUNT TRANSFORMER ASSEMBLIES

REVISIONS

R	DATE	ENGR	OPS
1	2/23/00	HWH	MA
2	9/23/04	LB	AH
3	4/29/09	CM	AH

PAGE: 1 of 3

UT30-UT32

CAD FILE: UT30

APP:

DATE: 10/99

SECTION 1400

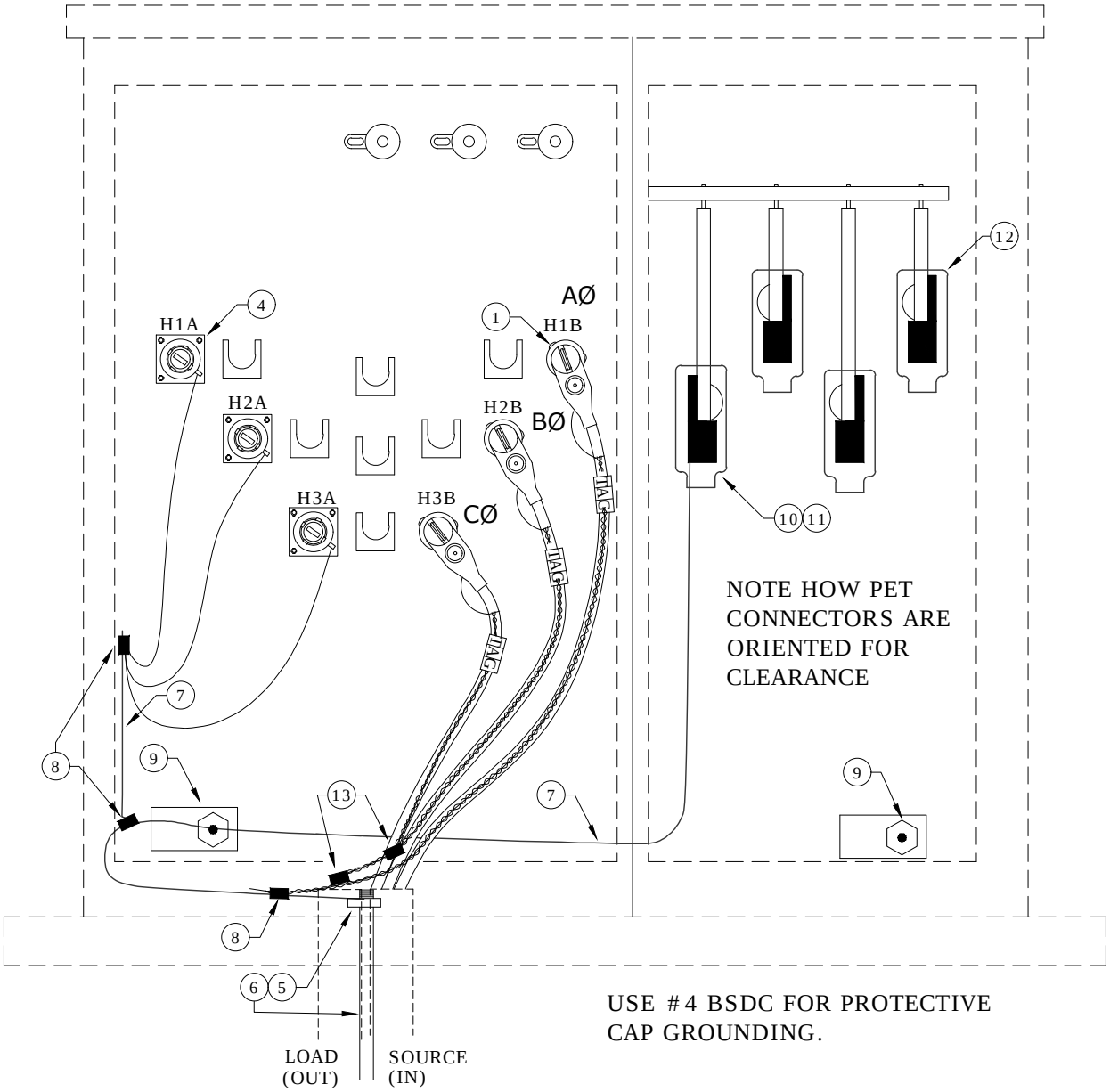

FRONT VIEW OF TRANSFORMER

(UT30 SHOWN)

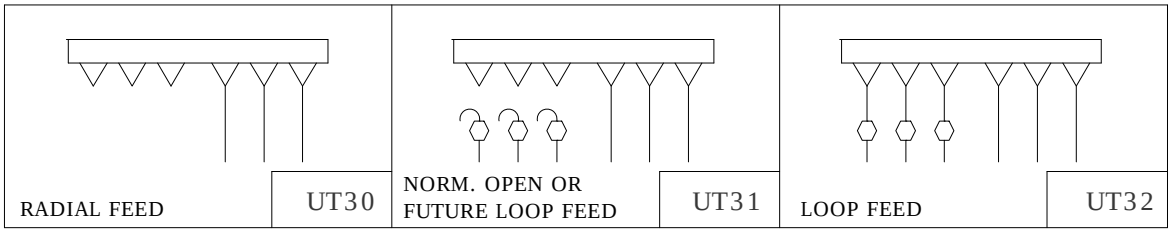

NOTE: SPECIFY I.D. TAGS AS REQUIRED.

Rev 3: Changed to Voltage-reset fault indicators.

Clark Public Utilities

CONSTRUCTION STANDARDS

THREE PHASE
PADMOUNT TRANSFORMER ASSEMBLIES

REVISIONS

R	DATE	ENGR	OPS
1	2/23/00	HWH	MA
2	9/23/04	LB	AH
3	4/29/09	CM	AH

PAGE: 2 of 3

UT30-UT32

CAD FILE: UT30

APP:

DATE: 10/99

SECTION 1400

Rev 3: Changed to Voltage-reset fault indicators.

ITEM NO.	DESCRIPTION	UT30	
		QTY.	S/N
1	Elbow, Loadbreak, 1/0, 200A, 175 mil	3	1312
4	Cap, Protective Insulated 200A	3	265
5	Clamp, Ground Rod 5/8", Small	1	281
6	Rod, Ground 5/8" x 8'	1	1124
7	Conductor, Wire BSDC #4 SLD	10	376
8	Connector, Crimpet, #4 to #2 (2C4)	1	454
9	Ground Lug	2	842
10	Connector, PET, #2-750 Al/Cu, 6 Position	4	2129
11	Bolt, Machine, 1/2 x 2" SS w/ Bronze Nut & Belleville Washer	16	1389
12	Cover, PET, 8 Position	4	2182
13	Connector, Crimpet, #2 to #2 (2C2)	2	455

ITEM NO.	DESCRIPTION	UT31	
		QTY.	S/N
1	Elbow, Loadbreak, 1/0, 200A, 175 mil	6	1312
2	Bushing, Standoff Insulated 200A	3	252
3	Voltage-Reset Fault Indicator, 400A Trip, 1Ø UG	3	2694 ✲
4	Cap, Protective Insulated, 200A	3	265
5	Clamp, Ground Rod 5/8", Small	1	281
6	Rod, Ground 5/8" x 8'	1	1124
7	Conductor, Wire BSDC #4 SLD	10	376
8	Connector, Crimpet, #4 to #2 (2C4)	1	454
9	Ground Lug	2	842
10	Connector, PET, #2-750 Al/Cu, 6 Position	4	2129
11	Bolt, Machine, 1/2 x 2" SS w/ Bronze Nut & Belleville Washer	16	1389
12	Cover, PET, 8 Position	4	2182
13	Connector, Crimpet, #2 to #2 (2C2)	4	455

ITEM NO.	DESCRIPTION	UT32	
		QTY.	S/N
1	Elbow, Loadbreak, 1/0, 200A, 175 mil	6	1312
3	Voltage-Reset Fault Indicator, 400A Trip, 1Ø UG	3	2694 ✲
5	Clamp, Ground Rod 5/8", Small	1	281
6	Rod, Ground 5/8" x 8'	1	1124
7	Conductor, Wire BSDC #4 SLD	10	376
8	Connector, Crimpet, #4 to #2 (2C4)	1	454
9	Ground Lug	2	842
10	Connector, PET, #2-750 Al/Cu, 6 Position	4	2129
11	Bolt, Machine, 1/2 x 2" SS w/ Bronze Nut & Belleville Washer	16	1389
12	Cover, PET, 8 Position	4	2182
13	Connector, Crimpet, #2 to #2 (2C2)	4	455

Clark Public Utilities

CONSTRUCTION STANDARDS

THREE PHASE
PADMOUNT TRANSFORMER ASSEMBLIES

REVISIONS

R	DATE	ENGR	OPS
1	2/23/00	HWH	MA
2	9/23/04	LB	AH
3	4/29/09	CM	AH

PAGE: 3 of 3

UT30-UT32

CAD FILE: UT30

APP:

DATE: 10/99

SECTION 1400

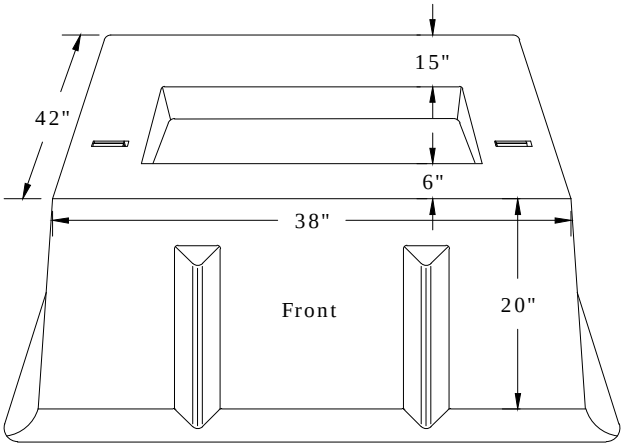

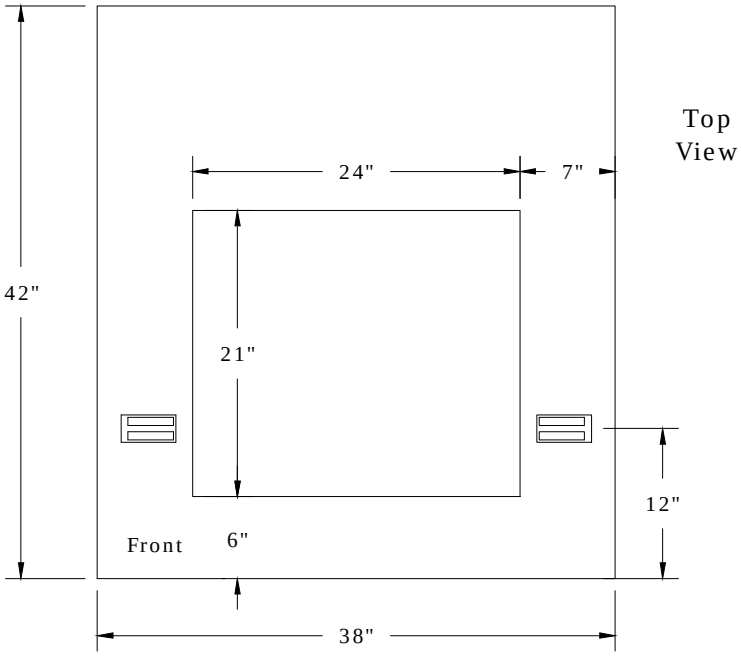

ITEM NO.	DESCRIPTION	QTY.	S/N
1	Box Pad, 1Ø Transformer, Fiberglass	1	2433

Clark Public Utilities

CONSTRUCTION STANDARDS

SINGLE PHASE
PADMOUNT TRANSFORMER
BOXPAD (BASEMENT)

REVISIONS

R	DATE	ENGR	OPS

PAGE: 1 of 1

UTB

CAD FILE: UTB

APP: KJP

DATE: 12/29/04

SECTION 1400

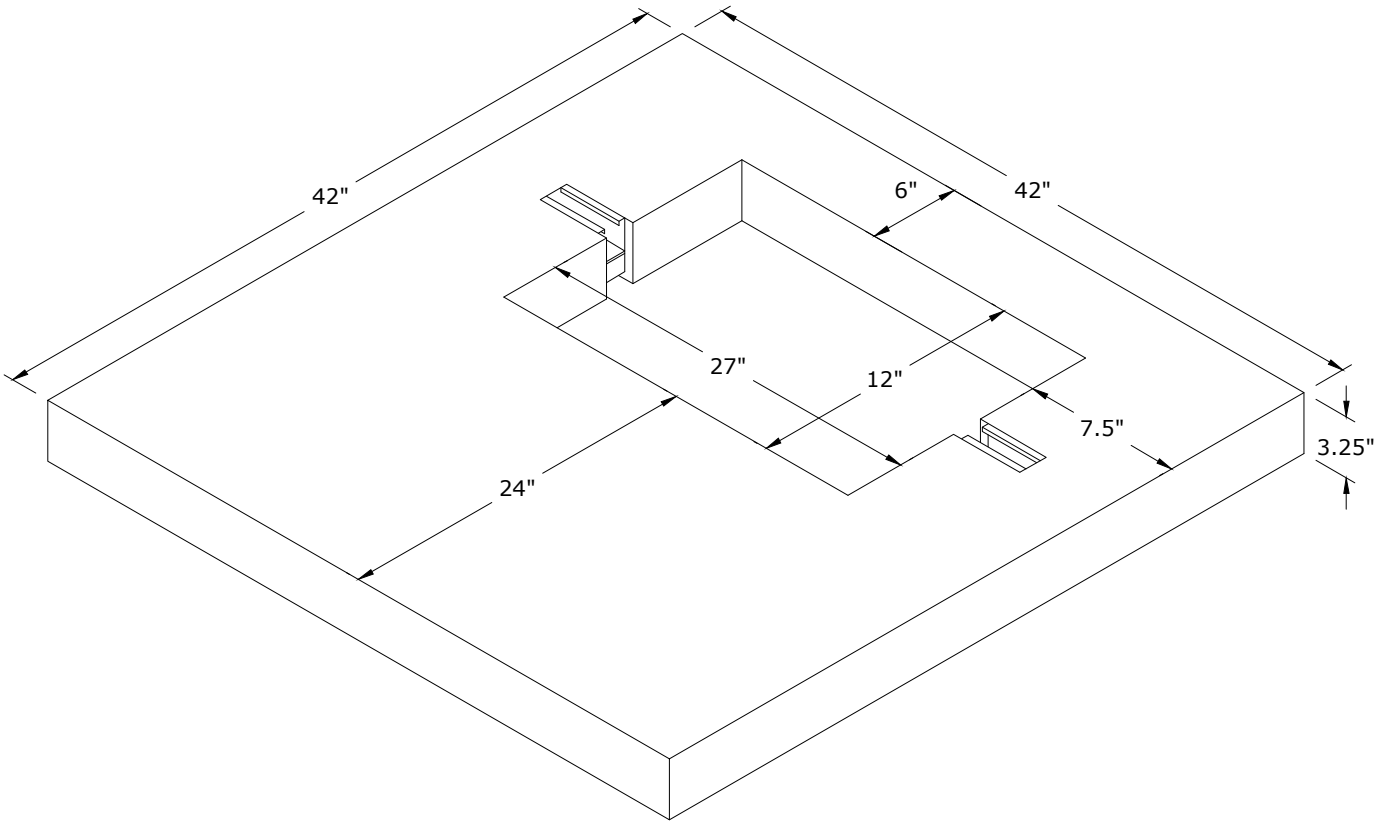

Note: See Std UTP3 - 1Ø Transformer Pad Orientation and Conduit Installation 25-75kVA (page 1) - for installation instructions. ☼

Rev. 2 - Changed from plastic pad to polyconcrete, updated note, and added material issue.

ITEM NO.	DESCRIPTION	UTP1 QTY.	UTP1 S/N
1	Pad, Transformer, 42" x 42", 1Ø, 25-75kVA	1	929

Clark Public Utilities

CONSTRUCTION STANDARDS

1Ø TRANSFORMER PAD
25 to 75 kVA

REVISIONS

R	DATE	ENGR	OPS
1	2/23/00	HWH	MA
2	12/9/20	CM	GM

PAGE: 1 of 1

UTP1

CAD FILE: UTP1

APP: HWH/GW
DATE: 1/22/80

SECTION 1400

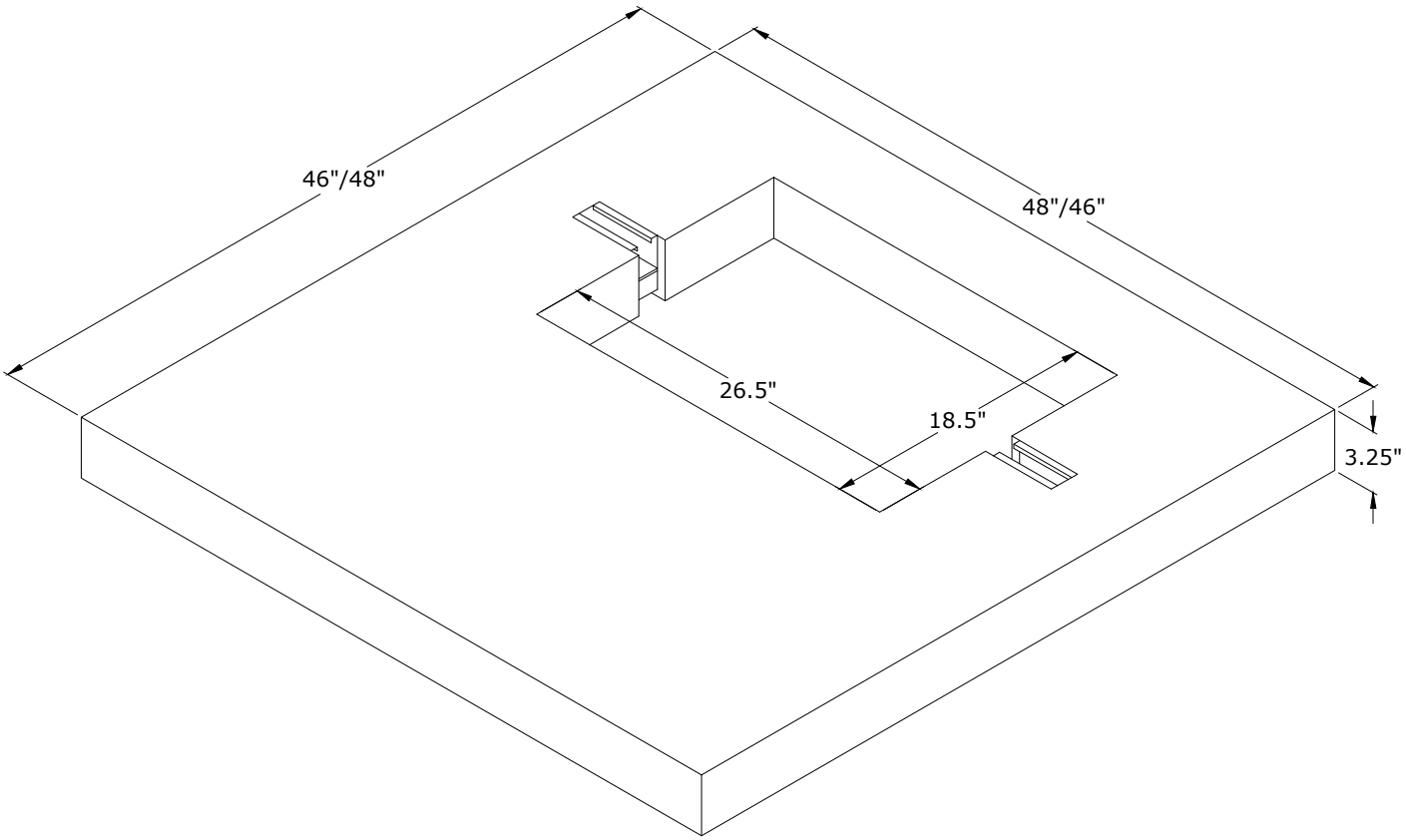

Notes: *

1. See Std UTP3 - 1Ø Transformer Pad Orientation and Conduit Installation 100KVA (page 2) - for installation instructions.
2. Armorcast pad is 48" W x 46" L. Quazite pad is 46" W x 48" L.

Rev. 2 - Updated drawing, notes, and added material issue.

ITEM NO.	DESCRIPTION	UTP2 QTY.	UTP2 S/N
1	Pad, Transformer, 48" x 46", 1Ø, 100kVA only	1	930

Clark Public Utilities

CONSTRUCTION STANDARDS

1Ø TRANSFORMER PAD
100 kVA

REVISIONS

R	DATE	ENGR	OPS
1	2/23/00	HWH	MA
2	12/9/20	CM	GM

PAGE: 1 of 1

UTP2

CAD FILE: UTP2

APP: HWH/GW
DATE: 1/22/80

SECTION 1400

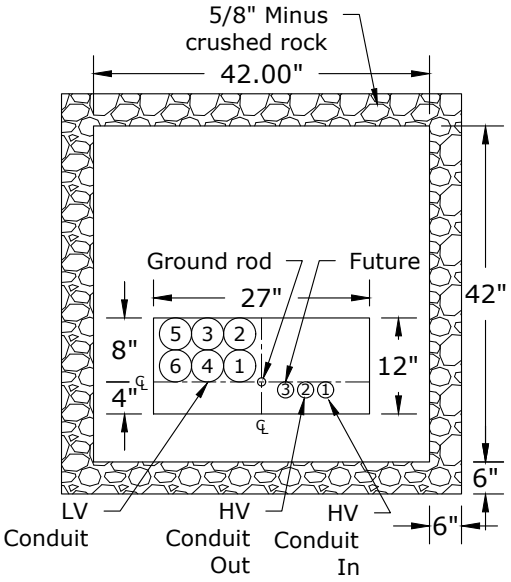

25-75 KVA PAD
PLAN VIEW

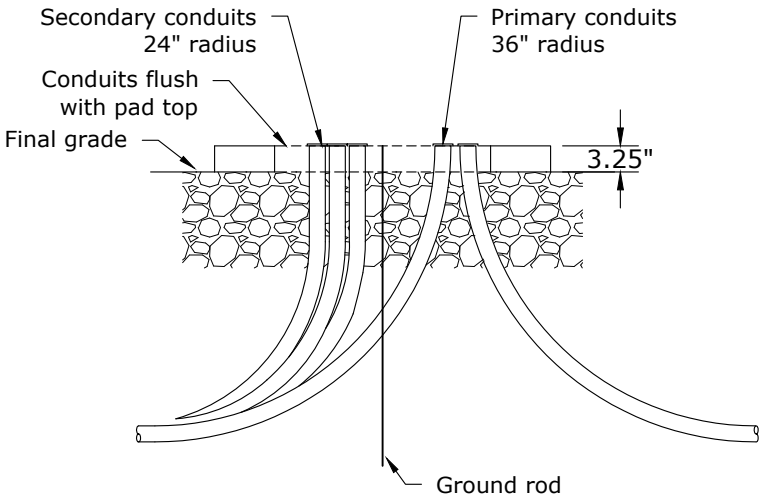

FRONT VIEW

1Ø PADMOUNT TRANSFORMER CONDUIT ORIENTATION (25-75 KVA)

Notes:

1. AIC for 25 to 75 kVA transformers is 10,000 A.
2. High and low voltage conduits must be within their designated areas.
3. All conduits shall be in place and approved prior to transformer installation.
4. It shall be the responsibility of the owner or owner's representative to comply with all applicable code requirements.
5. The pad shall be furnished by the customer.
6. The front side must have 10 feet clear access for maintenance. See Std UTPC - Padmount Transformer Clearances.
7. All future conduit ends shall extend past the edge of the pad by 48 inches minimum.
8. Radius of secondary conduit elbow shall be 24 or 36 inches.
9. Depth of burial of conduits shall be as shown on Std UA1.
10. The pad shall be located so that no part of the transformer is closer than 10 feet to a combustible surface, windows or doors, or 3 feet to a non-combustible structure. See clearances in CPU Residential Handbook.
11. Minimum primary conduit size shall be 2 inches.
12. Backfill under the transformer pad must be 5/8" minus crushed rock compacted in multiple lifts. The rock layer must be a minimum of 12-inches thick below the pad. Soil stability may require more. The rock base shall extend 6 inches beyond the pad on all four sides.
13. All conduit terminations shall have end bells or bushings on UC1, note 6.

Rev. 3 - Updated conduit orientation drawing

Clark Public Utilities

CONSTRUCTION STANDARDS

1Ø TRANSFORMER PAD ORIENTATION
AND CONDUIT INSTALLATION
25-75 KVA

REVISIONS

R	DATE	ENGR	OPS
0	2/23/00	HWH	MA
1	1/26/04	LB	AH
2	12/9/20	CM	GM
3	2/11/25	CM	GM

PAGE: 1 of 2

UTP3

CAD FILE: UTP3

APP: HWH/GW
DATE: 1/22/80

SECTION 1400

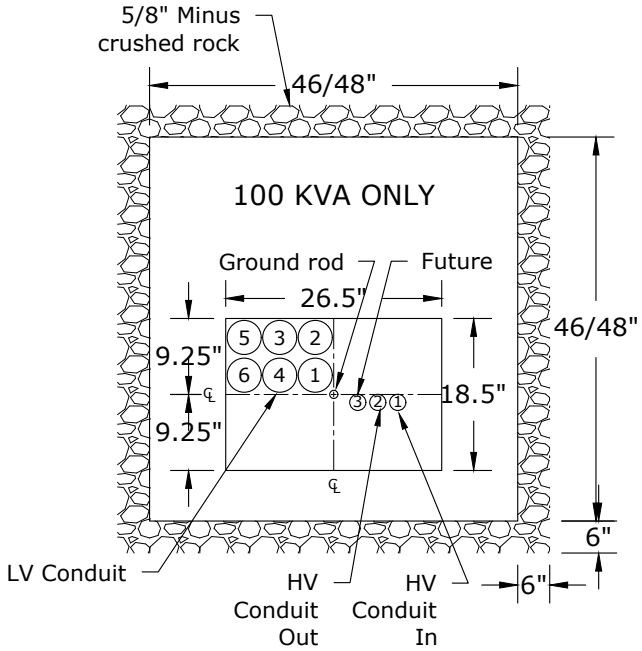

100 KVA PAD
PLAN VIEW

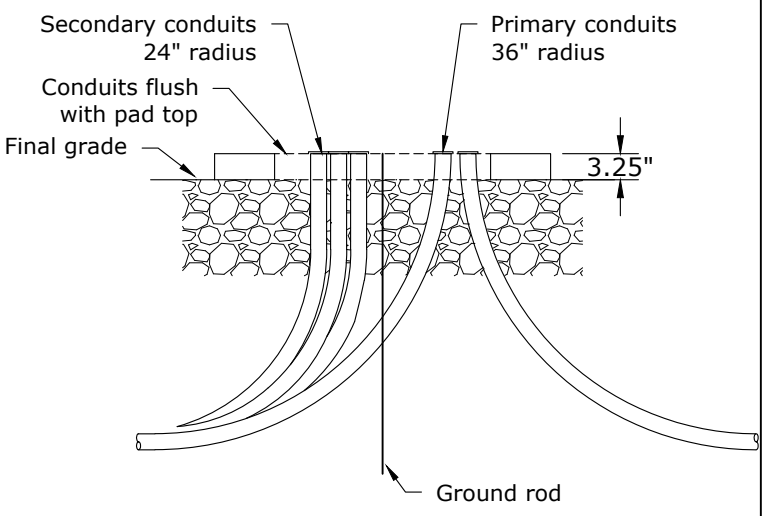

FRONT VIEW

1Ø PADMOUNT TRANSFORMER CONDUIT ORIENTATION (100 KVA)

Notes:

1. AIC for 100 kVA transformer is 14,000 A.
2. High and low voltage conduits must be within their designated areas.
3. All conduits shall be in place and approved prior to transformer installation.
4. It shall be the responsibility of the owner or owner's representative to comply with all applicable code requirements.
5. The pad shall be furnished by the customer.
6. The front side must have 10 feet clear access for maintenance. See Std UTPC - Padmount Transformer Clearances.
7. All future conduit ends shall extend past the edge of the pad by 48 inches minimum.
8. Radius of secondary conduit elbows shall be 24 or 36 inches.
9. Depth of burial of conduits shall be as shown on Std UA1.
10. The pad shall be located so that no part of the transformer is closer than 10 feet to a combustible surface, windows or doors or 3 feet to a non-combustible structure. See clearances in CPU Residential Handbook.
11. Minimum primary conduit size shall be 2 inches.
12. Backfill under the transformer pad must be 5/8" minus crushed rock compacted in multiple lifts. The rock layer must be a minimum of 12-inches thick below the pad. Soil stability may require more. The rock base shall extend 6 inches beyond the pad on all four sides.
13. All conduit terminations shall have end bells or bushings on UC1, note 6.

Rev. 3 - Updated conduit orientation drawing

Clark Public Utilities

CONSTRUCTION STANDARDS

1Ø TRANSFORMER PAD ORIENTATION
AND CONDUIT INSTALLATION
100 KVA

REVISIONS

R	DATE	ENGR	OPS
0	2/23/00	HWH	MA
1	1/26/04	LB	AH
2	12/9/20	CM	GM
3	2/11/25	CM	GM

PAGE: 2 of 2

UTP3

CAD FILE: UTP3

APP: HWH/GW
DATE: 1/22/80

SECTION 1400

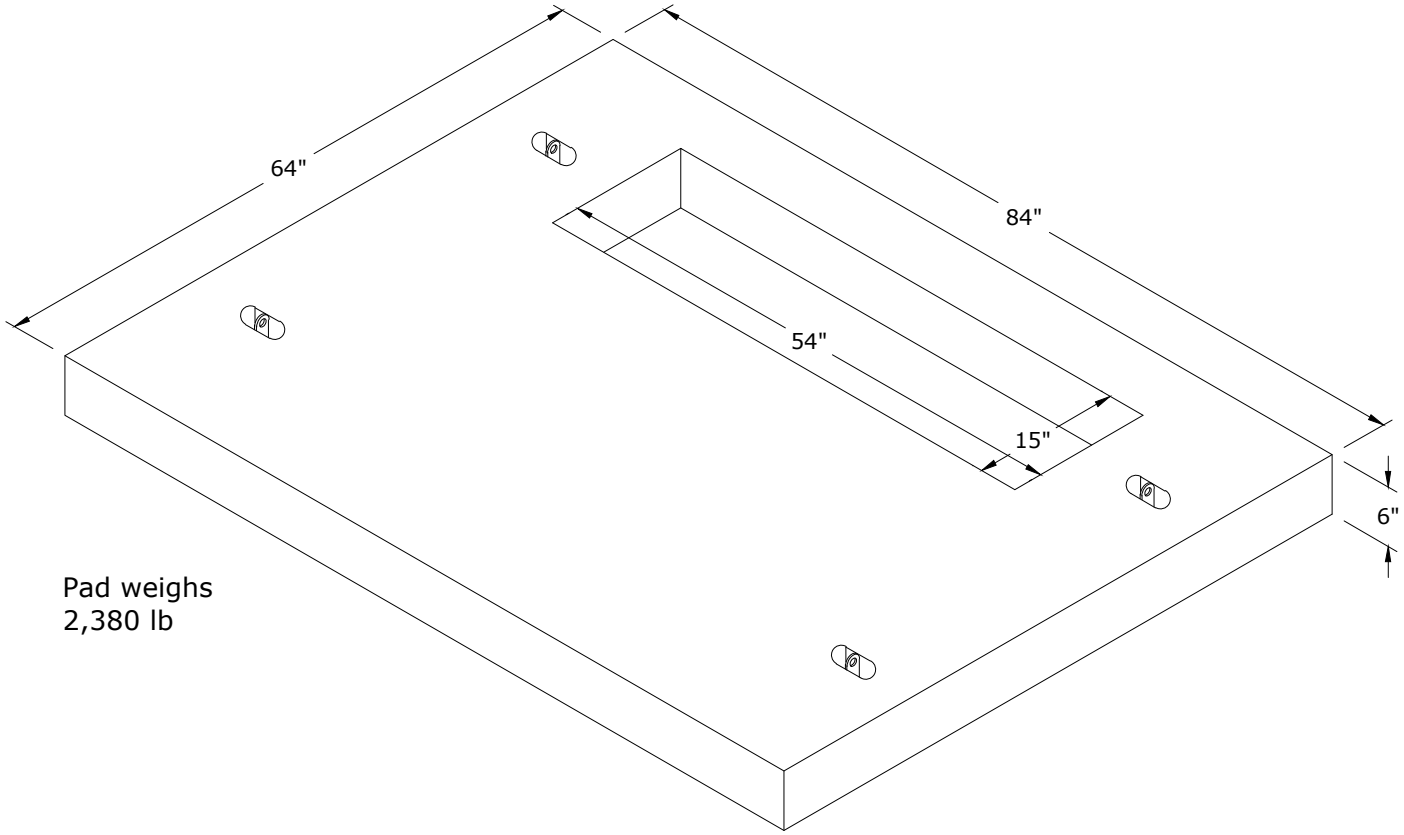

Pad weighs
2,380 lb

Notes:

1. This pad is available from Utility Vault/OldCastle catalog #UTP4 (CPU S/N 2170).
2. This pad is adequate up to 6 conductors per phase. See Std UTP5 - Precast Pad and Vault for 3Ø Transformers - if more conductors are required.
3. See Std UPT6 - 3Ø Transformer Pad Orientation and Conduit Installation - for installation instructions.

Rev. 2 - Updated dimensions, added weight, and removed reinforcement detail.

Clark Public Utilities

CONSTRUCTION STANDARDS

3Ø TRANSFORMER PAD
75 to 1500 kVA

REVISIONS

R	DATE	ENGR	OPS
0	2/23/00	HWH	MA
1	8/17/03	LB	DK
2	12/9/20	CM	GM

PAGE: 1 of 1

UTP4

CAD FILE: UTP4

APP: HWH/GW
DATE: 1/22/80

SECTION 1400

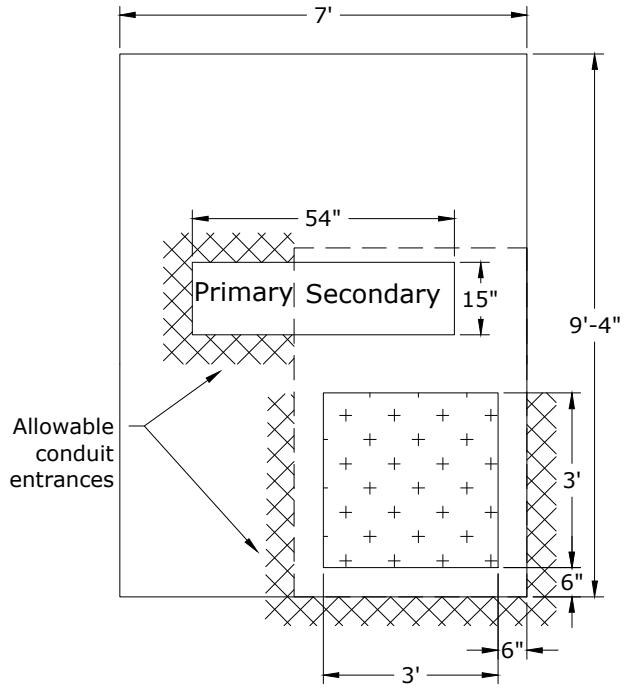

Top View

Materials:

1. Vault 6' x 4' x 3'-6" - Oldcastle Part #644LA
2. Pad 7' x 9'-4" x 8" with 15" x 54" opening - Oldcastle Part #0370133.

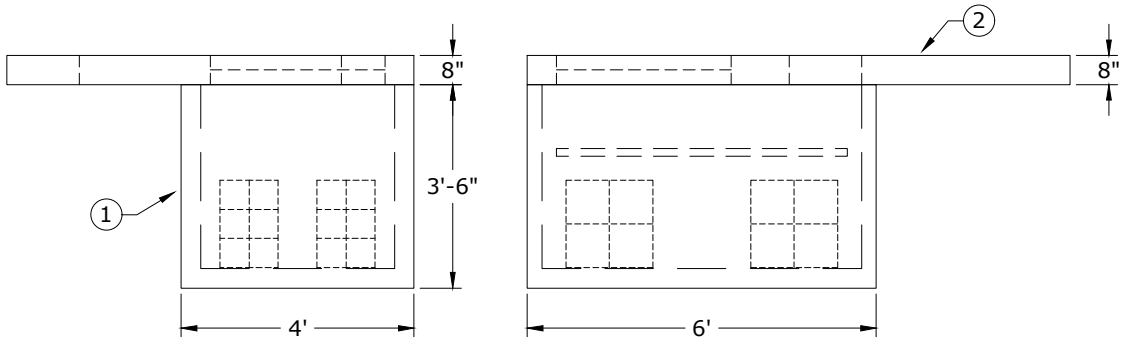

Front View

Side View

Notes:

1. Locking bolts shall be 1/2" pentahead bolt.
2. Backfill under the vault and transformer pad must be 5/8" minus crushed rock compacted in lifts. The rock layer must be a minimum of 12-inches thick below the pad and vault. Soil stability may require more. The rock base shall extend 6 inches beyond the pad on all four sides.
3. Customer shall install both components shown. All secondary conduits go into 644 vault and enter only in the areas shown. All secondary cables shall have a minimum 10 feet of excess in vault for makeup.
4. All primary conduits shall enter the pad from outside of the vault and only in the locations shown.
5. This pad and vault are required if more than 6 cables per leg are being installed. The maximum number of secondary runs is 8.
6. Install bell ends in conduit in knockouts and grout inside and outside to be even with vault walls.

Rev. 1 - Renamed from UTP4-6, and updated drawing.

Clark Public Utilities

CONSTRUCTION STANDARDS

PRECAST PAD AND VAULT
FOR 3Ø TRANSFORMERS

REVISIONS

R	DATE	ENGR	OPS
1	12/9/20	CM	GM

PAGE: 1 of 1

UTP5

CAD FILE: UTP5

APP: GW

DATE: 12/18/87

SECTION 1400

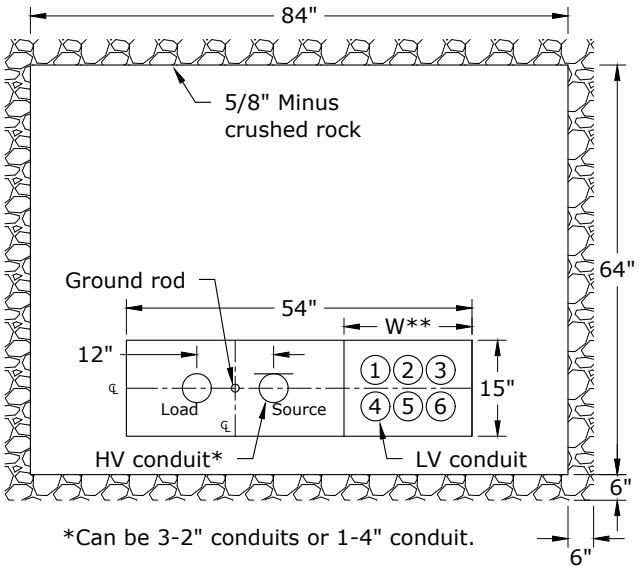

*Can be 3-2" conduits or 1-4" conduit.

KVA	TYPICAL** "W" INCHES
75 - 300	20
500	22
750 - 1500	28

**Varies by manufacturer

PLAN VIEW

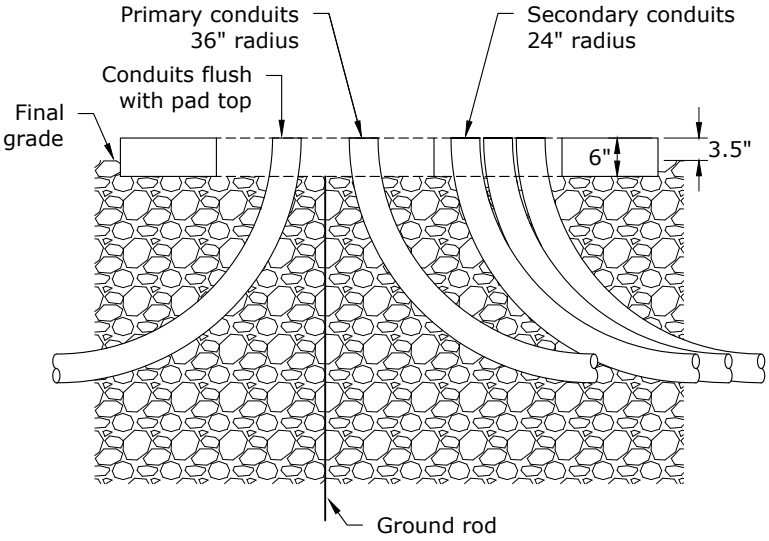

FRONT VIEW

3Ø Padmount Transformer Conduit Orientation

Notes:

1. The concrete pad and all conduits shall be in place and approved by the CPU Inspector prior to transformer installation.
2. Refer to Std UPTC - Padmount Transformer Clearances - and the CPU Commercial Handbook for clearances.
3. See Std UTP4 - 3ø Transformer Pad 75 to 1500 kVA - for concrete pad details.
4. Backfill under the transformer pad must be 5/8" minus crushed rock compacted in multiple lifts. The rock layer must be a minimum of 12-inches thick below the pad. Soil stability may require more. The rock base shall extend 6 inches beyond the pad on all four sides.

Rev 6. - Clarified LV conduit placement.

Clark Public Utilities

CONSTRUCTION STANDARDS

3Ø TRANSFORMER PAD ORIENTATION AND CONDUIT INSTALLATION

REVISIONS

R	DATE	ENGR	OPS
3	1/26/04	LB	AH
4	12/29/04	LB	AH
5	12/9/20	CM	GM
6	2/11/25	CM	GM

PAGE: 1 of 1

UTP6

CAD FILE: UTP6

APP:

DATE: 10/98

SECTION 1400

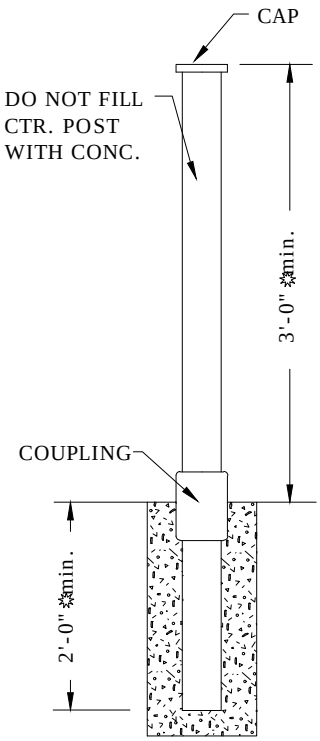

DETAIL "A"

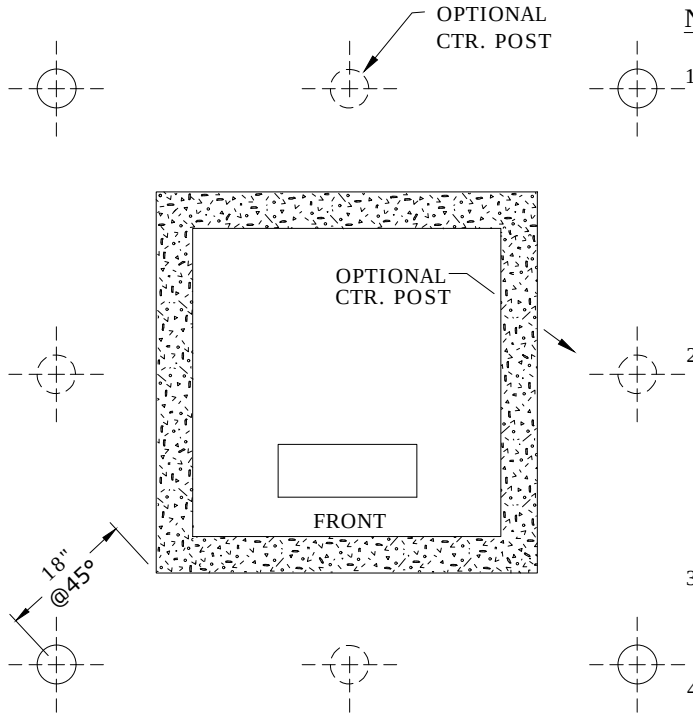

DETAIL "A"

PLAN VIEW
TYPICAL PAD

Notes:

1. Typical locations of barriers positioning will vary depending on the following conditions.
   a. Physical location of equipment with respect to hazards.
   b. Type of equipment to be protected and accessibility required.
2. If distance between corner barriers exceeds 5 ft., A ctr. post may be required similar to corner post except center post on front side of padmount device may be constructed as det. "A".
3. Project Engineer will determine and indicate number, size, and position of barrier posts.
4. Posts of 4" steel pipe, concrete-filled or substitute of equal strength to be set in concrete. Use same mixture as pad.
5. See WAC 296-46-480 Para. 4, rules and regulations for installing electric wires and equipment.

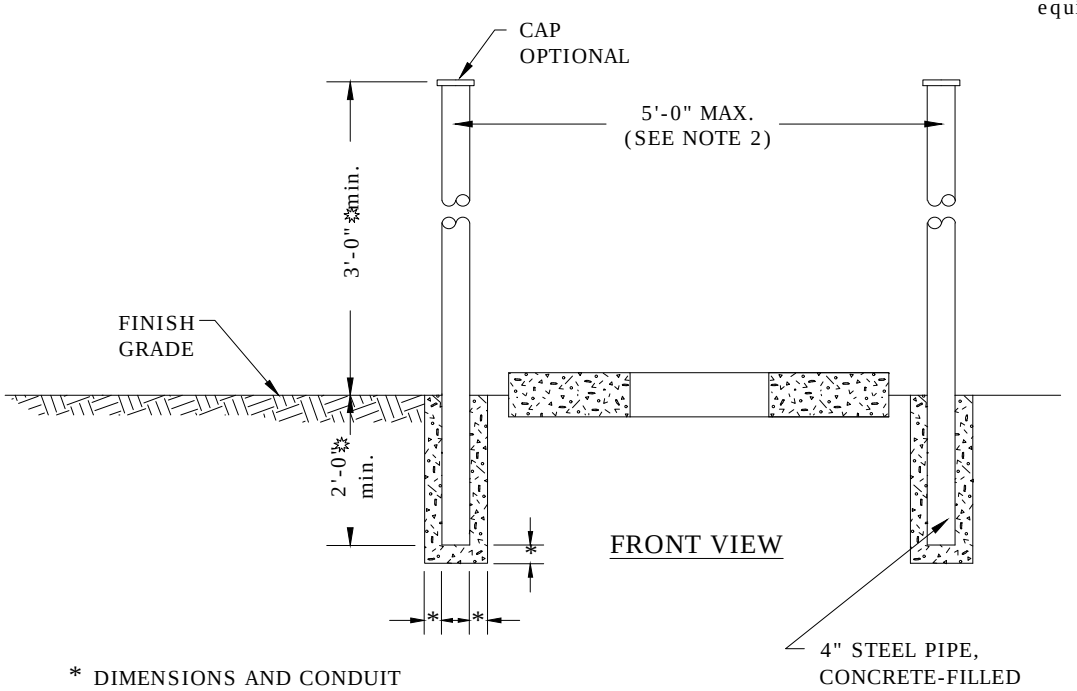

FRONT VIEW

* DIMENSIONS AND CONDUIT SIZE TO BE PROVIDED BY PROJECT ENGINEER.

Rev 2: Corrected dimensions on barrier to match Commercial Electric Service Handbook.

Clark Public Utilities

CONSTRUCTION STANDARDS

TYPICAL BARRIER INSTALLATION TO PROTECT PADMOUNTED EQUIPMENT

REVISIONS

R	DATE	ENGR	OPS
0	2/23/00	HWH	MA
1	5/30/07	LB	AH
2	12/14/09	KJP	

PAGE:		CAD FILE:	APP:	SECTION
1 of 1	UTP9	UTP9	DATE: 9/94	1400

1500
UNDERGROUND J-BOXES & VAULTS

3/14/2023

~	UJ1	1Ø Junction Box 4-Way
~	UJ2	1Ø Junction Box 5-Way
~	UJ3	3Ø Junction Box 4-Way
~	UJ3F	3Ø Junction Box 4-Way Flush-Mount
~	UJ4	3Ø Junction Box 5-Way
~	UJM	Primary Junction Box 1Ø & 3Ø Material List
~	UJMP	Junction Box Marker
~	ULE	Loop Enclosure

N New Standard
R Redrawn Standard
C Changed Standard
~ No Change

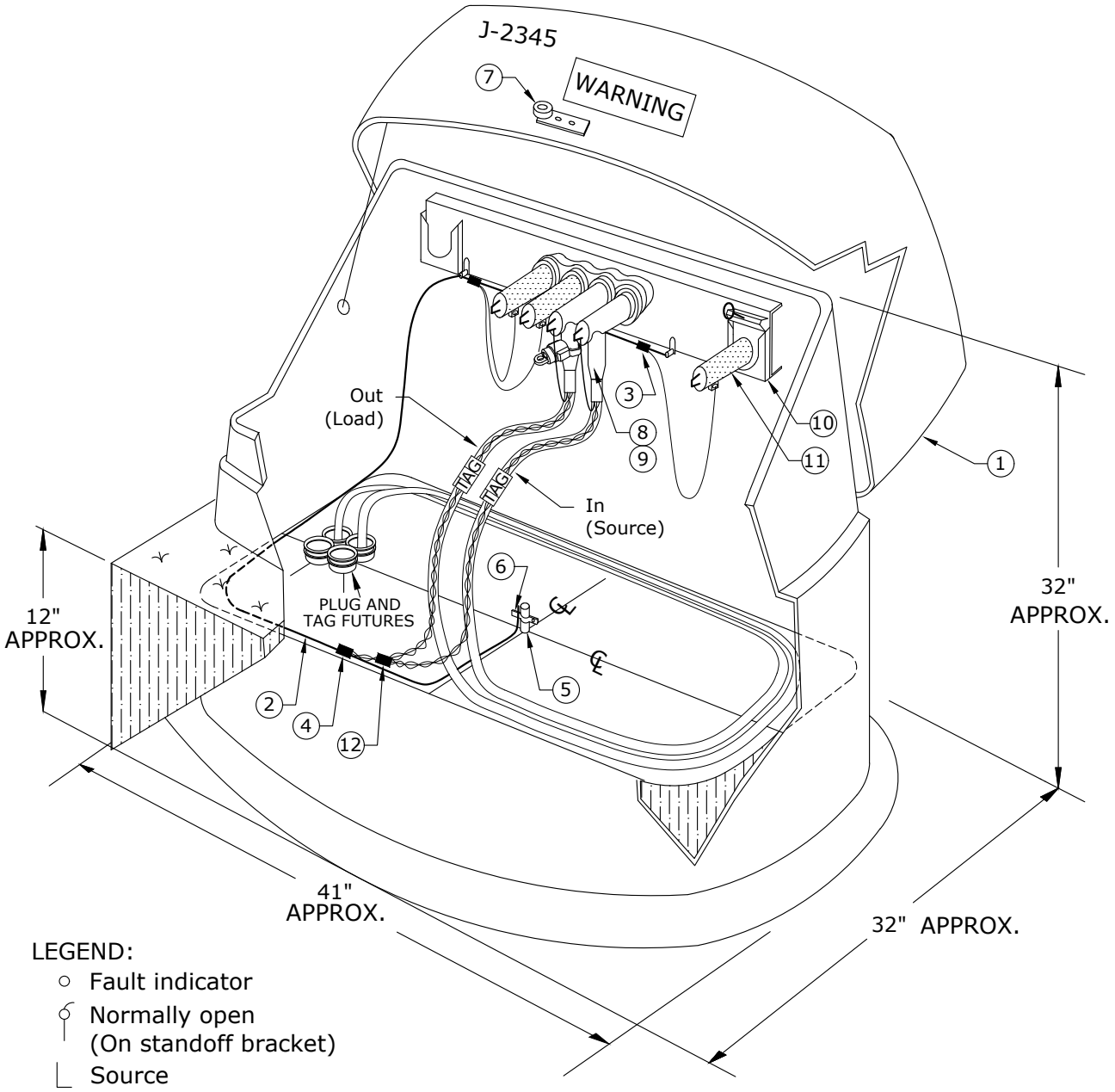

Rev. 5 - Added "Plug and Tag Future Conduits" to drawings, added Notes #4-6, and corrected material issue.

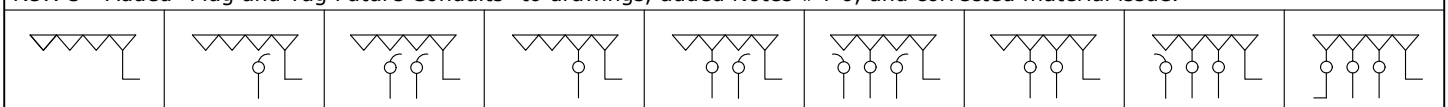

UJM4	UJM41	UJM42	UJM44	UJM45	UJM46	UJM47	UJM48	UJM49

ITEM NO.	DESCRIPTION	QTY	S/N
1	Box, Junction, 1Ø, Fiberglass w/LBC4 Installed	1	194
2	Conductor, Cu, #4 Solid, 1C, Bare, Soft-Drawn	15	376
3	Connector, Crimpet, Cu, Run & Tap #6 Sol - #4 Str (4C4)	3	450
4	Connector, Crimpet, Cu, Run #4 Sol - #2 Str, Tap #8 Sol - #4 Str (2C4)	1	454
5	Rod, Ground 5/8" x 8'	1	1124
6	Clamp, Ground Rod, 5/8", Bronze, Small	1	281
7	Lock, Equipment, UG	1	837

Clark Public Utilities

CONSTRUCTION STANDARDS

1Ø JUNCTION BOX
4-WAY

REVISIONS

R	DATE	ENGR	OPS
2	9/23/04	LB	AH
3	12/29/04	LB	AH
4	4/29/09	CM	AH
5	3/12/20	CM	GM

PAGE: 1 of 2

UJ1

CAD FILE: UJ1

APP: HWH/GGW

DATE: 1/22/80

SECTION 1500

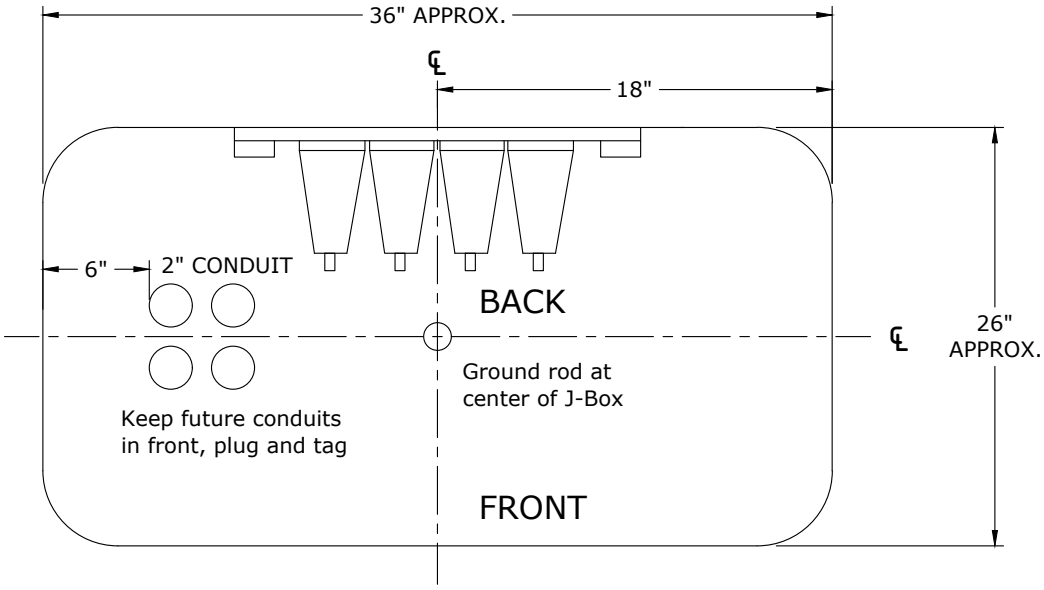

Plan View 1-Phase J-Box

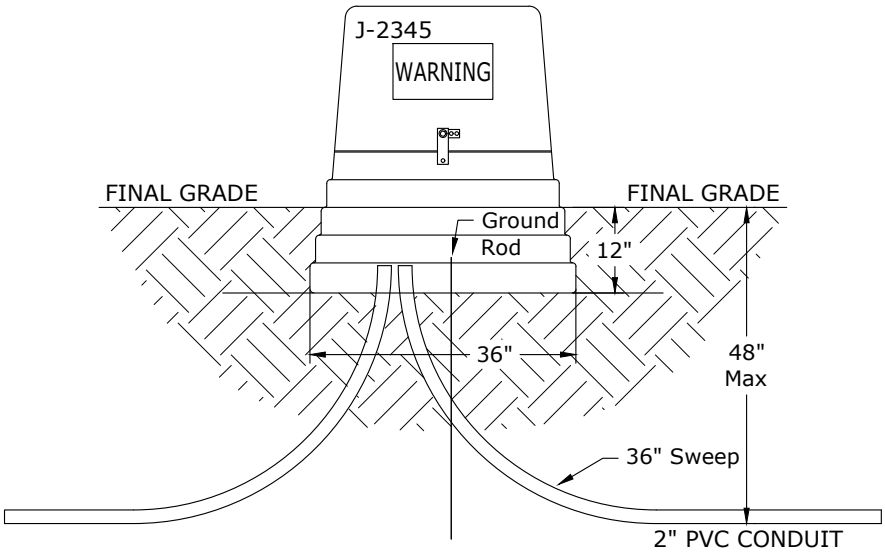

Primary J-Box Conduit Arrangement

Notes:

1. Typical elbow arrangement is shown.
2. Do not put dirt inside junction box. Space is required for cable slack and operating clearance.
3. Leave cable slack for future operations.
4. Future conduits shall be plugged w/
   S/N 2697- 2" plastic conduit plug, or
   S/N 2698- 4" plastic conduit plug.
5. Futures should be tagged with direction and length of conduit. See Std UID2.
6. Proof conduit and install sequentially numbered, 2500 lb mule tape in all futures.

Rev. 5 - Added "Plug and Tag Future Conduits" to drawings, added Notes #4-6, and corrected material issue.

Clark Public Utilities

CONSTRUCTION STANDARDS

1Ø JUNCTION BOX
4-WAY

REVISIONS

R	DATE	ENGR	OPS
2	9/23/04	LB	AH
3	12/29/04	LB	AH
4	4/29/09	CM	AH
5	3/12/20	CM	GM

PAGE: 2 of 2

UJ1

CAD FILE: UJ1

APP: HWH/GGW

DATE: 1/22/80

SECTION 1500

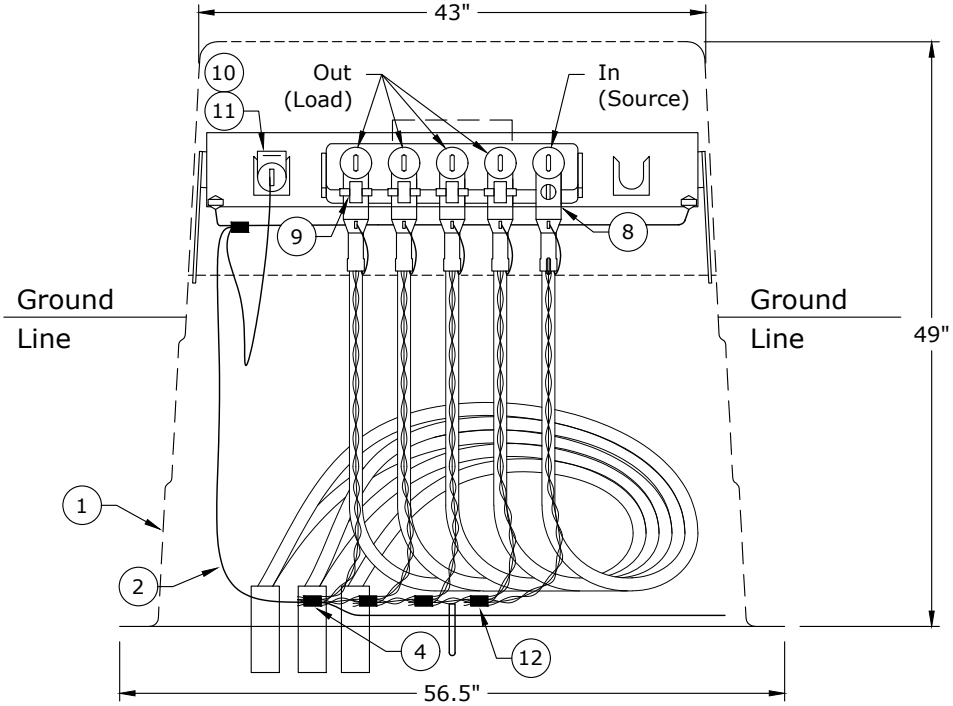

Front View

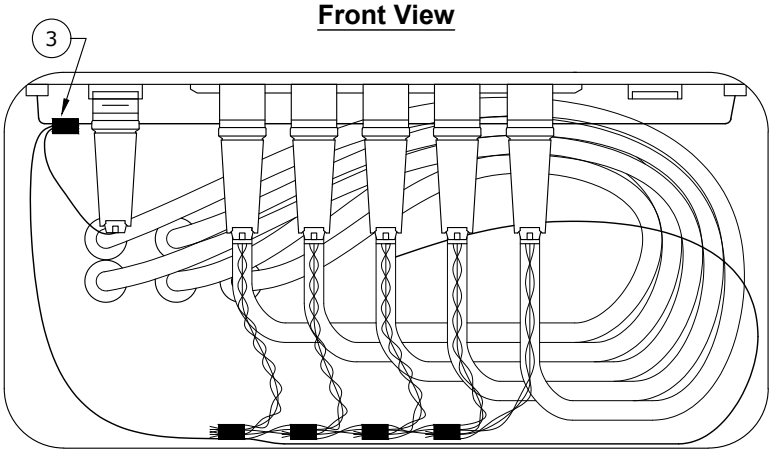

Top View

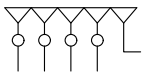

UJM5

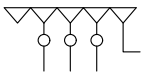

UJM51

LEGEND:
- ○ Fault indicator
- └ Source

ITEM	DESCRIPTION	QTY	S/N
1	Box, Jct., 1ø, Fiberglass w/ LBC5 and 200A bushing inserts installed	1	2940
2	Conductor, Cu, #4 Sol, 1C, Bare, Soft Drawn	25	376
3	Connector, Crimpet, Cu, Run & Tap #6 Sol - #4 Str (4C4)	1	450
4	Connector, Crimpet, Cu, Run #4 Sol - #2 Str, Tap #8 Sol - #4 Str (2C4)	1	454
5	Rod, Ground 5/8" x 8'	1	1124
6	Clamp, Ground Rod 5/8", Bronze, Small	1	281
7	Lock, Equipment UG	1	837

Clark Public Utilities

CONSTRUCTION STANDARDS

1Ø JUNCTION BOX
5-WAY

REVISIONS

R	DATE	ENGR	OPS

PAGE: 1 of 2

UJ2

CAD FILE: UJ2

APP: CM/GM
DATE: 3/12/20

SECTION 1500

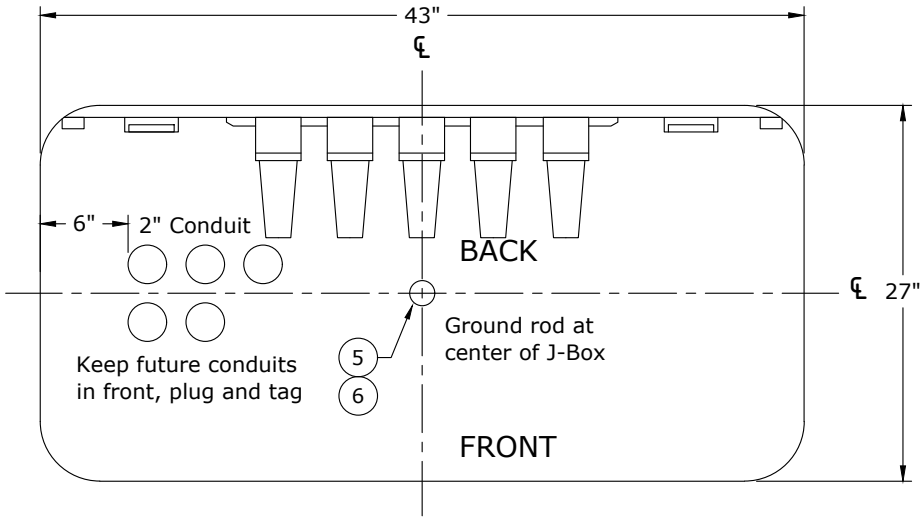

Plan View

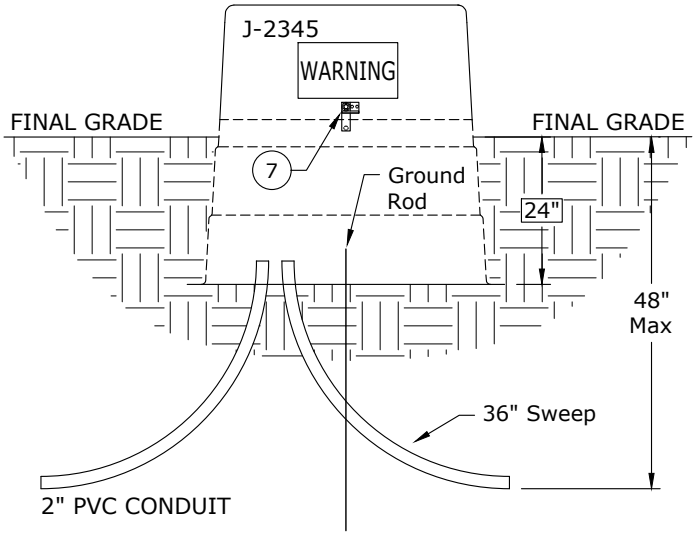

Primary J-Box Conduit Arrangement

Notes:

1. Typical elbow arrangement is shown.
2. Do not put dirt inside junction box. Space is required for cable slack and operating clearance.
3. Leave cable slack for future operations.
4. Future conduits shall be plugged with
   S/N 2697 - 2" plastic conduit plug, or
   S/N 2698 - 4" plastic conduit plug.
5. Futures should be tagged with direction and length of conduit. See Std UID2.
6. Proof conduit and install sequentially numbered, 2500 lb mule tape in all futures.

Clark Public Utilities

CONSTRUCTION STANDARDS

1Ø JUNCTION BOX
5-WAY

REVISIONS			
R	DATE	ENGR	OPS

PAGE:		CAD FILE:	APP: CM/GM	SECTION
2 of 2	UJ2	UJ2	DATE: 3/12/20	1500

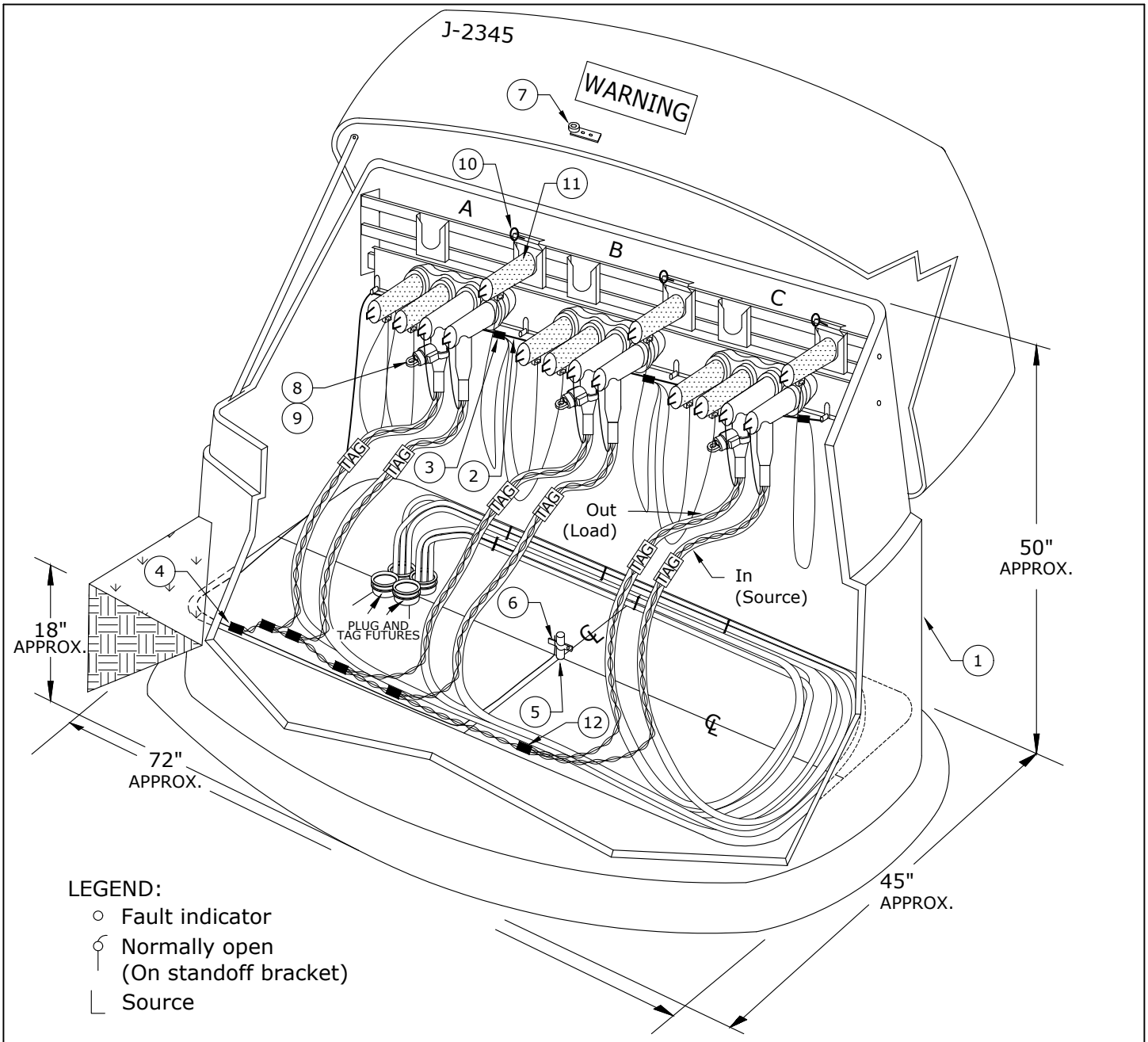

Rev. 4 - Added "Plug and Tag Future Conduits" to drawings and Notes #4 - #6.

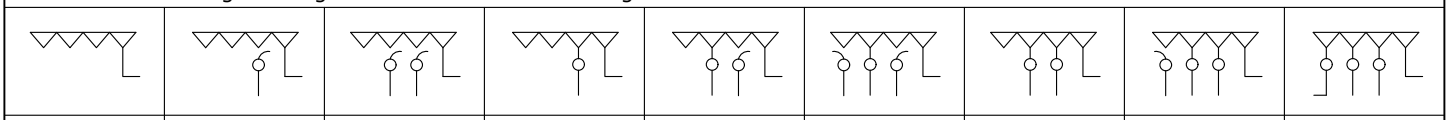

UJM4	UJM41	UJM42	UJM44	UJM45	UJM46	UJM47	UJM48	UJM49

ITEM NO.	DESCRIPTION	QTY	S/N
1	Box, Junction, 3Ø, Fiberglass w/LBC4 Installed, 49" High	1	2047
2	Conductor, Cu, #4 Solid, 1C, Bare, Soft-Drawn	25	376
3	Connector, Crimpet, Cu, Run & Tap #6 Sol - #4 Str (4C4)	5	450
4	Connector, Crimpet, Cu, Run #4 Sol - #2 Str, Tap #8 Sol - #4 Str (2C4)	1	454
5	Rod, Ground 5/8" x 8'	1	1124
6	Clamp, Ground Rod, 5/8", Bronze, Small	1	281
7	Lock, Equipment, UG	1	837

Clark Public Utilities

CONSTRUCTION STANDARDS

3Ø JUNCTION BOX
4-WAY

REVISIONS

R	DATE	ENGR	OPS
1	9/23/04	LB	AH
2	12/29/04	LB	AH
3	4/29/09	CM	AH
4	3/12/20	CM	GM

PAGE: 1 of 2

UJ3

CAD FILE: UJ3

APP: HWH/GGW

DATE: 1/22/80

SECTION 1500

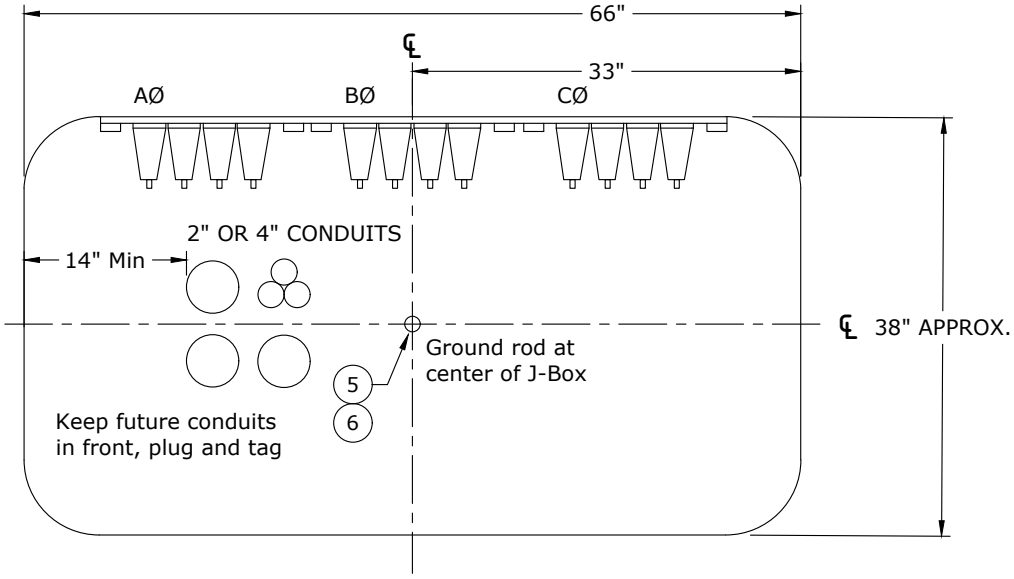

Plan View 3-Phase J-Box

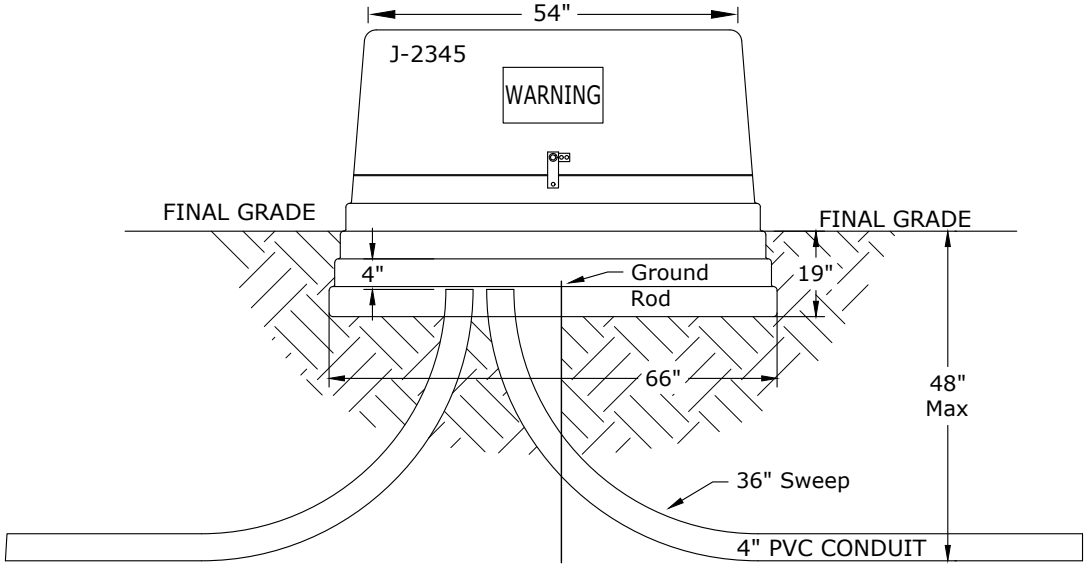

Primary J-Box Conduit Arrangement

Notes:

1. Typical elbow arrangement is shown.
2. Do not put dirt inside junction box. Space is required for cable slack and operating clearance.
3. Leave cable slack for future operations.
4. Future conduits shall be plugged w/
   S/N 2697- 2" plastic conduit plug, or
   S/N 2698- 4" plastic conduit plug.
5. Futures should be tagged with direction and length of conduit. See Std UID2.
6. Proof conduit and install sequentially-numbered, 2500 lb, mule tape in all futures.

Rev. 4 - Added "Plug and Tag Future Conduits" to drawings and Notes #4 - #6.

Clark Public Utilities

CONSTRUCTION STANDARDS

3Ø JUNCTION BOX
4-WAY

REVISIONS

R	DATE	ENGR	OPS
1	9/23/04	LB	AH
2	12/29/04	LB	AH
3	4/29/09	CM	AH
4	3/12/20	CM	GM

PAGE: 2 of 2

UJ3

CAD FILE: UJ3

APP: HWH/GGW

DATE: 1/22/80

SECTION 1500

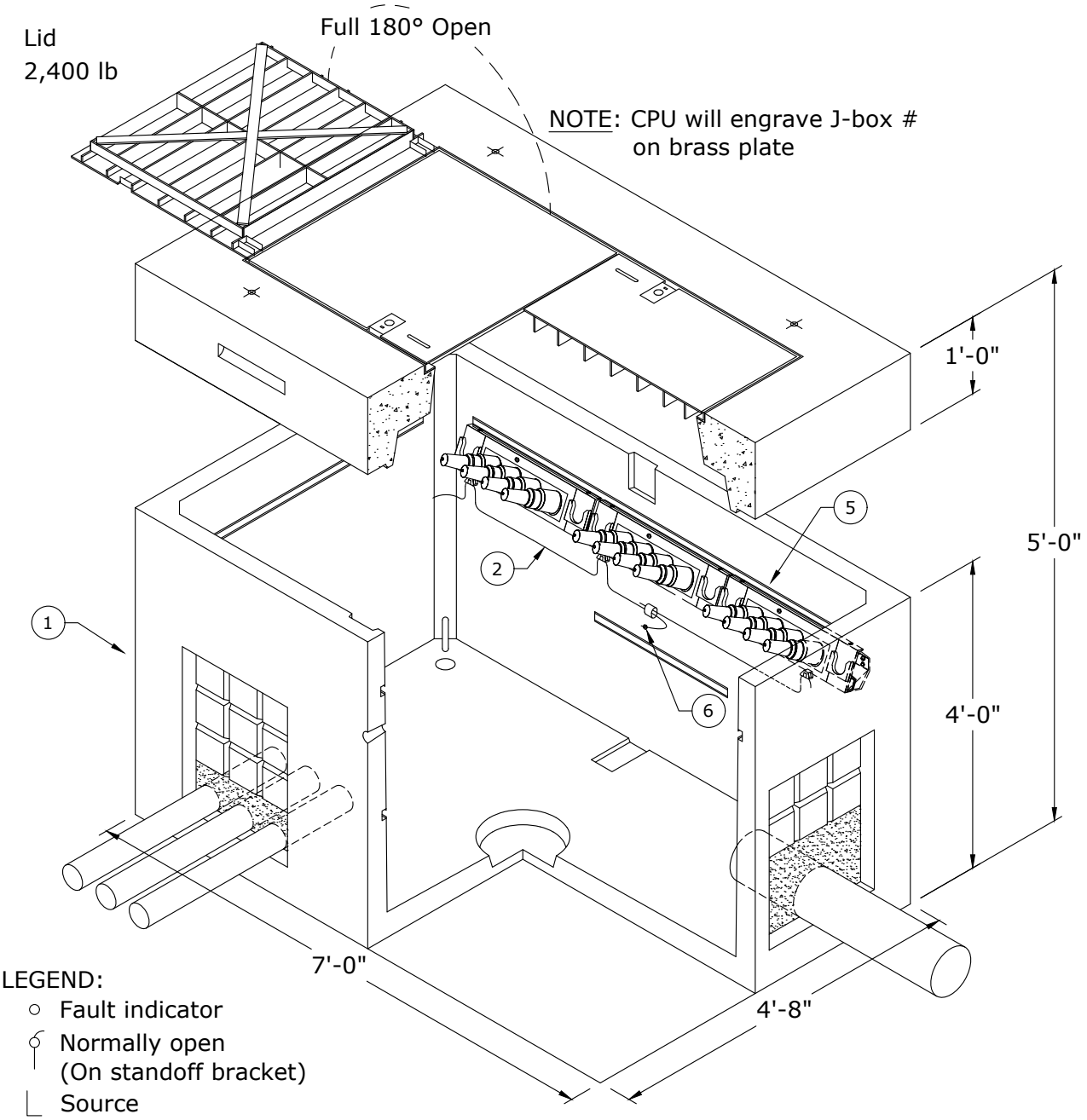

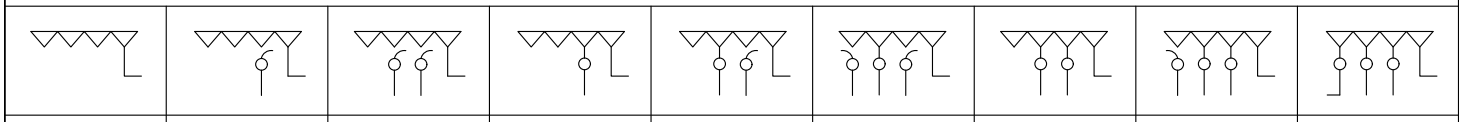

UJM4	UJM41	UJM42	UJM44	UJM45	UJM46	UJM47	UJM48	UJM49

ITEM NO.	DESCRIPTION	QTY	S/N
1	Vault, 575LA, Flush Mount J-box or EE, Ufer Ground, Non-Slip Lid	1	2722
2	Conductor, Cu, #4 Solid, 1C, Bare, Soft-Drawn	30	376
3	Connector, Crimpet, Cu, Run & Tap #6 Sol - #4 Str	7	450
4	Connector, Crimpet, Cu, Run #4 Sol - #2 Str, Tap #8 Sol - #4 Str	1	454
5	Module, LBC4 UG w/Bracket	3	900
6	Lug, Grounding, #8 Sol - 2/0 Str, 4-way	2	842

Clark Public Utilities

CONSTRUCTION STANDARDS

3Ø JUNCTION BOX
4-WAY
FLUSH-MOUNT

REVISIONS

R	DATE	ENGR	OPS
1	12/9/22	CRM	GM

PAGE: 1 of 2

UJ3F

CAD FILE: UJ3F

APP: CM/GM
DATE: 3/12/20

SECTION 1500

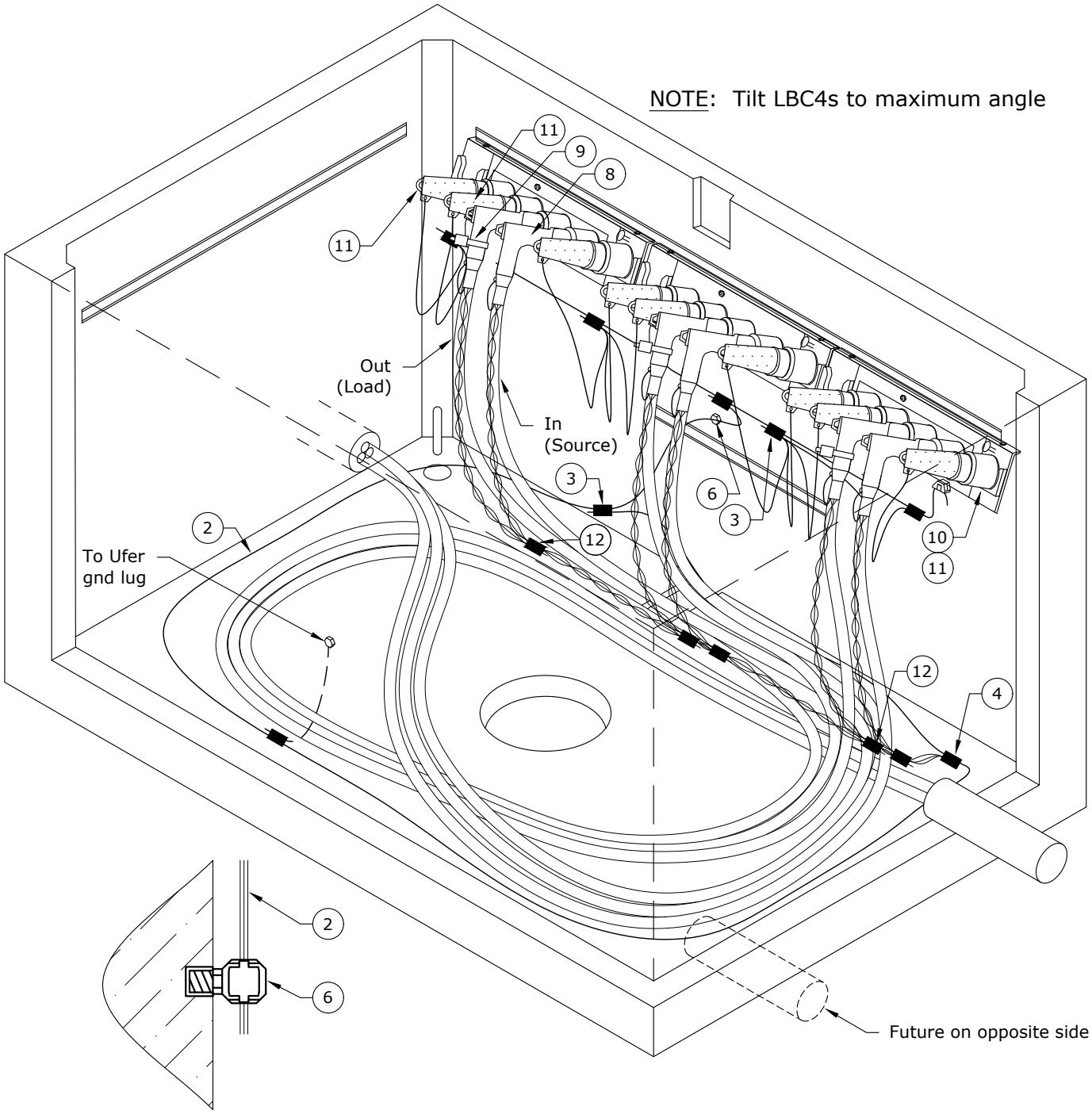

UFER GROUND CONNECTION

Notes:

1. Fully seal knockouts with grout around conduit.
2. Std UJM44 configuration shown in drawing.
3. See Std UJM for cable configurations and material items #8-12.
4. Bring concentrics down on front side of elbows. Leave cable slack for future operations.
5. Future conduits shall be plugged w/
   S/N 2697 - 2" plastic conduit plug, or
   S/N 2698 - 4" plastic conduit plug.
6. Futures should be tagged with direction and length of conduit. See Std UID2.
7. Proof conduit and install sequentially-marked, 2500 lb mule tape in all futures.

Clark Public Utilities

CONSTRUCTION STANDARDS

3Ø JUNCTION BOX
4-WAY
FLUSH-MOUNT

REVISIONS

R	DATE	ENGR	OPS
1	12/9/22	CRM	GM

PAGE: 2 of 2

UJ3F

CAD FILE: UJ3F

APP: CM/GM
DATE: 3/12/20

SECTION 1500

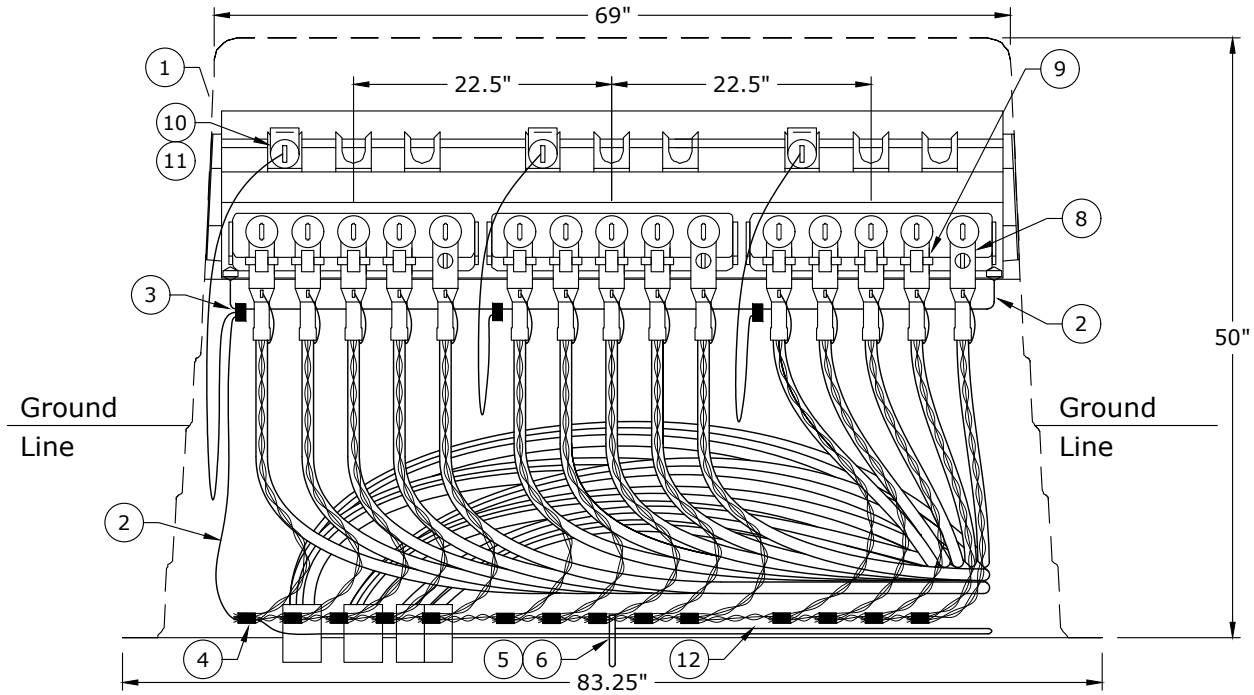

Front View

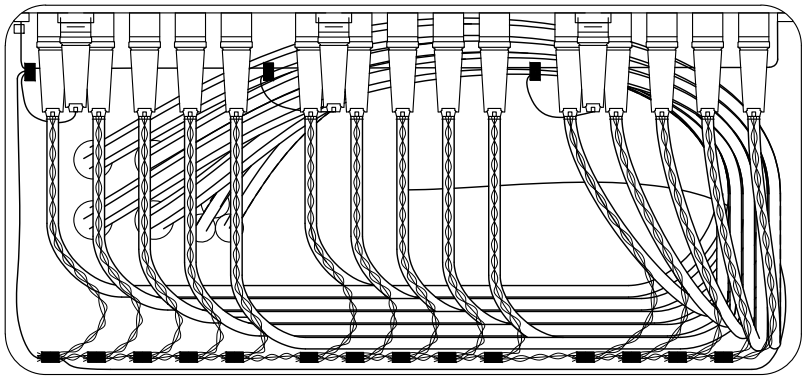

Top View

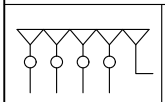

UJM5

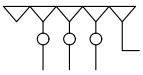

UJM51

LEGEND:
- ○ Fault indicator
- └ Source

ITEM	DESCRIPTION	QTY	S/N
1	Box, Jct., 3ø, Fiberglass w/ LBC5 and 200A bushing inserts installed	1	2941
2	Conductor, Cu, #4 Sol, 1C, Bare, Soft-Drawn	30	376
3	Connector, Crimpet, Cu, Run & Tap #6 Sol - #4 Str (4C4)	3	450
4	Connector, Crimpet, Cu, Run #4 Sol - #2 Str, Tap #8 Sol - #4 Str (2C4)	1	454
5	Rod, Ground, 5/8" x 8'	1	1124
6	Clamp, Ground Rod 5/8", Bronze, Small	1	281
7	Lock, Equipment UG	1	837

Clark Public Utilities

CONSTRUCTION STANDARDS

3Ø JUNCTION BOX
5-WAY

REVISIONS

R	DATE	ENGR	OPS

PAGE: 1 of 2

UJ4

CAD FILE: UJ4

APP: CM/GM
DATE: 3/12/20

SECTION 1500

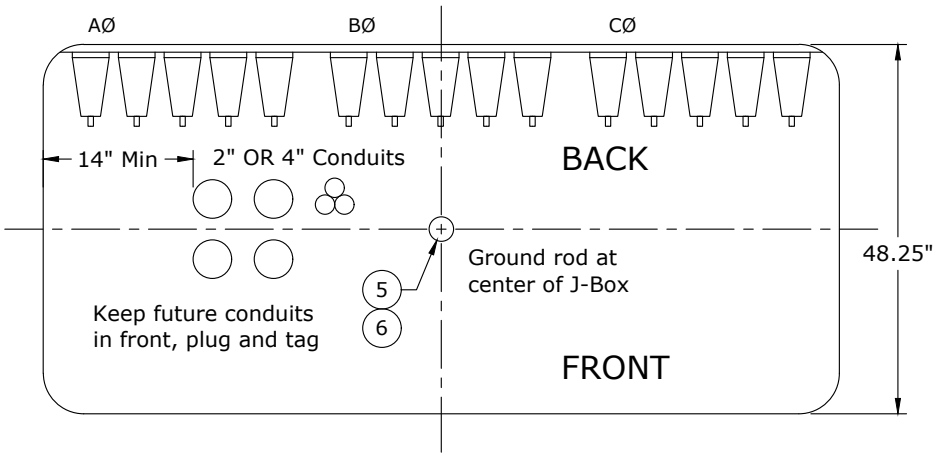

Plan View 3-Phase J-Box

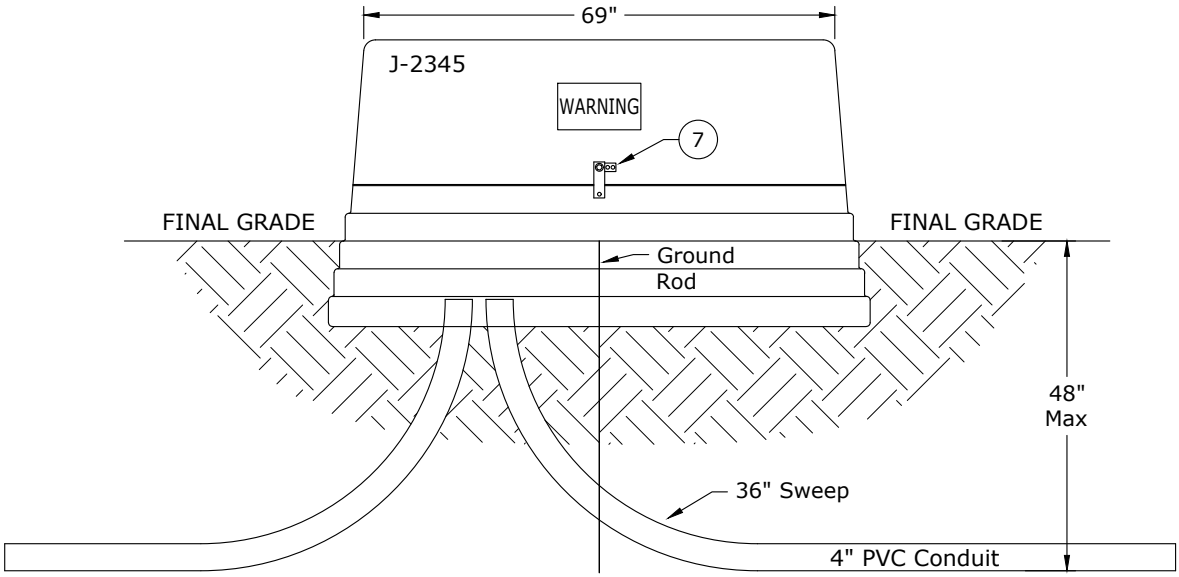

Primary J-Box Conduit Arrangement

Notes:

1. Typical elbow arrangement is shown.
2. Do not put dirt inside junction box. Space is required for cable slack and operating clearance.
3. Leave cable slack for future operations.
4. Future conduits shall be plugged with
   S/N 2697- 2" plastic conduit plug, or
   S/N 2698- 4" plastic conduit plug.
5. Futures should be tagged with direction and length of conduit. See Std UID2.
6. Proof conduit and install sequentially numbered, 2500 lb mule tape in all futures.

Clark Public Utilities

CONSTRUCTION STANDARDS

3Ø JUNCTION BOX
5-WAY

REVISIONS			
R	DATE	ENGR	OPS

PAGE:		CAD FILE:	APP: CM/GM	SECTION
2 of 2	UJ4	UJ4	DATE: 3/12/20	1500

LEGEND:
- ○ Fault indicator
- Normally open (On standoff bracket)
- Source

The following are for Standards UJ1, UJ3, and UJ3F:

Rev. 4 - Removed LBC4 (installed at factory) from material issue, corrected material issue, and added LBC5 configurations.

ITEM NO.	DESCRIPTION	UJM4 QTY.	UJM4 S/N
8	Elbow, 200A, LB, 1/0, 175 & 220 mil, Test Point, 15kV, w/Jacket Seal	1	1312
10	Bushing, Standoff Insulated, 200A	1	252
11	Cap, Protective Insulated, 200A, 15kV UG	4	265
12	Connector, Crimpet, Cu, Run & Tap #2 Sol - #2 Str (2C2)	1	455

ITEM NO.	DESCRIPTION	UJM41 QTY.	UJM41 S/N
8	Elbow, 200A, LB, 1/0, 175 & 220 mil, Test Point, 15kV, w/Jacket Seal	2	1312
9	Indicator, Fault, UG, 400A, Test Point, Voltage Reset, 1Ø	1	2694
10	Bushing, Standoff Insulated, 200A	1	252
11	Cap, Protective Insulated, 200A, 15kV UG	3	265
12	Connector, Crimpet, Cu, Run & Tap #2 Sol - #2 Str (2C2)	2	455

ITEM NO.	DESCRIPTION	UJM42 QTY.	UJM42 S/N
8	Elbow, 200A, LB, 1/0, 175 & 220 mil, Test Point, 15kV, w/Jacket Seal	3	1312
9	Indicator, Fault, UG, 400A, Test Point, Voltage Reset, 1Ø	2	2694
10	Bushing, Standoff Insulated, 200A	2	252
11	Cap, Protective Insulated, 200A, 15kV UG	3	265
12	Connector, Crimpet, Cu, Run & Tap #2 Sol - #2 Str (2C2)	3	455

ITEM NO.	DESCRIPTION	UJM44 QTY.	UJM44 S/N
8	Elbow, 200A, LB, 1/0, 175 & 220 mil, Test Point, 15kV, w/Jacket Seal	2	1312
9	Indicator, Fault, UG, 400A, Test Point, Voltage Reset, 1Ø	1	2694
10	Bushing, Standoff Insulated, 200A	1	252
11	Cap, Protective Insulated, 200A, 15kV UG	3	265
12	Connector, Crimpet, Cu, Run & Tap #2 Sol - #2 Str (2C2)	2	455

ITEM NO.	DESCRIPTION	UJM45 QTY.	UJM45 S/N
8	Elbow, 200A, LB, 1/0, 175 & 220 mil, Test Point, 15kV, w/Jacket Seal	3	1312
9	Indicator, Fault, UG, 400A, Test Point, Voltage Reset, 1Ø	2	2694
10	Bushing, Standoff Insulated, 200A	1	252
11	Cap, Protective Insulated, 200A, 15kV UG	2	265
12	Connector, Crimpet, Cu, Run & Tap #2 Sol - #2 Str (2C2)	3	455

ITEM NO.	DESCRIPTION	UJM46 QTY.	UJM46 S/N
8	Elbow, 200A, LB, 1/0, 175 & 220 mil, Test Point, 15kV, w/Jacket Seal	4	1312
9	Indicator, Fault, UG, 400A, Test Point, Voltage Reset, 1Ø	3	2694
10	Bushing, Standoff Insulated, 200A	2	252
11	Cap, Protective Insulated, 200A, 15kV UG	2	265
12	Connector, Crimpet, Cu, Run & Tap #2 Sol - #2 Str (2C2)	4	455

Clark Public Utilities

CONSTRUCTION STANDARDS

PRIMARY JUNCTION BOX
SINGLE AND THREE PHASE
MATERIAL LIST

REVISIONS

R	DATE	ENGR	OPS
1	9/23/04	LB	AH
2	12/29/04	LB	AH
3	4/29/09	CM	AH
4	3/12/20	CM	GM

PAGE: 1 of 2

UJM

CAD FILE: UJM

APP: HWH/GGD
DATE: 1/22/80

SECTION 1500

The following are for Standards UJ1, UJ3, and UJ3F:

Rev. 4 - Removed LBC4 (installed at factory) from material issue, corrected material issue, and added LBC5 configurations.

ITEM NO.	DESCRIPTION 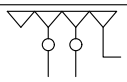	UJM47	
		QTY.	S/N
8	Elbow, 200A, LB, 1/0, 175 & 220 mil, Test Point, 15kV, w/Jacket Seal	3	1312
9	Indicator, Fault, UG, 400A, Test Point, Voltage Reset, 1Ø	2	2694
10	Bushing, Standoff Insulated, 200A	1	252
11	Cap, Protective Insulated, 200A, 15kV UG	2	265
12	Connector, Crimpet, Cu, Run & Tap #2 Sol - #2 Str (2C2)	3	455

ITEM NO.	DESCRIPTION 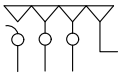	UJM48	
		QTY.	S/N
8	Elbow, 200A, LB, 1/0, 175 & 220 mil, Test Point, 15kV, w/Jacket Seal	4	1312
9	Indicator, Fault, UG, 400A, Test Point, Voltage Reset, 1Ø	3	2694
10	Bushing, Standoff Insulated, 200A	1	252
11	Cap, Protective Insulated, 200A, 15kV UG	1	265
12	Connector, Crimpet, Cu, Run & Tap #2 Sol - #2 Str (2C2)	4	455

ITEM NO.	DESCRIPTION 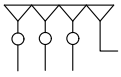	UJM49	
		QTY.	S/N
8	Elbow, 200A, LB, 1/0, 175 & 220 mil, Test Point, 15kV, w/Jacket Seal	4	1312
9	Indicator, Fault, UG, 400A, Test Point, Voltage Reset, 1Ø	3	2694
10	Bushing, Standoff Insulated, 200A	1	252
11	Cap, Protective Insulated, 200A, 15kV UG	1	265
12	Connector, Crimpet, Cu, Run & Tap #2 Sol - #2 Str (2C2)	4	455

The following are for Standards UJ2 and UJ4:

ITEM NO.	DESCRIPTION 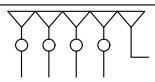	UJM5	
		QTY.	S/N
8	Elbow, 200A, LB, 1/0, 175 & 220 mil, Test Point, 15kV, w/Jacket Seal	5	1312
9	Indicator, Fault, UG, 400A, Test Point, Voltage Reset, 1Ø	4	2694
10	Bushing, Standoff Insulated, 200A	1	252
11	Cap, Protective Insulated, 200A, 15kV UG	1	265
12	Connector, Crimpet, Cu, Run & Tap #2 Sol - #2 Str (2C2)	5	455

ITEM NO.	DESCRIPTION 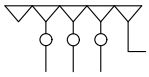	UJM51	
		QTY.	S/N
8	Elbow, 200A, LB, 1/0, 175 & 220 mil, Test Point, 15kV, w/Jacket Seal	4	1312
9	Indicator, Fault, UG, 400A, Test Point, Voltage Reset, 1Ø	3	2694
10	Bushing, Standoff Insulated, 200A	1	252
11	Cap, Protective Insulated, 200A, 15kV UG	2	265
12	Connector, Crimpet, Cu, Run & Tap #2 Sol - #2 Str (2C2)	4	455

Clark Public Utilities

CONSTRUCTION STANDARDS

PRIMARY JUNCTION BOX
SINGLE AND THREE PHASE
MATERIAL LIST

REVISIONS

R	DATE	ENGR	OPS
1	9/23/04	LB	AH
2	12/29/04	LB	AH
3	4/29/09	CM	AH
4	3/12/20	CM	GM

UJM

CAD FILE: UJM

APP: HWH/GGD
DATE: 1/22/80

SECTION 1500

TOP VIEW

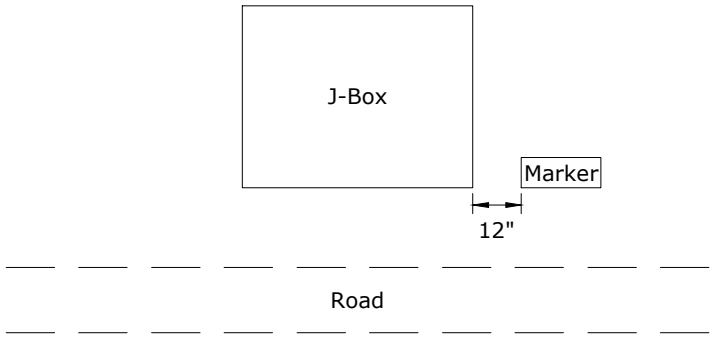

SIDE VIEW

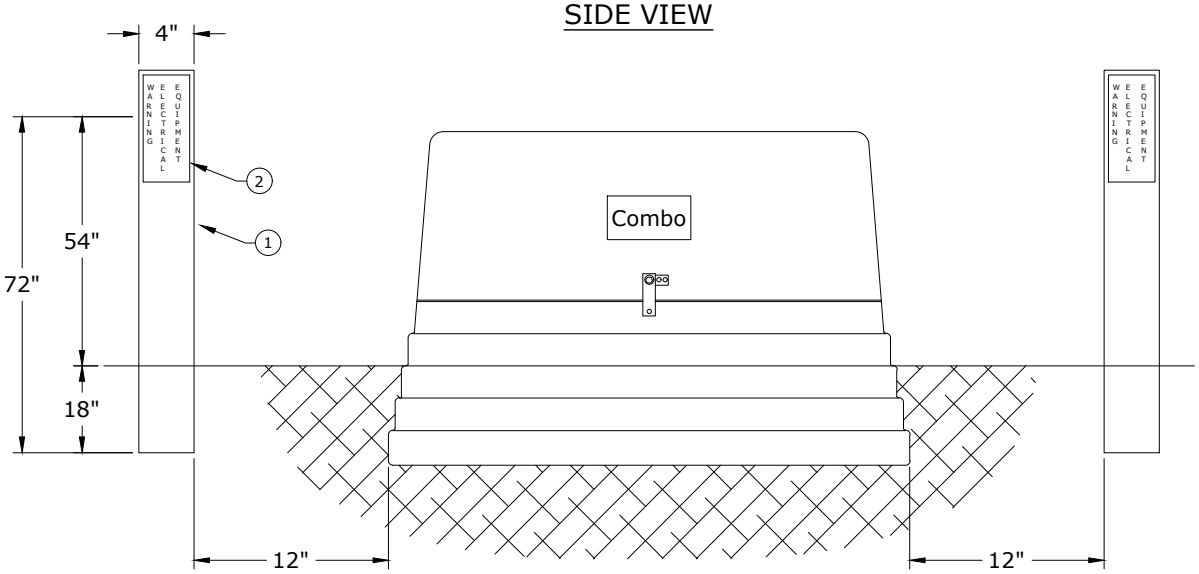

Notes:

1. Use marker when view of J-box may be obscured by terrain or foliage.
2. Call for locates before installing.

ITEM NO.	DESCRIPTION	UJMP QTY.	UJMP S/N
1	Marker, Post, Red, 6', Electrical Equipment	2	2896
2	Marker, Post, Marker, Electrical Equipment	2	2893

Clark Public Utilities

CONSTRUCTION STANDARDS

JUNCTION BOX MARKER

REVISIONS

R	DATE	ENGR	OPS

PAGE: 1 of 1

UJMP

CAD FILE: UJMP

APP: CM/GM

DATE: 3/12/20

SECTION 1500

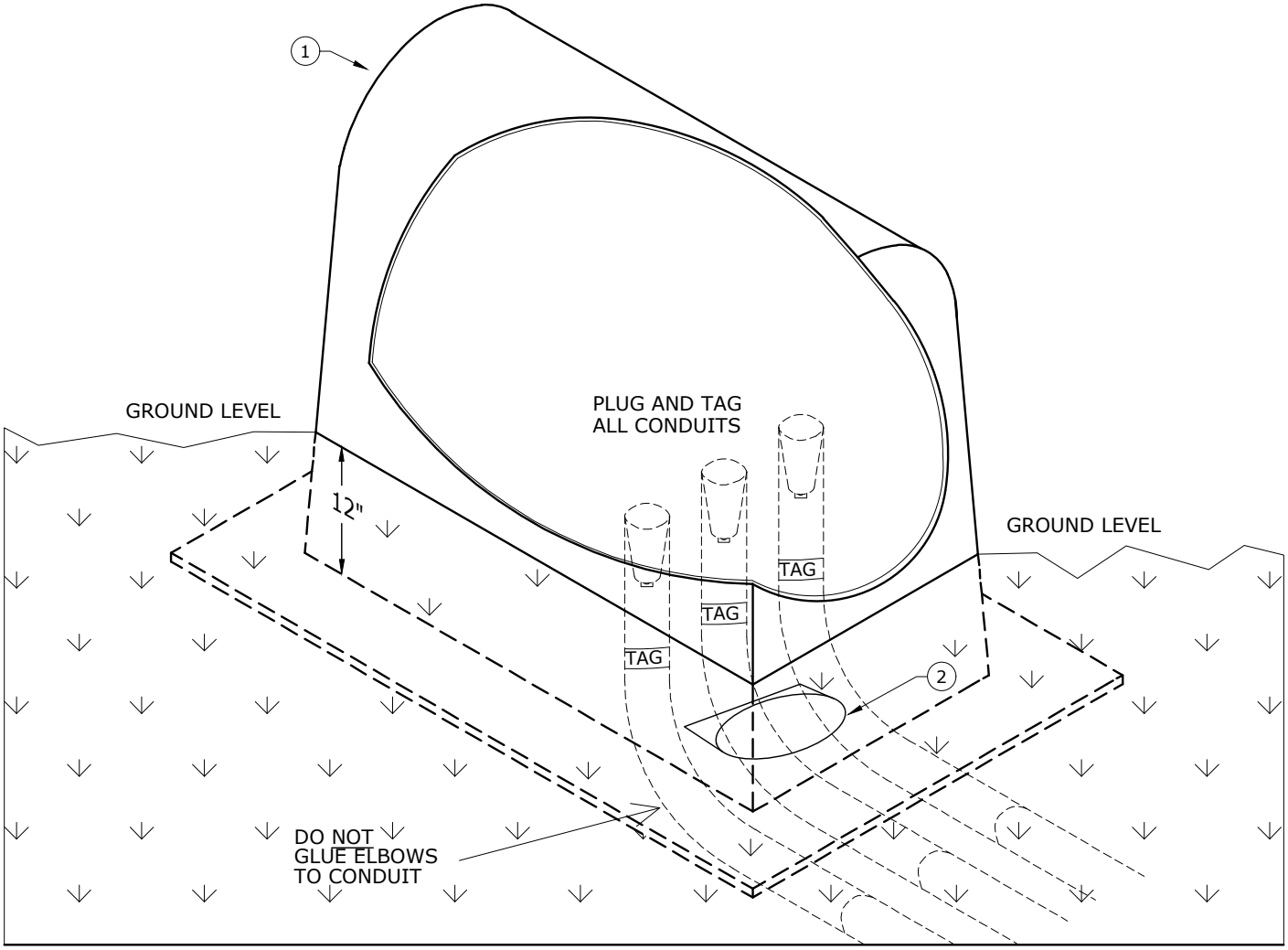

Notes:

1. Bury approximately one foot of the enclosure.
2. Conduits shall be buried 42" to 48" deep unless otherwise approved by CPU.
3. The disc marker is to be installed flat with the instructions facing up.
4. The disc should be placed in radius of elbow.
5. CPU has the locator for finding these markers.
6. The markers are reusable.
7. Loop enclosures and marker discs provided by CPU.
8. All conduits shall be plugged w/
   S/N 2697- 2" plastic conduit plug or
   S/N 2698- 4" plastic conduit plug.
9. All conduits should be tagged with direction and length of conduit. See Std. UID2.
10. Proof conduit and install sequentially-numbered, 2500 lb, mule tape in all futures.

Rev. 2 - Added Notes #8, #9, & #10 and added plugs and tags to drawings.

ITEM	DESCRIPTION	QTY	S/N
1	Enclosure, Cable Loop, Fiberglass, 30" x 30" x 8" w/ 5" Flange	1	1821
2	Marker, UG, Disc, Full Range	1	2210

Clark Public Utilities

CONSTRUCTION STANDARDS

LOOP ENCLOSURE

REVISIONS

R	DATE	ENGR	OPS
0	9/23/04	LB	AH
1	12/29/04	LB	AH
2	3/12/20	CM	GM

PAGE: 1 of 1

ULE

CAD FILE: ULE

APP: HWH/GGW

DATE: 9/94

SECTION 1500

1600
1000 MCM CABLE

12/23/2022

~	UEE1	Elbow Enclosure - Deadend
~	UEE2	Elbow Enclosure - Feed-Through
C	UPR1	1000 MCM Cable Riser
C	UPR2	1000 MCM Power Cable Riser Grounding Detail
C	UPR4	1000 MCM Cable Riser with 3Ø Switch
C	UPR5	1000 MCM Cable Riser with 600 Amp Disconnects
C	UPR6	Parallel 1000 MCM Cable Riser with 3Ø Switch
~	USG1	Padmount Switchgear - 600A Elbow - 1000MCM Cable
~	USG2	Padmount Switchgear Chart
~	USG3	Deadfront Switchgear – 612 Vault Detail
~	USG5	Deadfront Switchgear on 774 Vault For Maintenance Only or When Std USG3 Vault Will Not Fit
~	USG8	Below Grade Switchgear – Use w/ Std USG9
~	USG9	Below Grade Switchgear – Vault Detail – Use w/ Std USG8
~	USP	1000MCM Splice Pit Flush-Mount

N New Standard
R Redrawn Standard
C Changed Standard
~ No Change

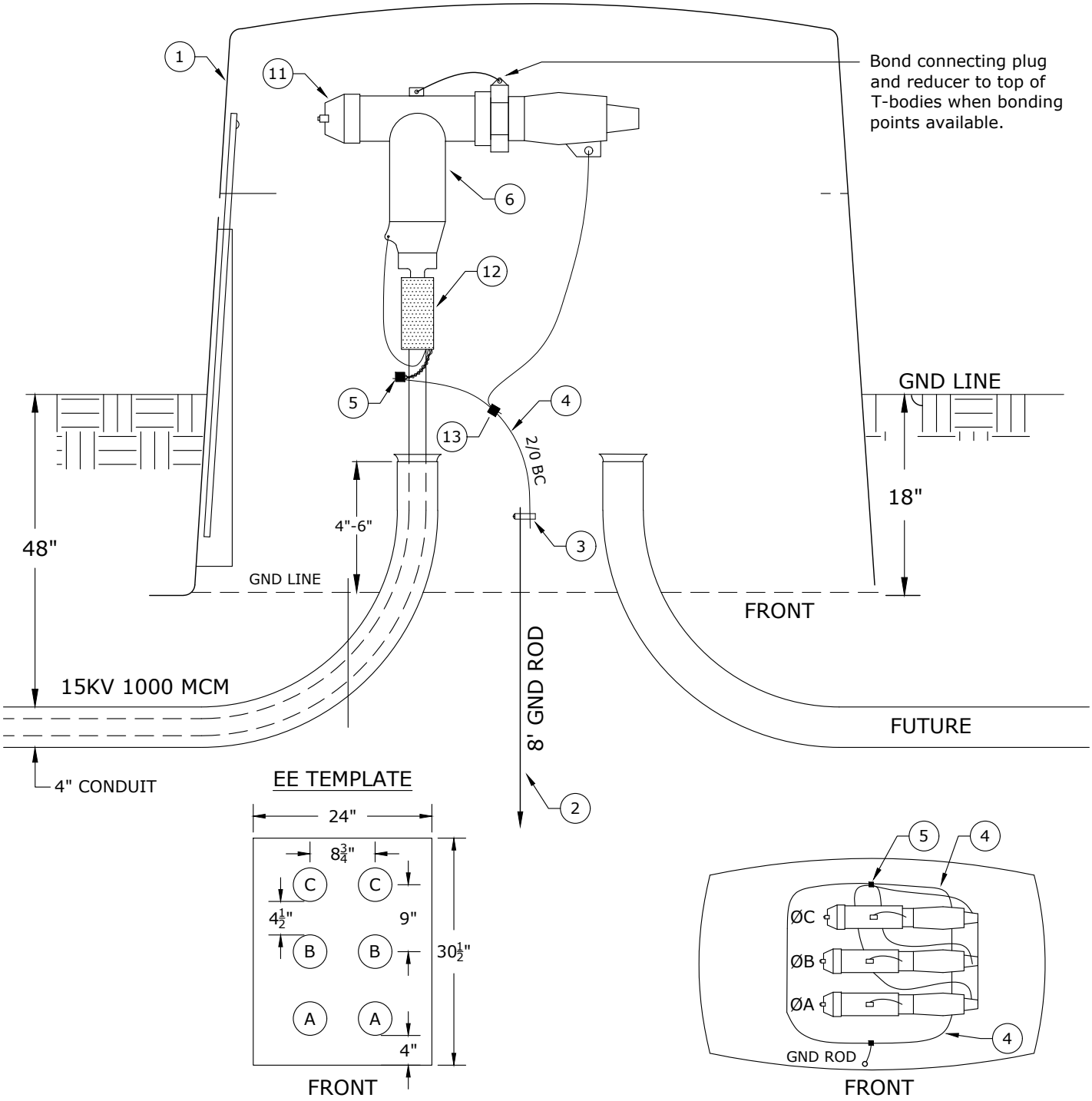

Notes:

1. Use EE template when framing conduits and backfilling.
2. Leave enough cable slack to position the elbow near the top of the enclosure lid. This provides room for future operations.
3. Elbows assemble 8-3/4" apart (center to center). Align conduits to avoid cable bending.

Rev. 4 - Corrected material list, torque requirements, and template dimensions.

Clark Public Utilities

CONSTRUCTION STANDARDS

ELBOW ENCLOSURE
DEADEND

REVISIONS

R	DATE	ENGR	OPS
1	9/23/04	LB	AH
2	10/7/05	LB	AH
3	12/14/09	KJP	
4	8/8/22	CRM	GM

PAGE: 1 of 2

UEE1

CAD FILE: UEE1

APP:

DATE: 6/90

SECTION 1600

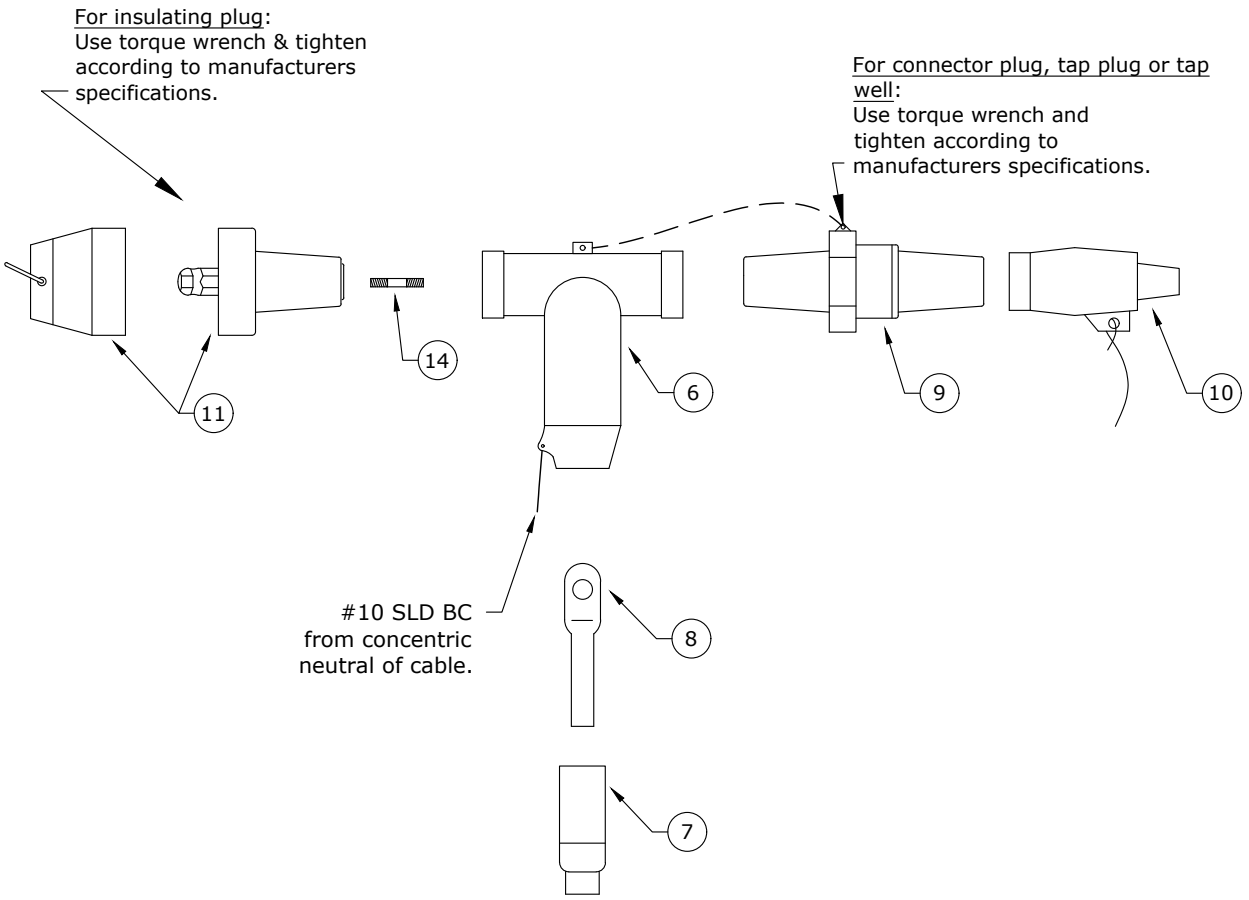

DEADEND

Rev. 4 - Corrected material list, torque requirements, and template dimensions.

ITEM NO.	DESCRIPTION	UEE1☼	
		QTY.	S/N
1	Enclosure, Elbow (EE), Fiberglass, 72"w x 49"h x 44"d	1	2213
2	Rod, Ground, 5/8" x 8'	1	1124
3	Clamp, Ground Rod, 5/8" Bronze, Large	1	282
4	Conductor, OH, Cu, 2/0, 7-Str, Bare, Soft-Drawn, 1C	30 Ft.	379 ☼
5	Connector, Crimpet, Cu, Run & Tap 3/0 to 4/0 Str	3	460
6	Elbow, 600 Amp, T-body	3	1825
7	Adapter, Cable, 1000 MCM	3	1
8	Contact, Compression, Al, 1000 MCM, Non-Threaded Hole	3	941
9	Plug, Loadbreak, Reducing Tap, 600A-200A	3	1769
10	Cap, Protective Insulated, 200A	3	265
11	Plug, Basic Insulating	3	1824
12	Elbow, Sealing Kit, 1000MCM, 175 & 220 mil	3	2376
13	Connector, Crimpet, Cu, Run & Tap 1/0 to 2/0 Str	1	457
14	Stud, Al, 600A T-body To Reducer Plug	3	2704 ☼

Clark Public Utilities

CONSTRUCTION STANDARDS

ELBOW ENCLOSURE
DEADEND

REVISIONS

R	DATE	ENGR	OPS
1	9/23/04	LB	AH
2	10/7/05	LB	AH
3	12/14/09	KJP	
4	8/8/22	CRM	GM

PAGE: 2 of 2

UEE1

CAD FILE: UEE1

APP:

DATE: 6/90

SECTION 1600

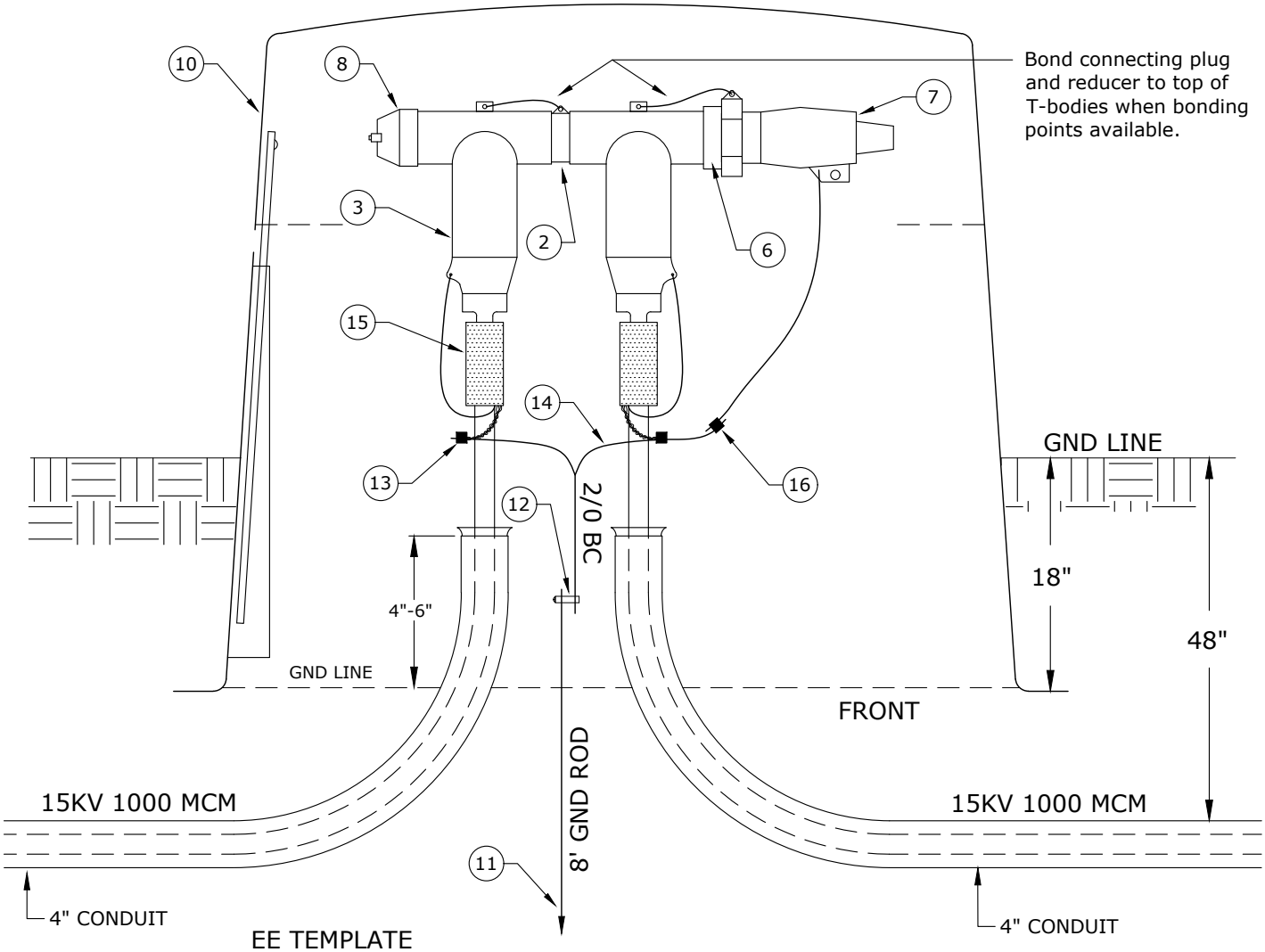

EE TEMPLATE

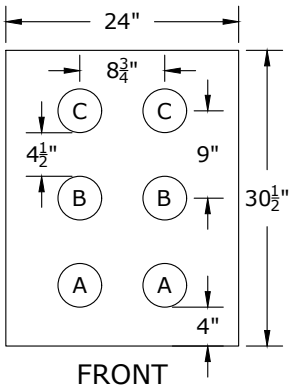

TOP VIEW

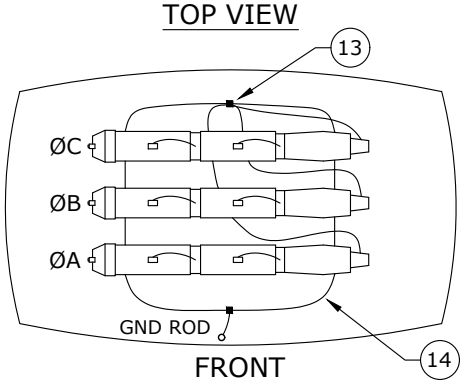

Notes:

1. Use EE template when framing conduits and backfilling.
2. Leave enough cable slack to position the elbow near the top of the enclosure lid. This provides room for future operations.
3. Elbows assemble 8-3/4" apart (center to center). Align conduits to avoid cable bending.

Rev. 3 - Corrected material list, torque requirements, and template dimensions.

Clark Public Utilities

CONSTRUCTION STANDARDS

ELBOW ENCLOSURE
FEED-THROUGH

REVISIONS

R	DATE	ENGR	OPS
1	10/7/05	LB	AH
2	8/25/09	CM	AH
3	8/8/22	CRM	GM

PAGE: 1 of 2

UEE2

CAD FILE: UEE2

APP: LB/AH
DATE: 9/23/04

SECTION 1600

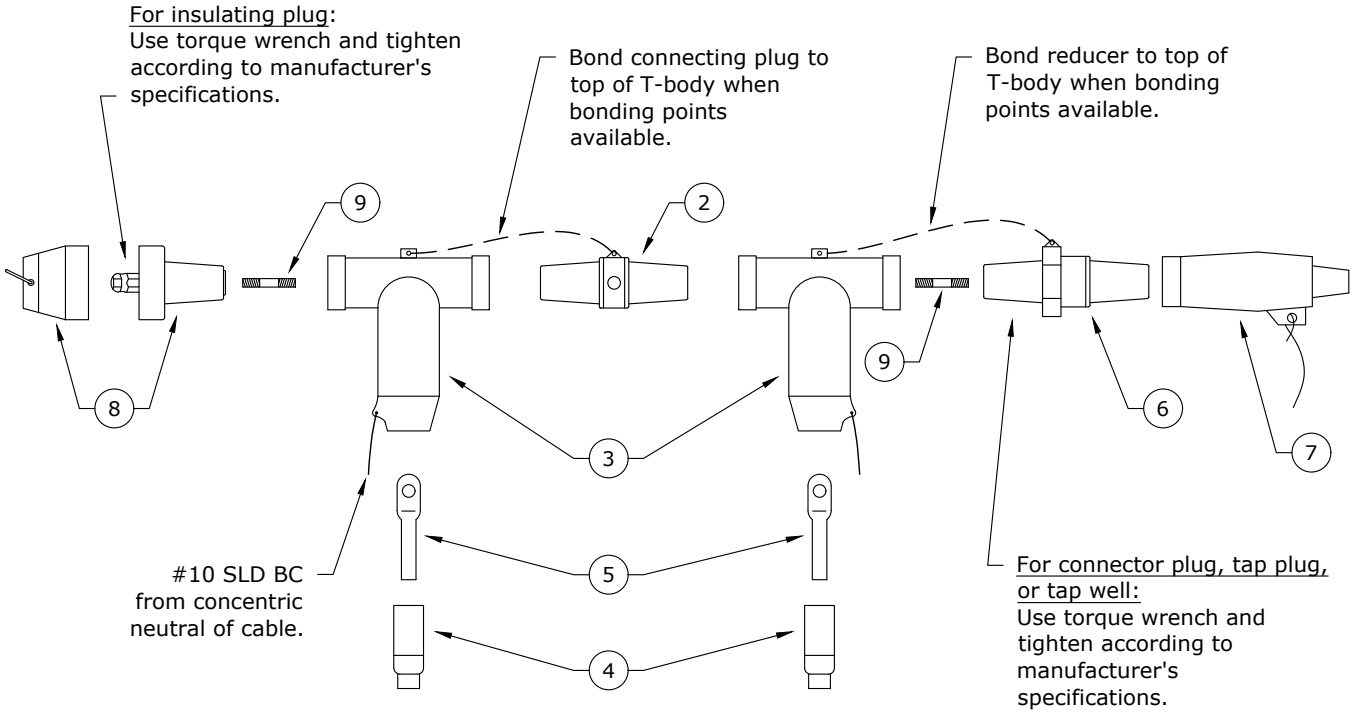

Rev. 3 - Corrected material list, torque requirements, and template dimensions.

ITEM NO.	DESCRIPTION	UEE2	
		QTY.	S/N
1	Elbow, 600A, NLB, Test Point, Kit for UEE2	3	2693
	Each Kit Consists Of: (Items #2 Thru #9)		
2	*Plug, Connecting, 600A*	1	1723
3	*Elbow, 600A, T-body*	2	1825
4	*Adapter, Cable, 1000MCM*	2	1
5	*Contact, Compression, Al, 1000 MCM, Non-threaded Hole*	2	941
6	*Plug, Loadbreak, Reducing Tap, 600A-200A*	1	1769
7	*Cap, Protective Insulated, 200A*	1	265
8	*Plug, Basic Insulating*	1	1824
9	*Stud, Al, 600A T-body To Reducer Plug*	2	2704 ✲
10	Enclosure, Elbow (EE), Fiberglass, 72"w x 49"h x 44"d	1	2213
11	Rod, Ground, 5/8" x 8'	1	1124
12	Clamp, Ground Rod, 5/8" Bronze, Large	1	282
13	Connector, Crimpet, Cu, Run & Tap 3/0 to 4/0	6	460
14	Conductor, OH, Cu, 2/0, 7-Str, Bare, Soft-Drawn, 1C	30 ft	379
15	Elbow, Sealing Kit, 1000MCM, 175 & 220 mil	6	2376
16	Connector, Crimpet, Cu, Run & Tap 1/0 to 2/0 Str	1	457

Clark Public Utilities

CONSTRUCTION STANDARDS

ELBOW ENCLOSURE
FEED-THROUGH

REVISIONS

R	DATE	ENGR	OPS
1	10/7/05	LB	AH
2	8/25/09	CM	AH
3	8/8/22	CRM	GM

PAGE: 2 of 2

UEE2

CAD FILE: UEE2

APP: LB/AH
DATE: 9/23/04

SECTION 1600

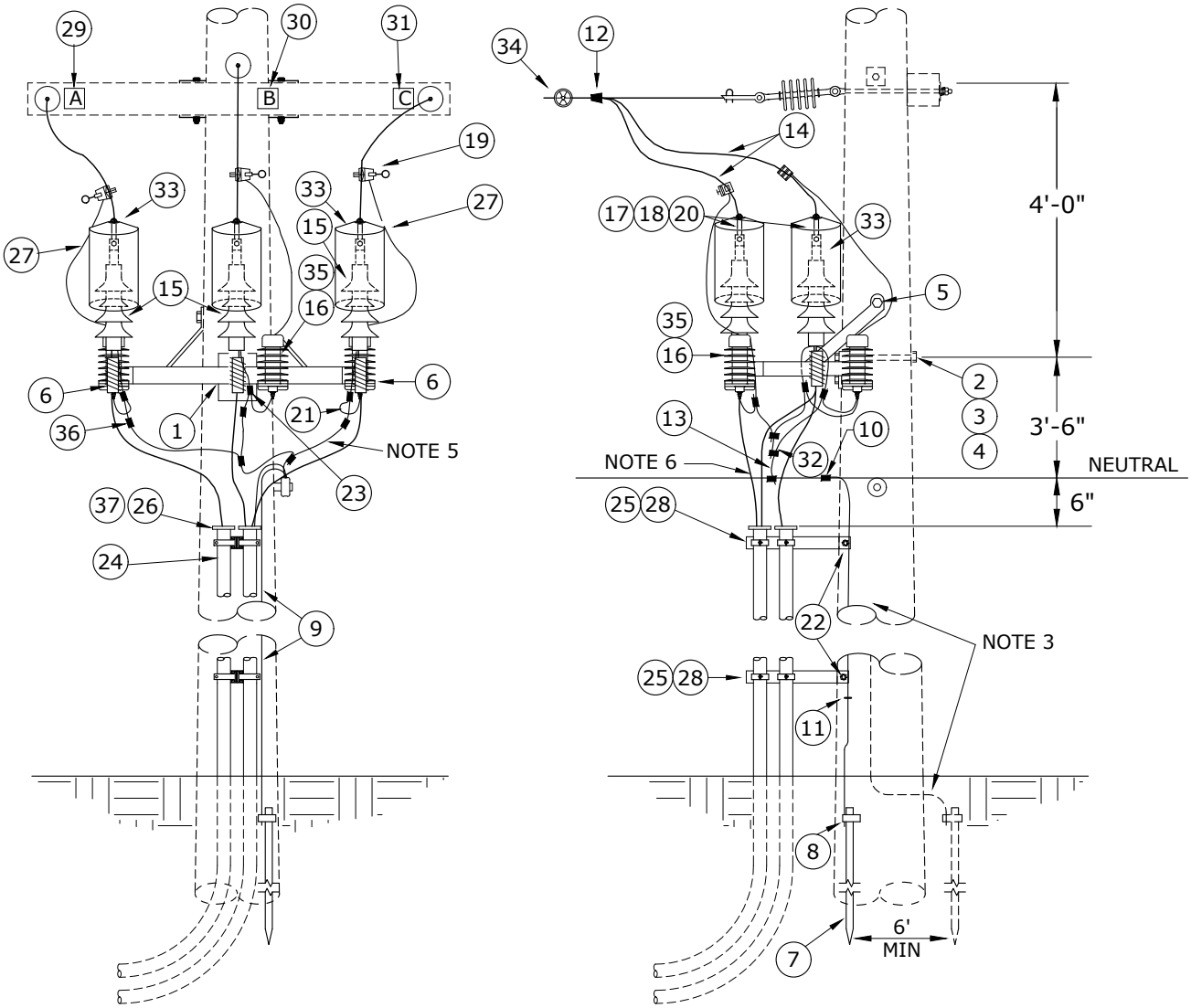

Notes:

1. UPR4 is the preferred standard. This standard is to be used for short dips such as airport dips or if other switches are nearby for isolation. See UPR4 for the recommended construction.
2. See UPR2 for grounding details.
3. All ground wire is #4 Cu equivalent covered copper-clad steel.
4. Static wire ground when required. DO NOT connect to neutral. See N2 for details. Engineer must call for static wire ground separately.
5. Avoid sharp turns in the arrester grounds and primary leads.
6. 2/0 CU from terminators to overhead neutral for all 1000MCM construction.

Rev 3 - Removed extra 2/0 Cu neutral for substation get-a-aways, changed to copper-clad steel grounds & added support grips and 4/0-2/0 crimpets.

Clark Public Utilities

CONSTRUCTION STANDARDS

1000 MCM CABLE RISER

REVISIONS

R	DATE	ENGR	OPS
0	2/23/00	HWH	MA
1	12/29/04	LB	AH
2	1/13/10	CM	AH
3	12/9/22	CRM	GM

PAGE: 1 of 2

UPR1

CAD FILE: UPR1

APP:

DATE: 6/90

SECTION 1600

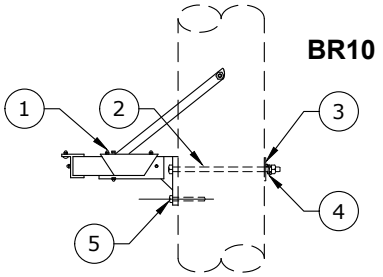

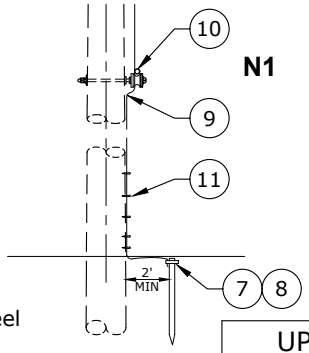

Rev 3 - Removed extra 2/0 Cu neutral for substation get-a-aways, changed to copper-clad steel grounds & added support grips and 4/0-2/0 crimpets.

ITEM NO.	DESCRIPTION	UPR1 BR10 QTY.	S/N
1	Bracket, Terminator, Mount, 48", 1000MCM	1	2842 ✲
2	Bolt, Machine, 5/8" x 14", Galv, 12,400 lb Ultimate Tensile	1	156
3	Washer, Curved, Square, Cast, 3" x 3" x 3/8" Thick x 13/16" Hole, Galv	1	1392
4	Washer, Lock, Spring, Double Coil, Galv, 5/8"	1	2217
5	Screw, Lag, 1/2" x 4 1/2", Twist Drive, Drive Point	3	1132
6	Support, Cable, 1000MCM	3	2229

ITEM NO.	DESCRIPTION	N1 QTY.	S/N
7	Rod, Ground, 5/8" x 8'	1	1124
8	Clamp, Ground Rod, 5/8", Small, Bronze	1	281
9	Conductor, Copper-Clad Steel, #4 Cu Equivalent, 40% Annealed, Black Jacket with Green Stripe	40✲	1512 ✲
10	Connector, H-Tap, Al/Cu, Run #2-2/0 Str - Tap #6-#1 Str	1	413
11	Staple, Ground Wire, Barbed, Galvanized, 1 1/2"	24	2707

ITEM NO.	DESCRIPTION	ADDITIONAL MATERIAL QTY.	S/N
12	Connector, Tap, Wedge, Run and Tap 336 ACSR to 397 AAC	3	2501
13	Conductor, OH, 600v, Cu, 2/0, 19-Str, XLPE, 80 mil, Soft-Drawn, 1C, RHW-2	30	381
14	Conductor, OH, AAC, 397.5, 19-Str, Bare, 1C, Canna	30	367
15	Terminator, 15kV, Cold-Shrink JCN, 1000MCM	3	2225
16	Arrester, Surge, 9 kV, MOV, Riser Pole	3	58
17	Connector, Compression, Lug, 2-hole, 336 ACSR & 397 AAC	3	438
18	Connector, Compression, Lug, Al/Cu, Tin-Plated, 1000MCM to NEMA 2-Hole	3	1501
19	Clamp, Hot Line, GP1530, Line #6 Sol - 400MCM, Tap #6 Sol - 4/0 Str Cu Only	3	284
20	Bolt, 1/2" x 2", w/ Flat and Belleville Washers, Assembly	6	1389
21	Conductor, OH, Cu, #4 Solid, Bare, Soft-Drawn, 1C	10	376
22	Screw, Lag, 1/2" x 4 1/2", Twist Drive, Drive Point	6	1132
23	Connector, Crimpet, Cu, Run 3/0 - 4/0 Str, Tap #6 Sol - #2 Str	3	458 ✲
24	Conduit, 4" x 10', Sch 80	90	2203
25	Clamp, Standoff Bracket, 4"	9	297
26	End Bell, 4", Sch 40, Long	3	2204
27	Conductor, OH, 600v, Cu, #2, 7-Str, XLPE, 60 mil, Soft-Drawn, 1C, RHW-2	15	393
28	Bracket, Standoff, 15" w/ Stop and Brace	3	227
29	Tag, Phase A	1	1280
30	Tag, Phase B	1	1281
31	Tag, Phase C	1	1282
32	Connector, Crimpet, Cu, Run and Tap 1/0 - 2/0 Str	2 ✲	457
33	Guard, Wildlife, Large, OH/UG Terminators	3	1676
34	Indicator, Fault, 400A, OH, Beacon w/ Signal Flag, Electric Field Reset	3	2558
35	Guard, Wildlife, Polymer Arrester	3	2583
36	Connector, Crimpet, Cu, Run 3/0 Str - 250 Str, Tap #6 Sol - 2/0 Str	3	459 ✲
37	Grip, Support, 4" Conduit, 1000MCM (1.625" to 2.5")	3	2521 ✲

Clark Public Utilities

CONSTRUCTION STANDARDS

1000 MCM CABLE RISER

REVISIONS

R	DATE	ENGR	OPS
0	2/23/00	HWH	MA
1	12/29/04	LB	AH
2	1/13/10	CM	AH
3	12/9/22	CRM	GM

PAGE: 2 of 2

UPR1

CAD FILE: UPR1

APP:

DATE: 6/90

SECTION 1600

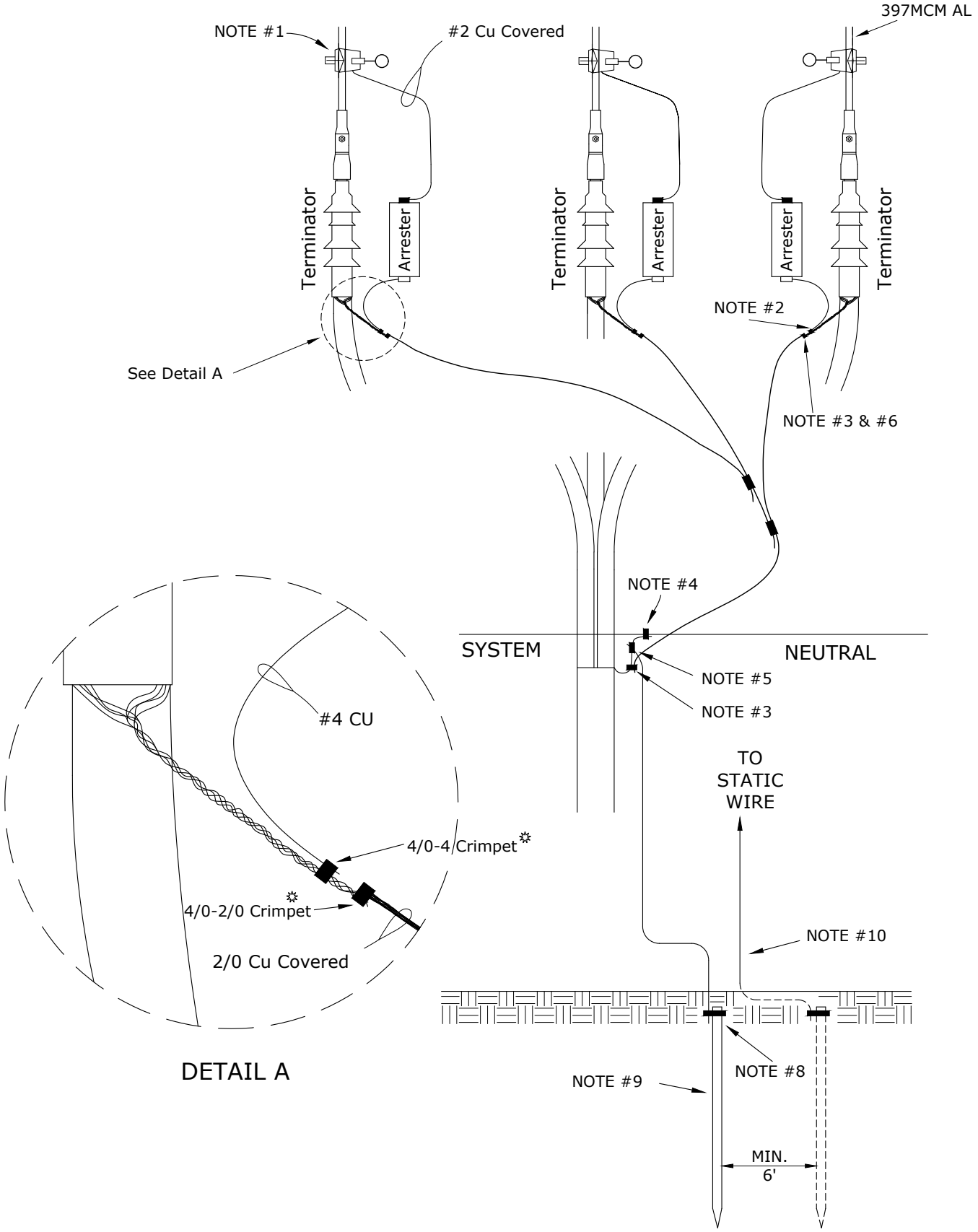

Rev 2 - Updated notes for 2023 NESC and changed to 4/0-2/0 crimpet.

Clark Public Utilities

CONSTRUCTION STANDARDS

1000 MCM CABLE RISER
GROUNDING DETAIL

REVISIONS

R	DATE	ENGR	OPS
0	2/23/00	HWH	MA
1	12/29/04	LB	AH
2	12/9/22	CRM	GM

PAGE:		CAD FILE:	APP:	SECTION
1 of 2	UPR2	UPR2	DATE: 6/90	1600

NOTES:

1. Make connections as close to terminator as possible but DO NOT make a sharp bend. Use hot line clamp for easy removal.

2. Connect surge arrester lead to concentric neutral.

3. Connect concentric neutral wires (twist together) to 2/0 stranded copper with 4/0-2/0✲ crimpet. Connect separate 2/0 runs, as per drawing, from each concentric neutral to the system neutral. Use 2/0 covered conductor and train this conductor back down along the 1000MCM cable for appearance.

4. Connect 2/0 copper riser neutral to system neutral only. This riser neutral is only used for substation get-a-ways. The 2/0 Cu riser neutral is only needed on old installations where the 1000MCM had less than 1/3 neutral per phase. Any get-a-way with a full neutral does not need the additional 2/0 Cu.✲

5. Use separate ground lead for system neutral grounding connection. Any other equipment grounds may be connected to this ground lead also per NESC 092B3.

6. Do not connect arrester grounds separately to system neutral. Connect to concentric neutral as near to the terminator as possible per NESC 097B.

7. Do not ground equipment mounting bracket per NESC 123A.

8. Top of ground rod must be buried per NESC 094C2a3. ✲

9. If more than one ground rod is required they must be separated by at least 6 feet per NESC 094C2a2.✲

10. Static wire ground when required. DO NOT connect to neutral. See TN1 to TN4 for static wire details.

Rev 2 - Updated notes for 2023 NESC and changed to 4/0-2/0 crimpet.

Clark Public Utilities

CONSTRUCTION STANDARDS

1000 MCM CABLE RISER GROUNDING DETAIL

REVISIONS

R	DATE	ENGR	OPS
0	2/23/00	HWH	MA
1	12/29/04	LB	AH
2	12/9/22	CRM	GM

PAGE: 2 of 2

UPR2

CAD FILE: UPR2

APP:

DATE: 6/90

SECTION 1600

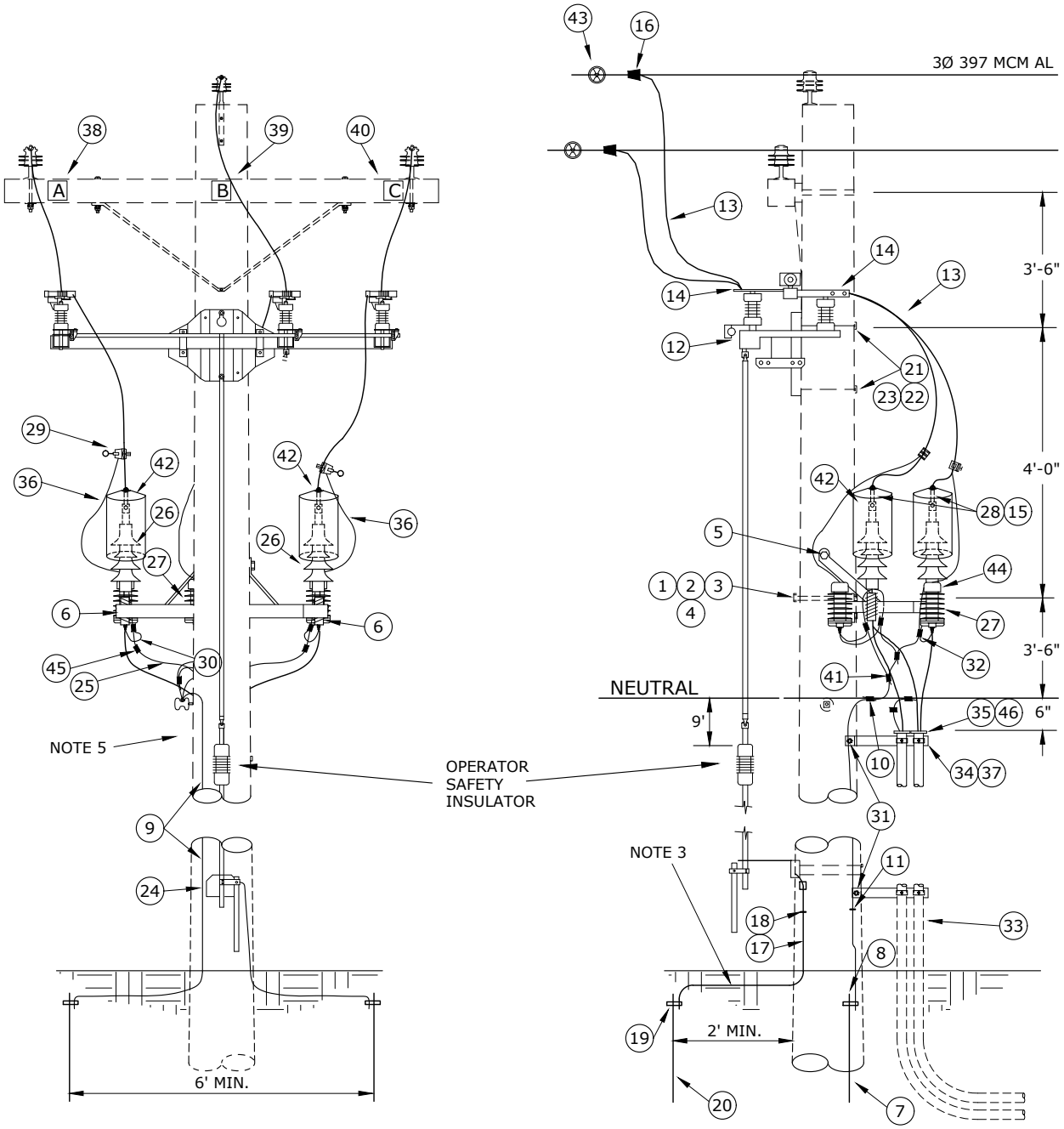

Notes:

1. This is the recommended 1000 MCM riser standard. See UPR1 or UPR5 when it is not possible to install a switch.
2. See UPR2 for grounding details.
3. All ground wire is #4 Cu equivalent covered copper-clad steel.
4. Avoid sharp turns in lightning arrester grounds and primary leads.
5. The pole must be 45' Class 2 or taller.
6. Static wire ground when required. DO NOT connect to neutral. See N2 for details. Engineer must call for static wire ground separately.

Rev 1 - Corrected material issue, changed to copper-clad steel, and added support grips and Note #6.

Clark Public Utilities

CONSTRUCTION STANDARDS

1000MCM CABLE RISER
WITH 3Ø SWITCH

REVISIONS			
R	DATE	ENGR	OPS
1	12/9/22	CRM	GM

PAGE: 1 of 3

UPR4

CAD FILE: UPR4

APP: CM/AH
DATE: 1/13/10

SECTION 1600

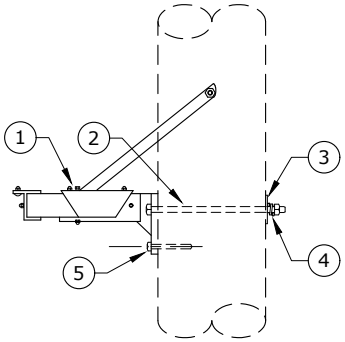

BR10

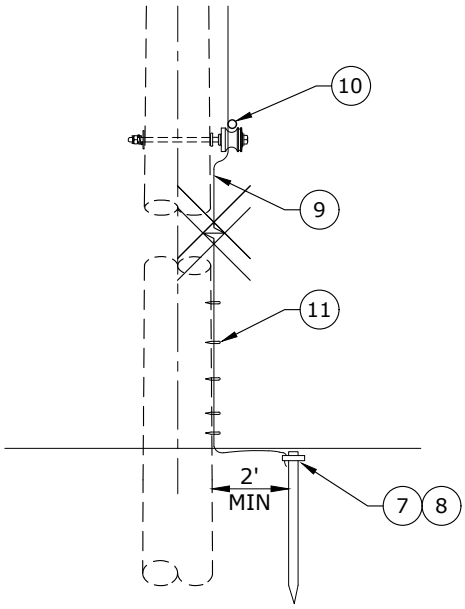

N1

Clark Public Utilities

CONSTRUCTION STANDARDS

1000MCM CABLE RISER
WITH 3Ø SWITCH

REVISIONS			
R	DATE	ENGR	OPS
1	12/9/22	CRM	GM

PAGE: 2 of 3

UPR4

CAD FILE: UPR4

APP: CM/AH

DATE: 1/13/10

SECTION 1600

Rev 1 - Corrected material issue, changed to copper-clad steel, and added support grips and Note #6.

UPR4

ITEM NO.	DESCRIPTION	BR10 QTY.	BR10 S/N
1	Bracket, Terminator, Mount, 48", 1000MCM	1	2842 ✲
2	Bolt, Machine, 5/8" x 14", Galv, 12,400 lb Ultimate Tensile	1	156
3	Washer, Curved, Square, Cast, 3" x 3" x 3/8" Thick x 13/16" Hole, Galv	1	1392
4	Washer, Lock, Spring, Double Coil, Galv 5/8"	1	2217
5	Screw, Lag, 1/2" x 4 1/2", Twist Drive, Drive Point	3	1132
6	Support, Cable, 1000MCM	3	2229

ITEM NO.	DESCRIPTION	N1 QTY.	N1 S/N
7	Rod, Ground, 5/8" x 8'	1	1124
8	Clamp, Ground Rod, 5/8", Small, Bronze	1	281
9	Conductor, Copper-Clad Steel, #4 Cu Equivalent, 40% Annealed, Black Jacket with Green Stripe	40✲	1512 ✲
10	Connector, H-Tap, Al/Cu, Run #2 - 2/0 Str, Tap #6 - #1 Str	1	413
11	Staple, Ground Wire, Barbed, Galvanized, 1 1/2"	24	2707 ✲

ITEM NO.	DESCRIPTION	ADDITIONAL MATERIAL QTY.	ADDITIONAL MATERIAL S/N
12	Switch, Loadbreak, Horizontal, 900A, 15kV	1	2432
13	Conductor, OH, AAC, 397.5, 19-Str, Bare, 1C, Canna	60	367
14	Connector, Compression, Lug, 2-Hole, 336 ACSR and 397 AAC	6	438
15	Bolt, 1/2" x 2", w/ Flat and Belleville Washers, Assembly	6 ✲	1389
16	Connector, Tap, Wedge, Run and Tap 336 ACSR - 397 AAC	3	2501
17	Conductor, Copper-Clad Steel, #4 Cu Equivalent, 40% Annealed, Black Jacket with Green Stripe	20	1512 ✲
18	Staple, Ground Wire, Barbed, Galvanized, 1 1/2"	5	2707 ✲
19	Clamp, Ground Rod, 5/8", Small, Bronze	1	281
20	Rod, Ground, 5/8" x 8'	1	1124
21	Machine Bolt, 3/4" x 16" Galv., 18,350 lbs. Ultimate Tensile	2	175
22	Washer, Curved, Cast, 4" x 4" with 13/16" Hole	2	1910
23	Washer, Lock Spring, Double Coil, Galv. 3/4"	2	2218
24	Lock, Padlock, 2" Hardened Stainless Steel Shackle	1	2564
25	Conductor, OH, 600v, Cu, 2/0, 19-Str, XLPE, 80 mil, Soft-Drawn, 1C, RHW-2	60	381
26	Terminator, 15kV, Cold-Shrink JCN, 1000 MCM	3	2225
27	Arrester, Surge, 9kV, MOV, Riser Pole	3	58
28	Connector, Compression, Lug, Al/Cu, Tin-Plated, 1000MCM to NEMA 2-Hole	3	1501
29	Clamp, Hot Line, GP 1530, Line #6 Sol - 400MCM, Tap #6 Sol - 4/0 Str Cu Only	3	284
30	Conductor, OH, Cu, #4 Solid, Bare, Soft-Drawn, 1C	10	376
31	Screw, Lag, 1/2" x 4 1/2", Twist Drive, Drive Point	9	1132
32	Connector, Crimpet, Cu, Run 3/0 - 4/0 Str, Tap #6 Sol - #2 Str	3 ✲	458 ✲
33	Conduit, 4" x 10', Sch 80	90✲	2203
34	Clamp, Standoff Bracket, 4"	9	297
35	End Bell, 4" Sch 40, Long	3	2204
36	Conductor, OH, 600v, Cu, #2, 7-Str, XLPE, 60 mil, Soft-Drawn, 1C, RHW-2	15	393
37	Bracket, Standoff, 15" with Stop and Brace	3	227
38	Tag, Phase A	1	1280
39	Tag, Phase B	1	1281
40	Tag, Phase C	1	1282
41	Connector, Crimpet, Cu, Run and Tap 1/0 - 2/0 Str	2 ✲	457
42	Guard, Wildlife, Large, OH/UG Terminators	3	1676 ✲
43	Indicator, Fault, 400A, OH, Beacon with Signal Flag, Electric Field Reset	3	2558
44	Guard, Wildlife, Polymer Arrester	3	2583✲
45	Connector, Crimpet, Cu, Run 3/0 Str - 250 Str, Tap #6 Sol - 2/0 Str	3	459 ✲
46	Grip, Support, 4" Conduit, 1000MCM (1.625" to 2.5")	3	2521✲

Clark Public Utilities

CONSTRUCTION STANDARDS

1000MCM CABLE RISER
WITH 3Ø SWITCH

REVISIONS

R	DATE	ENGR	OPS
1	12/9/22	CRM	GM

PAGE: 3 of 3

UPR4

CAD FILE: UPR4

APP: CM/AH

DATE: 1/13/10

SECTION 1600

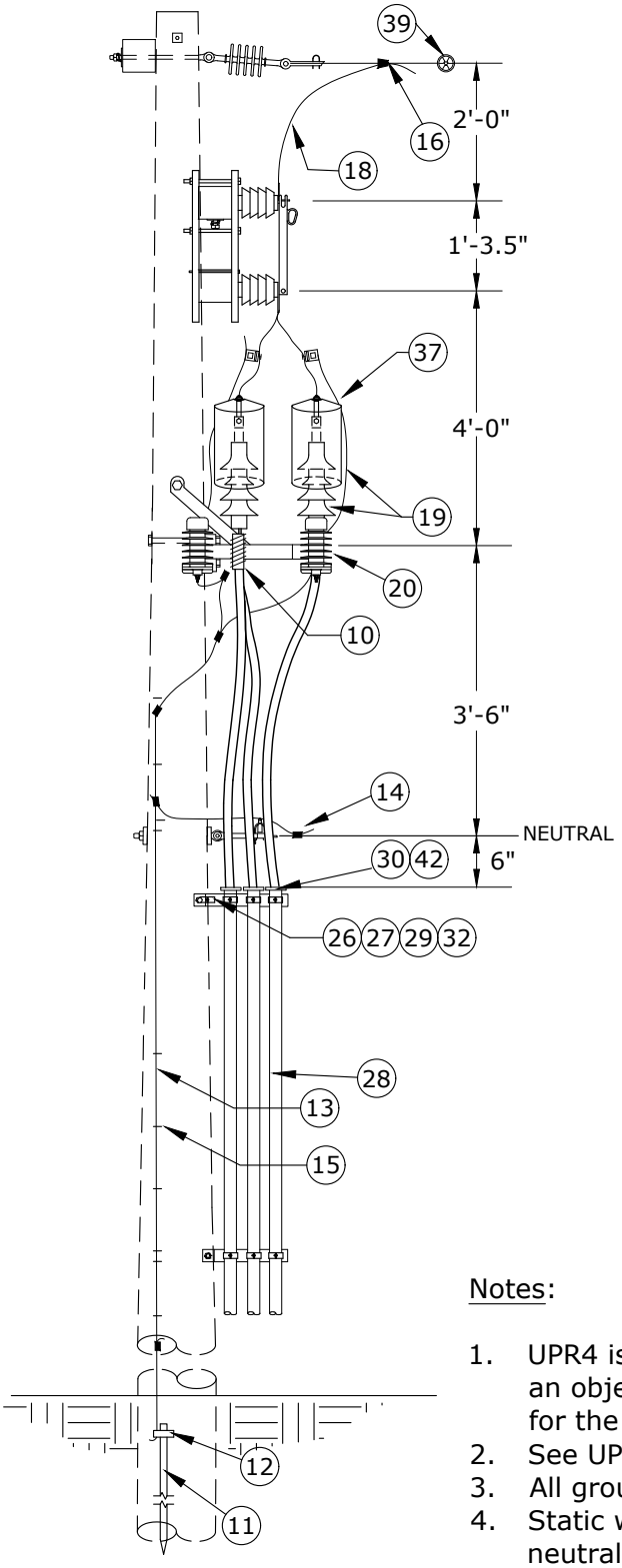

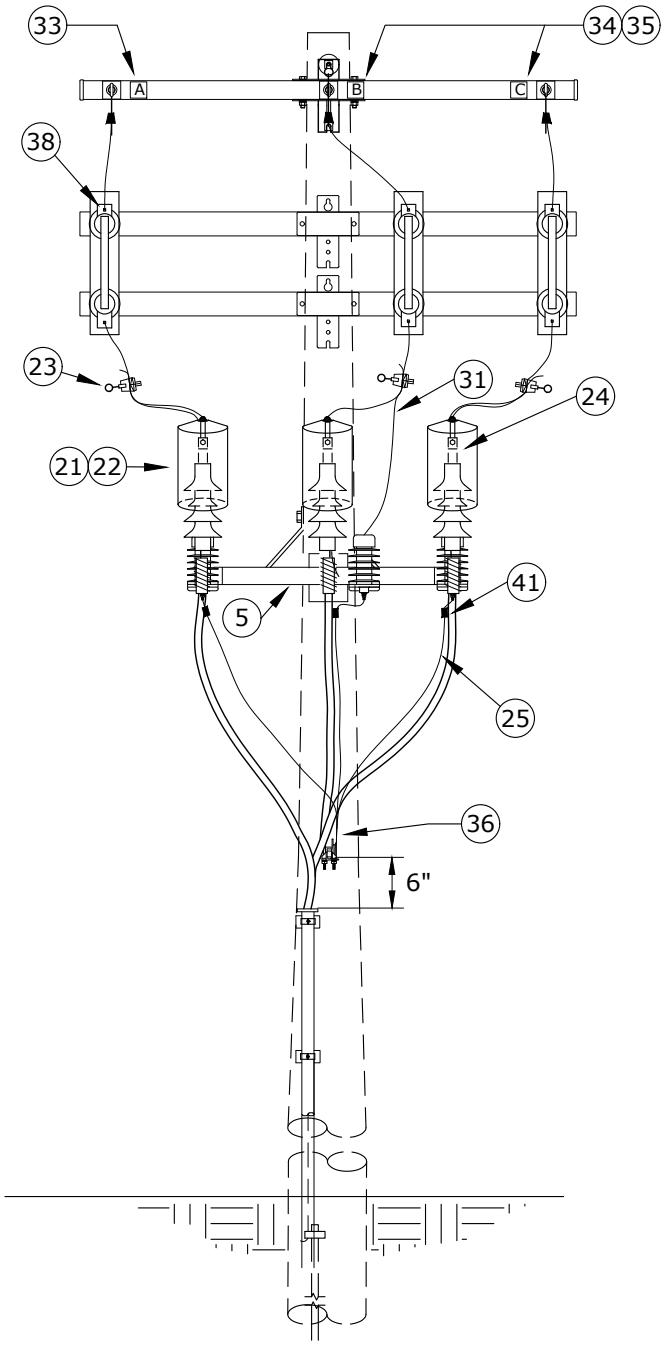

Notes:

1. UPR4 is the preferred standard. This standard is to be used if an object interferes w/ the switch handle of UPR4. See UPR4 for the recommended construction.
2. See UPR2 for grounding details.
3. All ground wire is #4 covered copper-clad steel.
4. Static wire ground when required. DO NOT connect to neutral. See N2 for static wire details. Engineer must call for static wire ground separately.
5. Avoid sharp turns in arrester grounds and primary leads.
6. 2/0 CU from terminators to overhead neutral for all 1000MCM construction.

Rev 1 - Removed extra 2/0 Cu neutral for substation get-a-ways, added 4/0-2/0 crimpet and support grips, and changed ground to Cu-clad steel grounds.

Clark Public Utilities

CONSTRUCTION STANDARDS

1000MCM CABLE RISER
WITH 600 AMP DISCONNECTS

REVISIONS

R	DATE	ENGR	OPS
1	12/9/22	CRM	GM

PAGE: 1 of 3

UPR5

CAD FILE: UPR5

APP: CM/AH
DATE: 1/13/10

SECTION 1600

CR23B

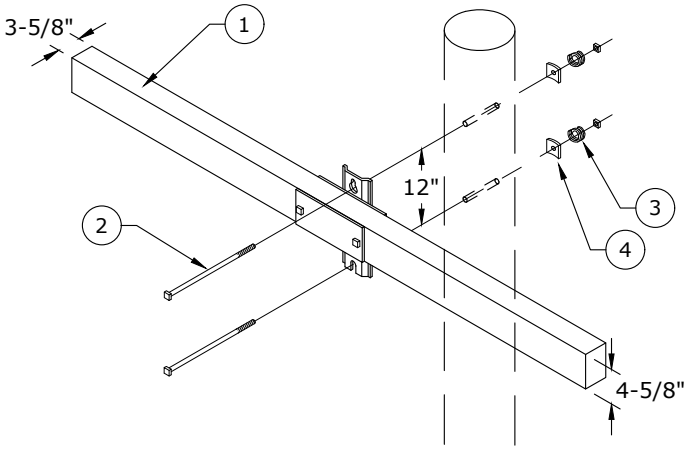

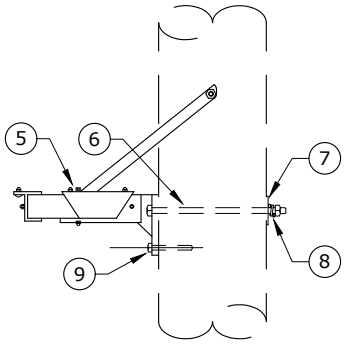

BR10

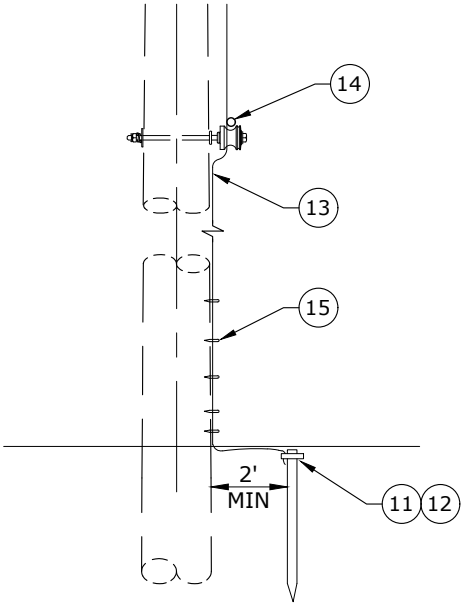

N1

Rev 1 - Removed extra 2/0 Cu neutral for substation get-a-ways, added 4/0-2/0 crimpets and support grips, and changed ground to Cu-clad steel grounds.

Clark Public Utilities

CONSTRUCTION STANDARDS

1000MCM CABLE RISER
WITH 600 AMP DISCONNECTS

REVISIONS

R	DATE	ENGR	OPS
1	12/9/22	CRM	GM

PAGE: 2 of 3

UPR5

CAD FILE: UPR5

APP: CM/AH

DATE: 1/13/10

SECTION 1600

Rev 1 - Removed extra 2/0 Cu neutral for substation get-a-ways, added 4/0-2/0 crimpets and support grips, and changed ground to Cu-clad steel grounds.

ITEM NO	DESCRIPTION	UPR5 CR23B (2) QTY	S/N
1	Crossarm, Distribution, Fiberglass, 10' Long x 3-5/8" Wide x 4-5/8" Tall	2	3031 ✲
2	Bolt, Machine, 5/8" x 14", Galv., 12,400 lb Ultimate Tensile	4	156 ✲
3	Washer, Lock, Spring, Double Coil, Galv, 5/8"	4	2217 ✲
4	Washer, Curved, Square, Cast, 3" x 3" x 3/8" Thick x 13/16" Hole	4	1392 ✲
ITEM NO	**DESCRIPTION**	**BR10 QTY**	**S/N**
5	Bracket, Terminator, Mount, 48", 1000MCM	1	2842 ✲
6	Bolt, Machine, 5/8" x 14", Galv, 12,400 lb Ultimate Tensile	1	156
7	Washer, Curved, Square, Cast, 3" x 3" x 3/8" Thick x 13/16" Hole, Galv	1	1392
8	Washer, Lock, Spring, Double Coil, Galv, 5/8"	1	2217
9	Screw, Lag, 1/2" x 4 1/2", Twist Drive, Drive Point	3	1132
10	Support, Cable, 1000MCM	3	2229
ITEM NO	**DESCRIPTION**	**N1 QTY**	**S/N**
11	Rod, Ground, 5/8" x 8'	1	1124
12	Clamp, Ground Rod, 5/8", Small, Bronze	1	281
13	Conductor, Copper-Clad Steel, #4 Cu Equivalent, 40% Annealed, Black Jacket with Green Stripe	40✲	1512 ✲
14	Connector, H-Tap, Al/Cu, Run #2 - 2/0 Str, Tap #6 - #1 Str	1	413
15	Staple, Ground Wire, Barbed, Galvanized, 1 1/2"	24✲	2707 ✲
ITEM NO	**DESCRIPTION**	**ADDITIONAL MATERIAL QTY**	**S/N**
16	Connector, Tap, Wedge, Run and Tap 336 ACSR and 397 AAC	3	2501
17	Conductor, OH, 600v, Cu, 2/0, 19-Str, XLPE, 80 mil, Soft-Drawn, 1C, RHW-2	30	381
18	Conductor, OH, AAC, 397.5, 19-Str, Bare, 1C, Canna	30	367
19	Terminator, 15kV, Cold-Shrink JCN, 1000MCM	3	2225
20	Arrester, Surge, 9 kV, MOV, Riser Pole	3	58
21	Connector, Compression, Lug, 2-Hole, 336 ACSR and 397 AAC	3	438
22	Connector, Compression, Lug, Al/Cu, Tin-Plated, 1000MCM to NEMA 2-Hole	3	1501
23	Clamp, Hot Line, GP1530, Line #6 Sol - 400MCM, Tap #6 Sol - 4/0 Str, Cu Only	3	284
24	Bolt, 1/2" x 2", w/ Flat and Belleville Washers, Assembly	6	1389
25	Conductor, OH, Cu, #4 Solid, Bare, Soft-Drawn, 1C	10	376
26	Screw, Lag, 1/2" x 4 1/2", Twist Drive, Drive Point	9	1132
27	Connector, Crimpet, Cu, Run 3/0 - 4/0 Str, Tap #6 Sol - #2 Str	3	458 ✲
28	Conduit, 4" x 10', Sch 80	90✲	2203
29	Clamp, Standoff Bracket, 4"	9	297
30	End Bell, 4", Sch 40, Long	3	2204
31	Conductor, OH, 600v, Cu, #2, 7-Str, XLPE, 60 mil, Soft-Drawn, 1C, RHW-2	15	393
32	Bracket, Standoff, 15" with Stop and Brace	3	227
33	Tag, Phase A	1	1280
34	Tag, Phase B	1	1281
35	Tag, Phase C	1	1282
36	Connector, Crimpet, Cu, Run and Tap 1/0 - 2/0 Str	2 ✲	457
37	Guard, Wildlife, Large, OH/UG Terminators	3	1676
38	Disconnect, 600 Amp, Single Blade	3	2531
39	Indicator, Fault, 400A, OH, Beacon with Signal Flag, Electric Field Reset	3	2558
40	Guard, Wildlife, Polymer Arrester	3	2583
41	Connector, Crimpet, Cu, Run 3/0 Str - 250 Str, Tap #6 Sol - 2/0 Str	3	459 ✲
42	Grip, Support, 4" Conduit, 1000MCM (1.625" to 2.5")	3	2521✲

Clark Public Utilities

CONSTRUCTION STANDARDS

1000MCM CABLE RISER
WITH 600 AMP DISCONNECTS

REVISIONS

R	DATE	ENGR	OPS
1	12/9/22	CRM	GM

PAGE: 3 of 3

UPR5

CAD FILE: UPR5

APP: CM/AH
DATE: 1/13/10

SECTION 1600

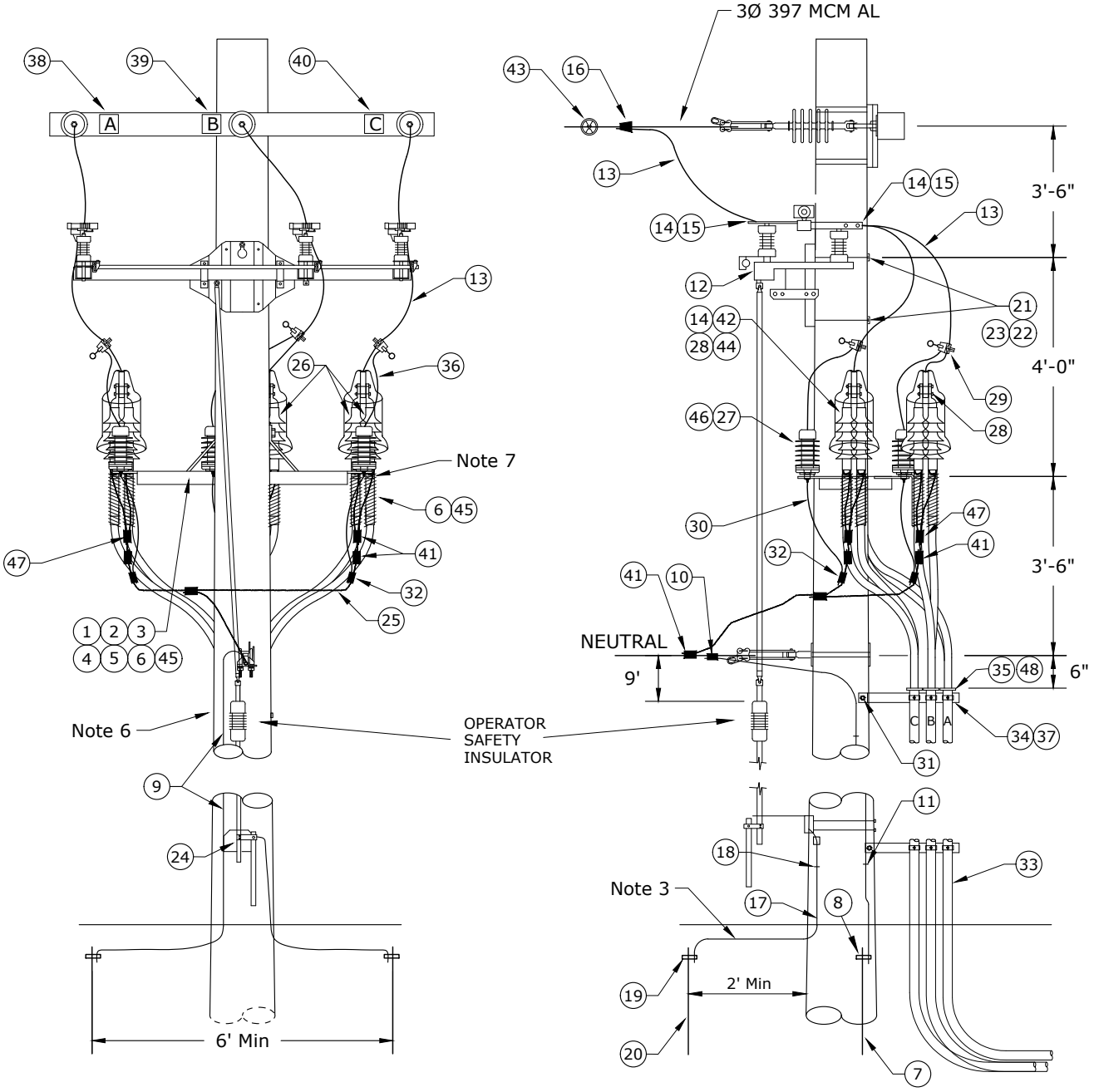

Notes:

1. This is the recommended 1000MCM riser standard for parallel runs.
2. See UPR2 for grounding details.
3. All ground wire is #4 Cu equivalent covered copper-clad steel.
4. Engineer must call for static wire ground separately, if needed. DO NOT connect to neutral. See N2 for details.
5. Avoid sharp turns in arrester ground and primary leads.
6. The pole must be 45' Class 2 or taller.
7. Install the cable positioners and arresters to the 48" equipment mounting brackets using carriage bolts provided with bracket.
8. 2/0 Cu from terminators to OH neutral for all 1000MCM.

Rev 1 - Added 4/0-2/0 crimpets and support grips.

Clark Public Utilities

CONSTRUCTION STANDARDS

PARALLEL 1000MCM CABLE RISER
WITH 3Ø SWITCH

REVISIONS

R	DATE	ENGR	OPS
1	12/9/22	CRM	GM

PAGE: 1 of 3

UPR6

CAD FILE: UPR6

APP: CM/DK

DATE: 11/2/18

SECTION 1600

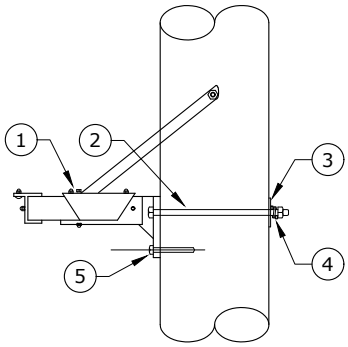

BR10

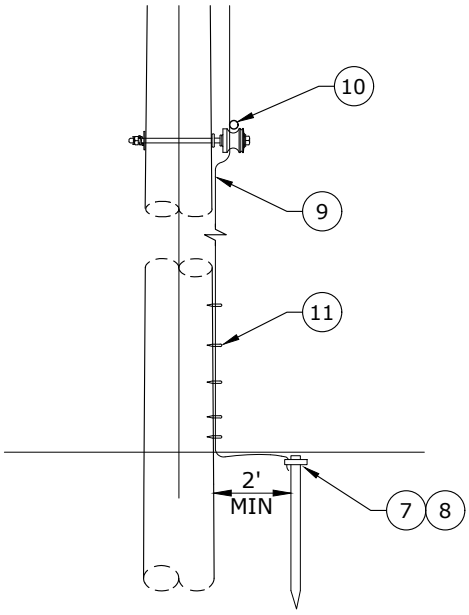

N1

Rev 1 - Added 4/0-2/0 crimpets and support grips.

ITEM NO.	DESCRIPTION	UPR6 BR10 QTY.	S/N
1	Bracket, Terminator Mount, 48", 1000 MCM Cable	1	2842
2	Bolt, Machine, 5/8" x 14", Galv., 12,400 lbs Ultimate Tensile	1	156
3	Washer, Curved, Square, Cast, 3" x 3" x 3/8" Thick x 13/16" Hole, Galv	1	1392
4	Washer, Lock, Spring, Double Coil Galv., 5/8"	1	2217
5	Screw, Lag, 1/2" x 4 1/2", Twist Drive, Drive Point	3	1132
6	Support, Cable, 1000 MCM	3	2229

ITEM NO.	DESCRIPTION	N1 QTY.	S/N
7	Rod, Ground, 5/8" x 8'	1	1124
8	Clamp, Ground Rod, 5/8", Small, Bronze	1	281
9	Conductor, Copper-Clad Steel, #4 Cu Equivalent, 40% Annealed, Black Jacket with Green Stripe	40	1512
10	Connector, H-Tap, Al/Cu, Run #2 - 2/0 Str, Tap #6 - #1 Str	1	413
11	Staple, Ground, Barbed, Galvanized, 1 1/2"	24	2707

Clark Public Utilities

CONSTRUCTION STANDARDS

PARALLEL 1000MCM CABLE RISER
WITH 3Ø SWITCH

REVISIONS

R	DATE	ENGR	OPS
1	12/9/22	CRM	GM

PAGE: 2 of 3

UPR6

CAD FILE: UPR6

APP: CM/DK

DATE: 11/2/18

SECTION 1600

ITEM NO.	DESCRIPTION	UPR6 ADDITIONAL MATERIAL QTY.	S/N
12	Switch, Loadbreak, Horizontal, 900A, 15kV	1	2432
13	Conductor, OH, AAC, 397.5, 19-Str, Bare, 1C, Canna	60	367
14	Connector, Compression, Lug, 2-Hole, 336 ACSR and 397 AAC	9	438
15	Bolt, 1/2" x 2", w/ Flat & Belleville Washers , Assembly	12	1389
16	Connector, Tap, Wedge, Run and Tap 336 ACSR - 397 AAC	3	2501
17	Conductor, Copper-Clad Steel, #4 Cu Equivalent, 40% Annealed, Black Jacket with Green Stripe	20	1512
18	Staple, Ground, Barbed, Galv, 1 1/2"	5	2707
19	Clamp, Ground Rod, 5/8", Small, Bronze	1	281
20	Rod, Ground, 5/8" x 8'	1	1124
21	Bolt, Machine, 3/4" x 16", Galv, 18,300 lb Ultimate Tensile	2	175
22	Washer, Curved, Cast, 4" x 4" w/ 13/16" Hole	2	1910
23	Washer, Lock, Spring, Double Coil Galv, 3/4"	2	2218
24	Lock, Padlock, 2" Hardened Stainless Steel Shackle	1	2564
25	Conductor, OH, 600v, Cu, 2/0, 19-Str, XLPE, 80 mil, Soft-Drawn, 1C, RHW-2	60	381
26	Terminator, 15 kV, Cold-Shrink JCN, 1000 MCM	6	2225
27	Arrester, Surge, 9 kV, MOV, Riser Pole	3	58
28	Connector, Compression, Lug, Al/Cu, Tin-Plated, 1000 MCM to NEMA 2-Hole	6	1501
29	Clamp, Hot Line, GP 1530, Line #6 Sol - 400MCM, Tap #6 Sol - 4/0 Str, Cu Only	3	284
30	Conductor, OH, Cu, #4 Solid, Bare, Soft-Drawn, 1C	10	376
31	Screw. Lag, 1/2" x 4 1/2", Twist Drive, Drive Point	6	1132
32	Connector, Crimpet, Cu, Run 3/0 - 4/0 Str, Tap #6 Sol - #2 Str	6	458 ✲
33	Conduit, 4" x 10', Sch 80	180	2203
34	Clamp, Standoff Bracket, 4"	18	297
35	End Bell, 4" Sch 40, Long	6	2204
36	Conductor, OH, 600v, Cu, #2, 7-Str, XLPE, 60 mil, Soft-Drawn, 1C, RHW-2	15	393
37	Bracket, Standoff, Riser, 24" with Stop and Brace	3	228
38	Tag, Phase A	1	1280
39	Tag, Phase B	1	1281
40	Tag, Phase C	1	1282
41	Connector, Crimpet, Cu, Run and Tap 1/0 - 2/0 Str	6 ✲	457
42	Guard, Wildlife, Large OH/UG Terminators	3	1676
43	Indicator, Fault, 400A, OH, Beacon with Signal Flag, Electric Field Reset	3	2558
44	Bolt, 1/2" x 2-1/2", w/ Flat & Belleville Washers, Assembly	6	2584
45	Support, Cable, 1000 MCM	3	2229
46	Guard, Wildlife, Polymer Arrester	3	2583
47	Connector, Crimpet, Cu, Run 3/0 Str - 250 Str, Tap #6 Sol - 2/0 Str	6	459 ✲
48	Grip, Support, 4" Conduit, 1000MCM (1.625" to 2.5")	6	2521 ✲

Clark Public Utilities

CONSTRUCTION STANDARDS

PARALLEL 1000MCM CABLE RISER
WITH 3Ø SWITCH

REVISIONS

R	DATE	ENGR	OPS
1	12/9/22	CRM	GM

PAGE: 3 of 3

UPR6

CAD FILE: UPR6

APP: CM/DK

DATE: 11/2/18

SECTION 1600

ASSEMBLY DIAGRAM
ONE ASSEMBLY PER 600A PHASE

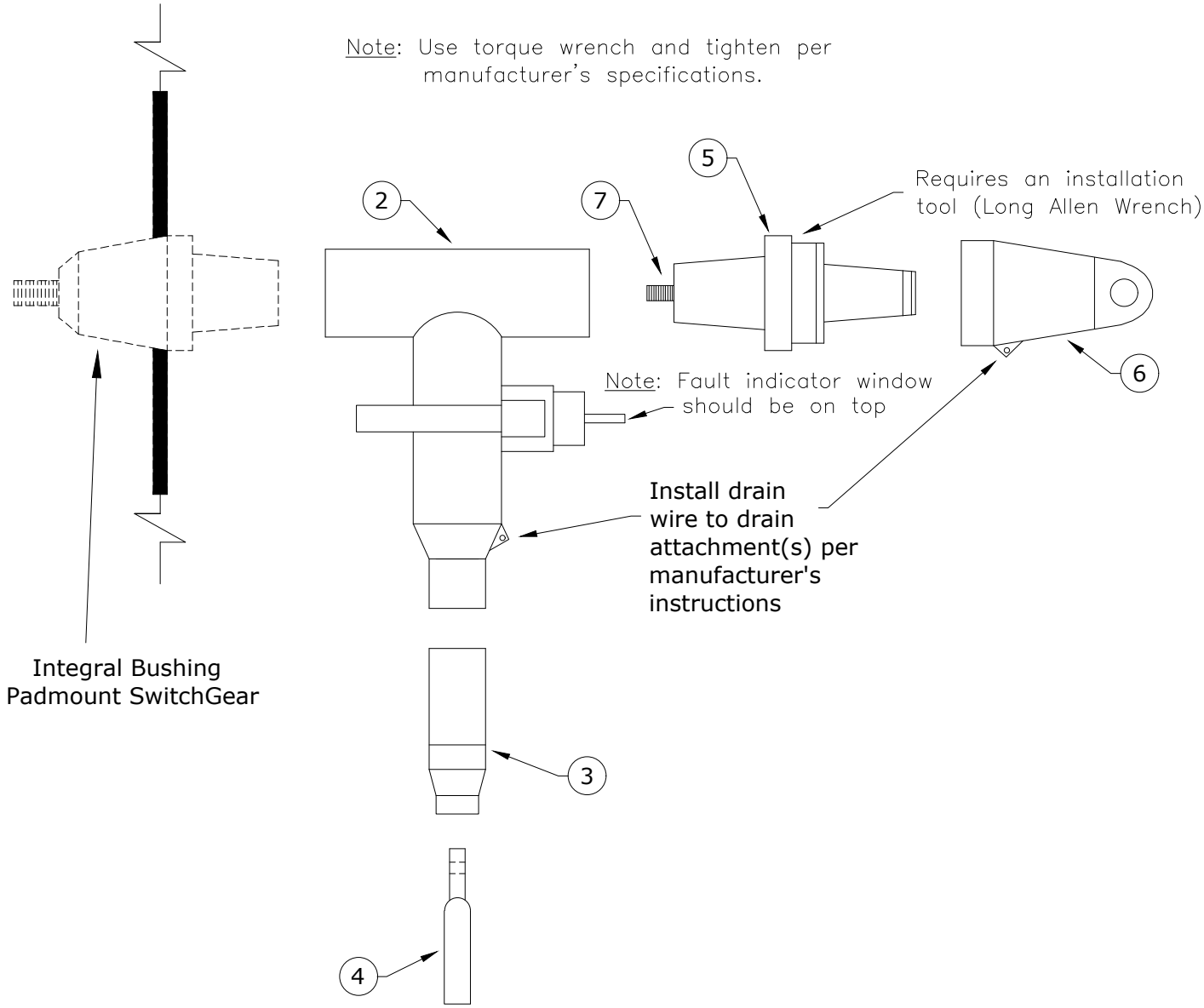

Rev 3: Added torque requirements and material corrections.

ITEM NO.	DESCRIPTION	USG1 QTY.	USG1 S/N
1	600A Elbow Kit For Switchgear	1	2692
	Each Kit Consists Of #2 to #7:		
2	*Housing, Elbow, 600A*	1	1825
3	*Adapter, Cable, 1000 MCM*	1	1
4	*Contact, Compression, 1000 MCM, Al, Non-Threaded Hole*	1	941
5	*Plug, Loadbreak Reducing Tap, 600A-200A*	1	1769
6	*Cap, Protective Insulated, 200A, 15kV*	1	265
7	*Stud, Al, 600A, T-Body to Reducer Plug*	1	2704
8	600A Elbow Sealing Kit	1	2376

Clark Public Utilities

CONSTRUCTION STANDARDS

PADMOUNT SWITCHGEAR
600 AMP ELBOW - 1000MCM CABLE

REVISIONS

R	DATE	ENGR	OPS
0	2/23/00	HWH	MA
1	1/11/04	LB	AH
2	4/29/09	CM	AH
3	12/5/19	CM	GM

PAGE: 1 of 1

USG1

CAD FILE: USG1

APP: GGW/RWG
DATE: 6/90

SECTION 1600

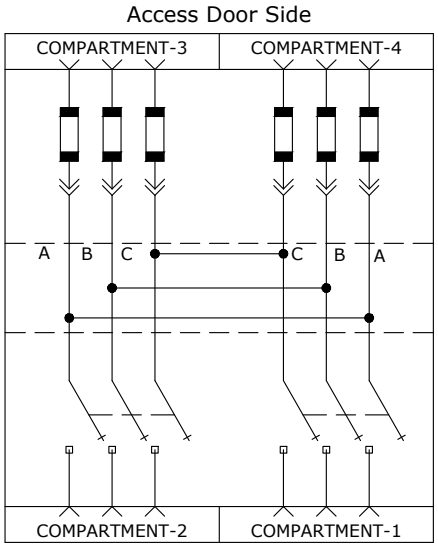

PME9

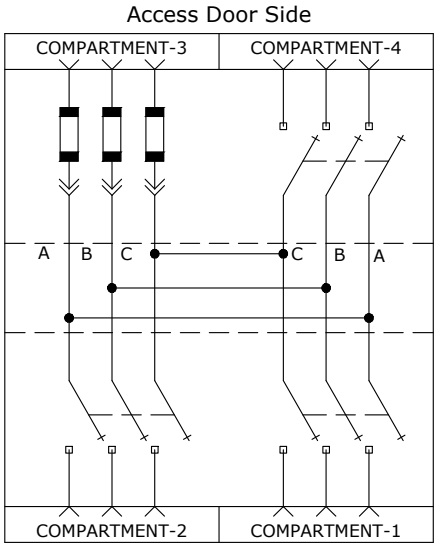

PME11

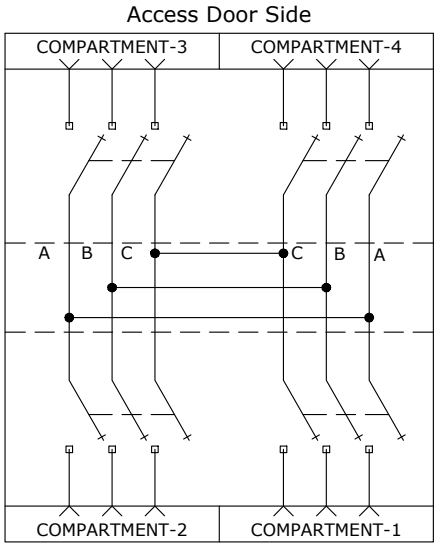

PME10

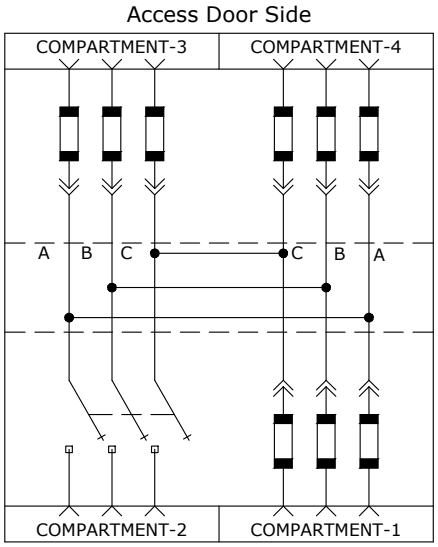

PME12

PADMOUNT DEADFRONT	PADMOUNT LIVEFRONT (Maintenance only)	600 AMP 3ø SWITCH	200 AMP 3ø POSITIONS
PME9	PMH9	2	2
PME10	PMH10	4	0
PME11	PMH11	3	1
PME12	PMH12	1	3

FUSE SIZE (SMU)	S/N
65E	2770
100E	2771
125E	2772

Contact Systems Engineering for proper fuse coordination.

Notes:

1. Material issue has the maximum number of fault indicators that may be used. Engineer to determine the actual number needed.
2. All new PMEs are ordered with the required number of 100E fuses for the configuration plus 3 spare 100E fuses.
3. If 65E or 125E fuses are required, the Engineer will have to call for the number needed plus 3 spares.

Rev. 4 - Changed to PME and PMH nomenclature, SMU fuses, removed separate fuse holders, added tie-downs, changed to 612 vault, and updated materials.

Clark Public Utilities

CONSTRUCTION STANDARDS

PADMOUNT SWITCHGEAR CHART

USE WITH STANDARD USG3

REVISIONS

R	DATE	ENGR	OPS
1	1/11/04	LB	AH
2	10/7/05	LB	AH
3	4/29/09	CM	AH
4	12/5/19	CM	GM

PAGE: 1 of 2

USG2

CAD FILE: USG2

APP: HWH/MA

DATE: 2/22/00

SECTION 1600

Rev. 4 - Changed to PME and PMH nomenclature, SMU fuses, removed separate fuse holders, added tie-downs, changed to 612 vault, and updated materials.

DEADFRONT (CPU Standard)

ITEM NO.	DESCRIPTION	S/N	PME9 QTY	PME10 QTY	PME11 QTY	PME12 QTY
1	Switch, Padmount, PME9, 2-600A Switches & 2-200A Fused Taps	2458	1	–	–	–
	PME10, 4-600A Switches	2452	–	1	–	–
	PME11, 3-600A Switches & 1-200A Fused Taps	2459	–	–	1	–
	PME12, 1-600A Switches & 3-200A Fused Taps	CONTACT STANDARDS ENGINEERING - NOT STOCKED				
2	600A Elbow Kit For Switchgear (USG1 Kit)	2692	6	12	9	3
	Each Kit Consists Of #3 to #8:					
3	*Housing, Elbow, 600A*	1825	6	12	9	3
4	*Adapter, Cable, 1000 MCM*	1	6	12	9	3
5	*Contact, Compression, 1000 MCM, Al, Non-Threaded Hole*	941	6	12	9	3
6	*Plug, Loadbreak Reducing Tap, 600A-200A*	1769	6	12	9	3
7	*Cap, Protective Insulated, 200A, 15kV*	265	6	12	9	3
8	*Stud, Al, 600A, T-Body to Reducer Plug*	2704	6	12	9	3
9	Elbow, Sealing Kit, 1000MCM 175 & 220 mil	2376	6	12	9	3
10	Conductor, Cu, 2/0, 1C, 7-Str, Bare, Soft Drawn	379	40	50	45	35
11	Connector, Crimpet, Cu, Run 4/0 Str, Tap 1/0 - 2/0 Str	459	6	12	9	3
12	Connector, Crimpet, Cu, Run 1/0 - 2/0 Str, Tap 1/0 - 2/0 Str	457	2	4	3	1
13	Indicator, Fault, UG, 800A, Test-Point, Voltage-Reset, 3-phase	2695	1	3	2	–
14	Elbow, 200A, LB, 1/0, 175 & 220 mil, Test Point, 15 kV, Jacket Seal	1312	6	-	3	9
15	Cap, Protective, Insulated, 200A 15 kV	265	6	-	3	9
16	Bushing, Standoff, Insulated, 200A	252	6	-	3	9
17	Connector, Crimpet, Cu, Run & Tap #2 Sol/Str (2C2)	455	6	-	3	9
18	Connector, Crimpet, Cu, Run 1/0 - 2/0 Str, Tap #8 Sol - #2 Str	456	2	-	1	3
19	Strut, Slotted, 10', 1-5/8" x 1-5/8", 12 Ga Galv	2958	1	2	2	1
20	Anchor, Sleeve, 1/2" x 3", Stainless Steel, 3/8" Thread	2959	4	8	8	4
21	Washer, Flat, 3/8", (304) Stainless Steel	1398	4	8	8	4
22	Bracket, Wall Mount, Strut, 2-Hole, Galv	2960	2	4	4	2
23	Clamp, Cable, Strut, 1000 MCM, Mount	2961	6	12	9	3
24	Bolt, Machine, 1/2" x 1", (304) Stainless Steel	130	14	16	16	14
25	Nut, Spring-Loaded, Galv, 1/2" (Unistrut)	920	14	16	16	14

LIVEFRONT (Non-standard)

ITEM NO.	DESCRIPTION	S/N	PMH9 QTY	PMH10 QTY	PMH11 QTY	PMH12 QTY
1	Bolt, Machine, 1/2" x 2", SS	132	24	24	24	24
2	Clamp, Ground Rod	282	2	2	2	2
3	Conductor, 2/0 BC, 7 STR	379	50	50	50	50
4	Connector, Comp Lug YCA26-2NCU 2/0	431	6	–	3	9
5	Connector, Crimpet, 2/0 - 2/0	457	4	4	4	4
6	Rod, Ground, 5/8" x 8'	1124	2	2	2	2
7	2" x 1/2" Bolt Assembly	1389	24	24	24	24
8	Connector, Comp Lug, YA44-A3AL/CU 1000 MCM	1501	6	12	9	3
9	Vault, Concrete, 600 AMP SW, Mod. U-J-6	1541	1	1	1	1
10	Terminator, Outdoor, Molded Rubber 1/0	2214	6		3	9
11	Terminator, Outdoor, Butyl, 600 AMP, 1000 MCM	2225	6	12	9	3
12	Switch, Padmt, Linefront, PMH9		(#1265)	(#1264)	(#1468)	(#1471)
13	Holder, Fuse, Padmount, Livefront	745	6	–	3	9
14	Fault Indicator, 800A, Current-Reset, Beacon	2463	1	3	2	–
15	Caulk, Switchgear	2604	1	1	1	1

OBSOLETE

Clark Public Utilities

CONSTRUCTION STANDARDS

PADMOUNT SWITCHGEAR CHART

USE WITH STANDARD USG3

REVISIONS

R	DATE	ENGR	OPS
1	1/11/04	LB	AH
2	10/7/05	LB	AH
3	4/29/09	CM	AH
4	12/5/19	CM	GM

USG2

CAD FILE: USG2

APP: HWH/MA

DATE: 2/22/00

SECTION 1600

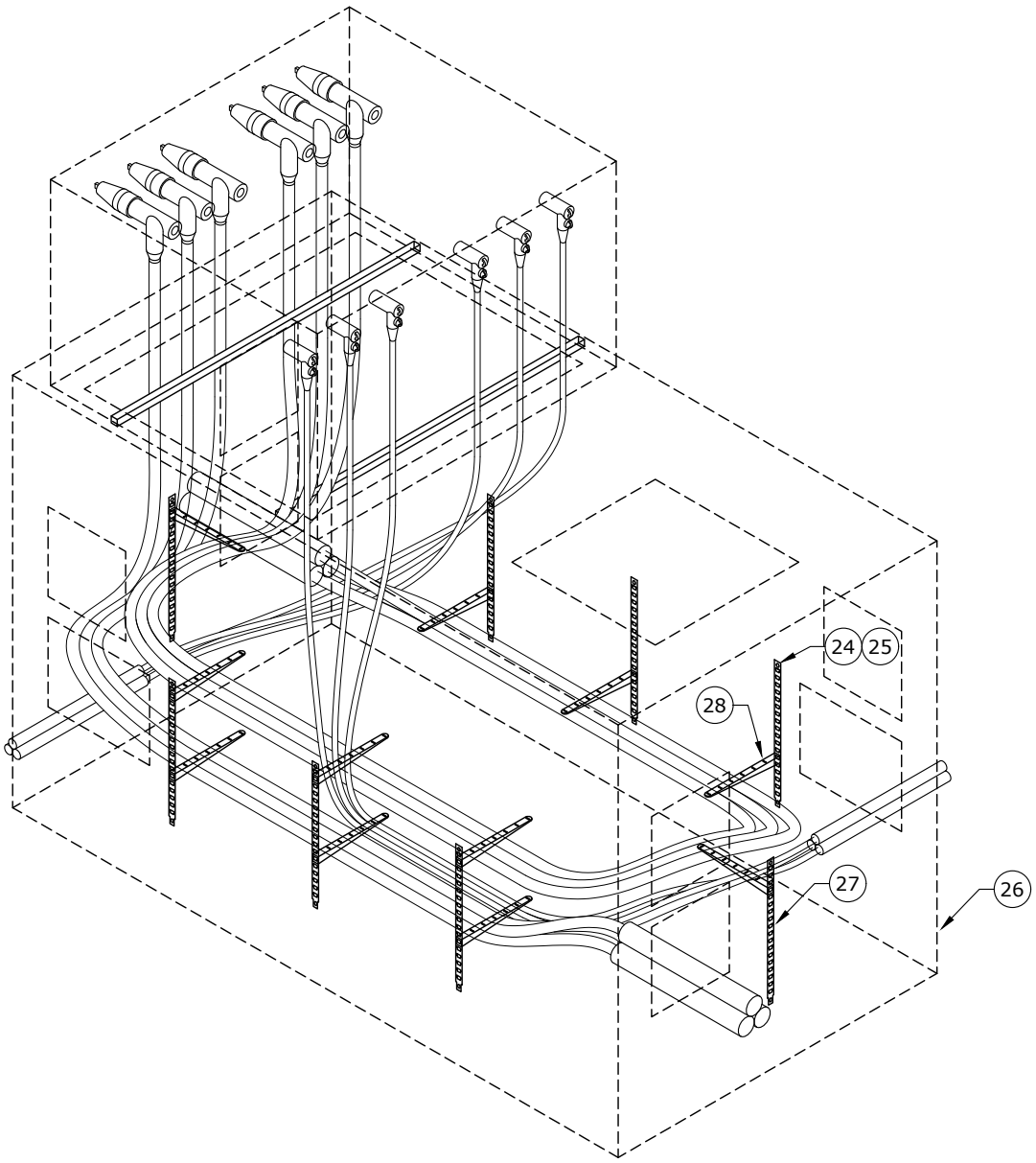

Notes:

1. Cable clamps required on 600A ways and not required on 200A ways. Install strut and cable clamps after setting switchgear to precisely land elbows on bushings.
2. Seal vacant conduits with reusable expanding duct plugs.
   2" - S/N 2955
   4" - S/N 2943
   Seal conduits with cable using inflatable seals.
   2" - S/N 2952
   4" - S/N 2943
3. For PME9 and PME12, face switchgear side with two fuse bays toward access door.
4. Engineer to call for temporary lid (S/N 2495) when switch and vault installed separately.

Rev. 4 - Fixed stock number in Note 4 for temporary lid.

Clark Public Utilities

CONSTRUCTION STANDARDS

DEADFRONT SWITCHGEAR
612 VAULT DETAIL
USE WITH STANDARD USG2

REVISIONS

R	DATE	ENGR	OPS
1	1/11/04	LB	AH
2	10/7/05	LB	AH
3	12/5/19	CM	GM
4	9/16/21	JDK	

PAGE: 1 of 6

USG3

CAD FILE: USG3

APP: HWH/MA
DATE: 2/22/00

SECTION 1600

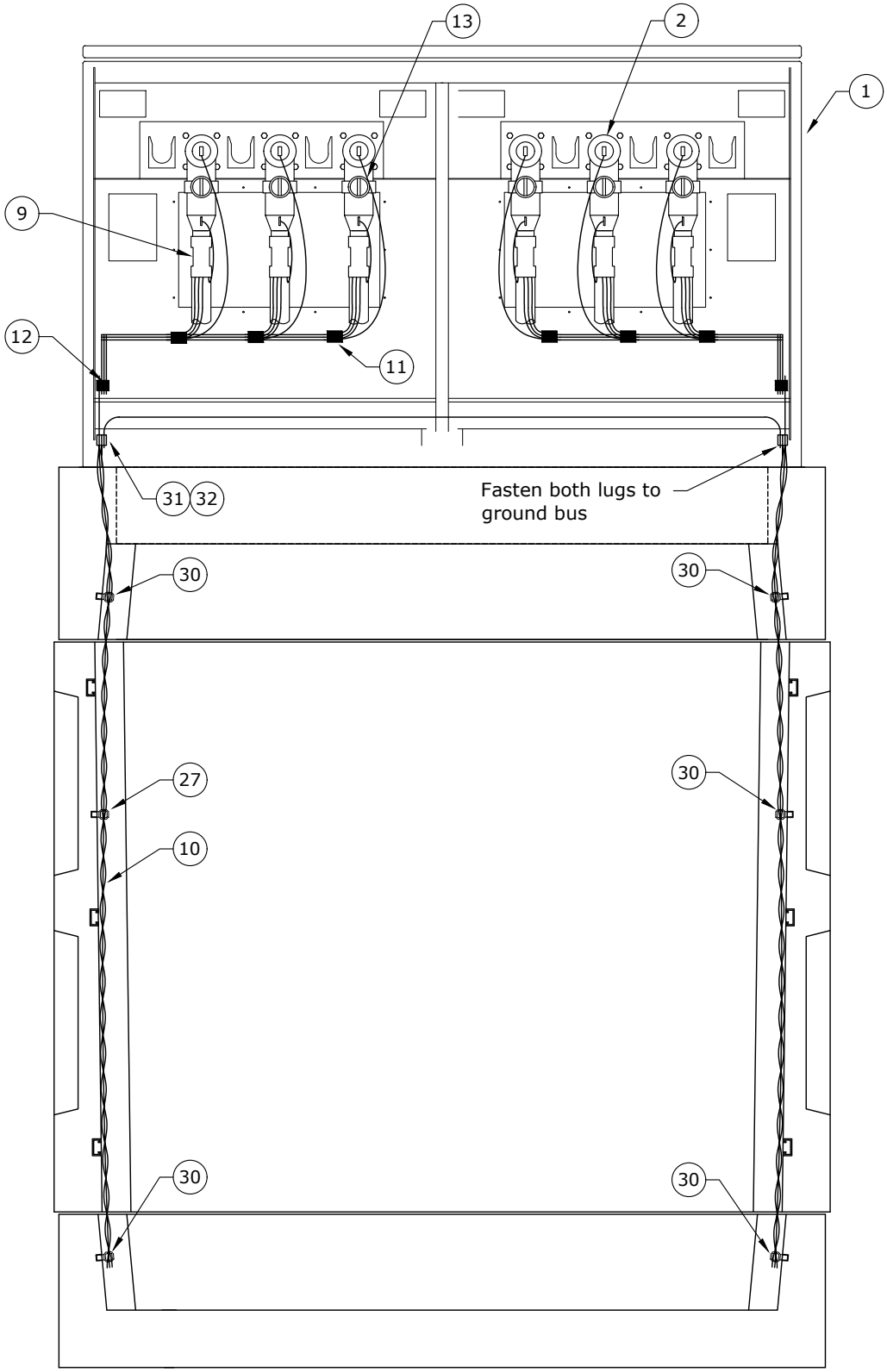

600A Elbow Detail

Rev. 4 - Fixed stock number in Note 4 for temporary lid.

Clark Public Utilities

CONSTRUCTION STANDARDS

DEADFRONT SWITCHGEAR
612 VAULT DETAIL
USE WITH STANDARD USG2

REVISIONS			
R	DATE	ENGR	OPS
1	1/11/04	LB	AH
2	10/7/05	LB	AH
3	12/5/19	CM	GM
4	9/16/21	JDK	

PAGE:		CAD FILE:	APP: HWH/MA	SECTION
2 of 6	USG3	USG3	DATE: 2/22/00	1600

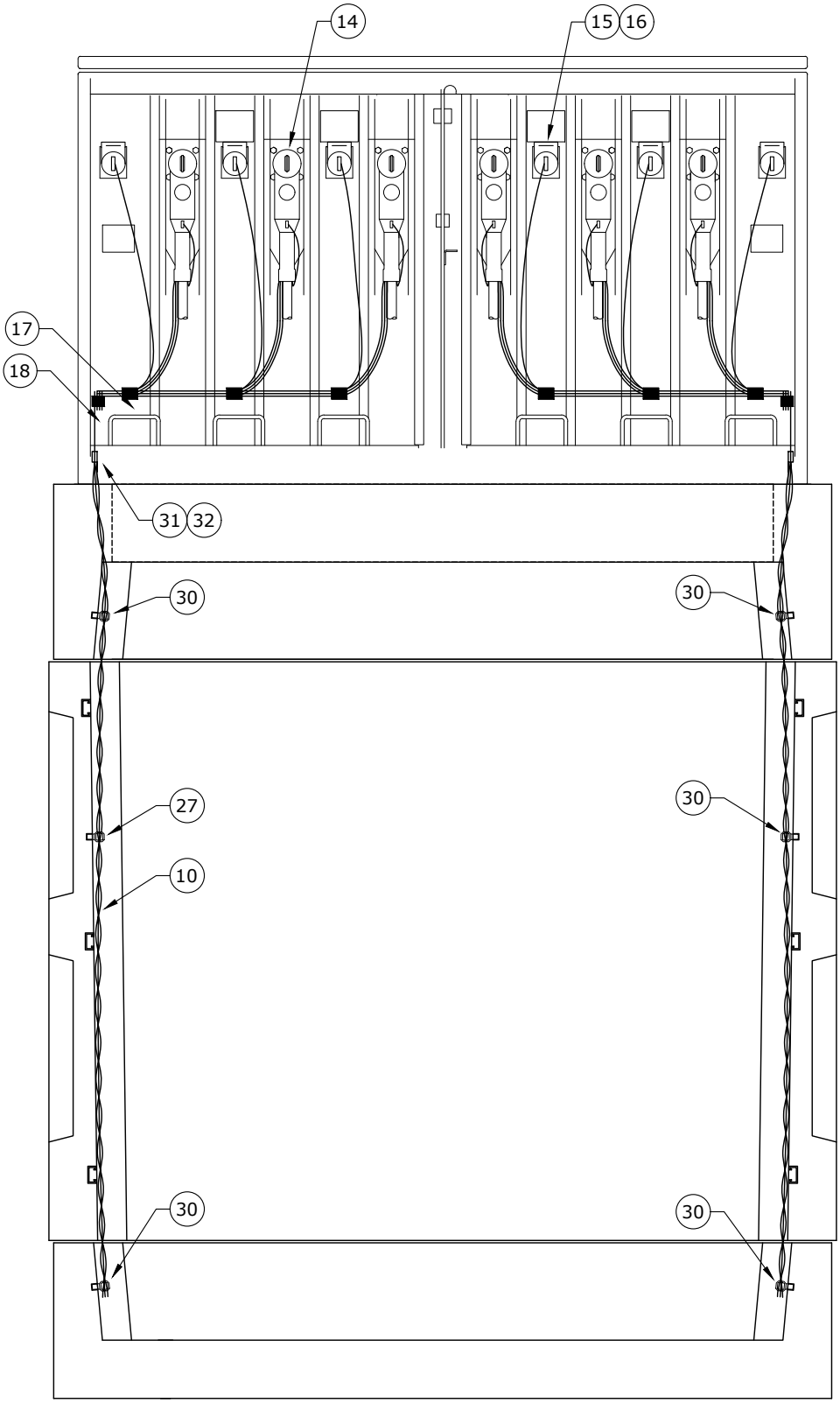

200A Elbow Detail

Rev. 4 - Fixed stock number in Note 4 for temporary lid.

Clark Public Utilities

CONSTRUCTION STANDARDS

DEADFRONT SWITCHGEAR
612 VAULT DETAIL
USE WITH STANDARD USG2

REVISIONS			
R	DATE	ENGR	OPS
1	1/11/04	LB	AH
2	10/7/05	LB	AH
3	12/5/19	CM	GM
4	9/16/21	JDK	

PAGE:		CAD FILE:	APP: HWH/MA	SECTION
3 of 6	USG3	USG3	DATE: 2/22/00	1600

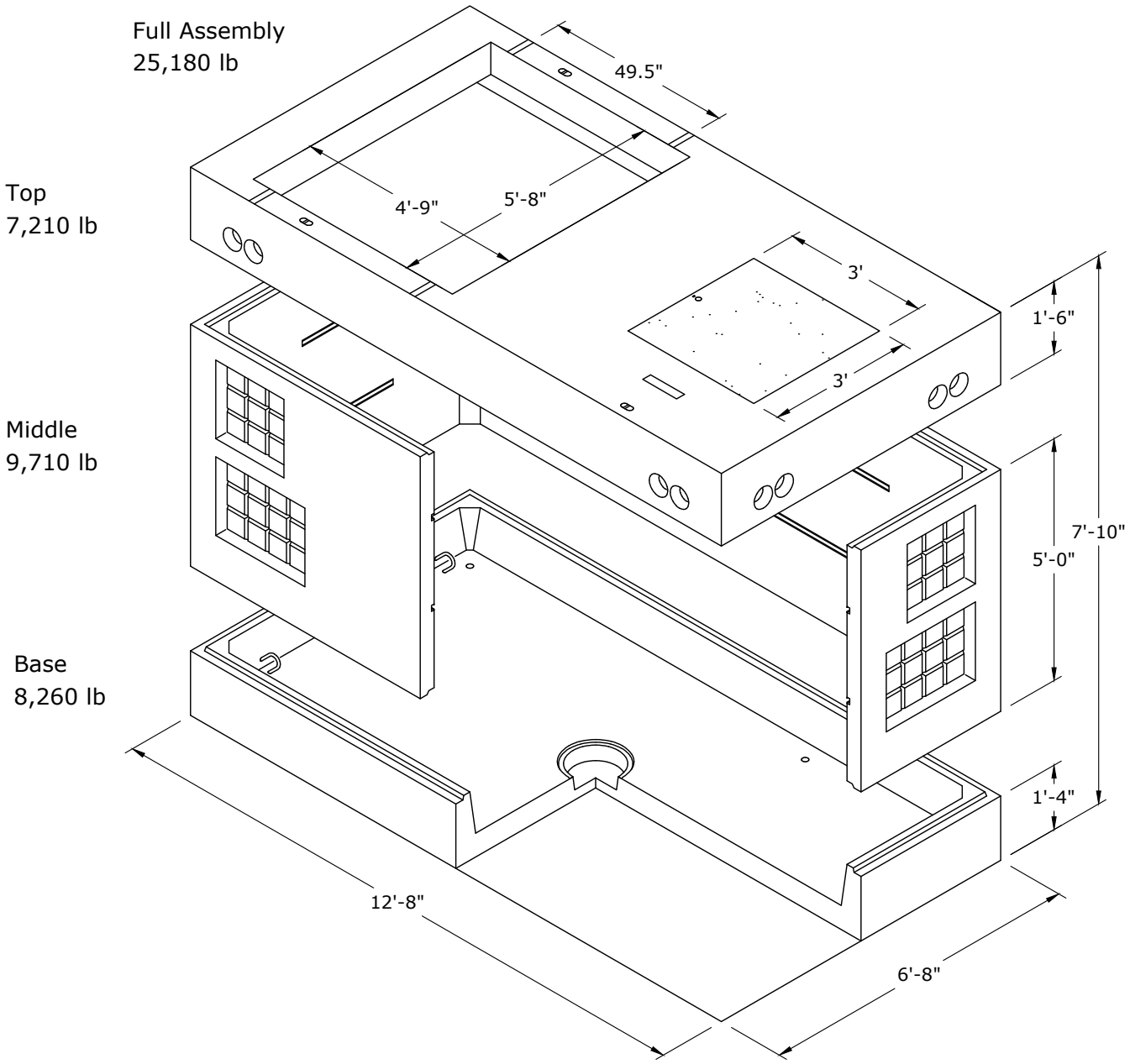

SIDE VIEW

Rev. 4 - Fixed stock number in Note 4 for temporary lid.

Clark Public Utilities

CONSTRUCTION STANDARDS

DEADFRONT SWITCHGEAR
612 VAULT DETAIL
USE WITH STANDARD USG2

REVISIONS

R	DATE	ENGR	OPS
1	1/11/04	LB	AH
2	10/7/05	LB	AH
3	12/5/19	CM	GM
4	9/16/21	JDK	

PAGE: 4 of 6

USG3

CAD FILE: USG3

APP: HWH/MA
DATE: 2/22/00

SECTION 1600

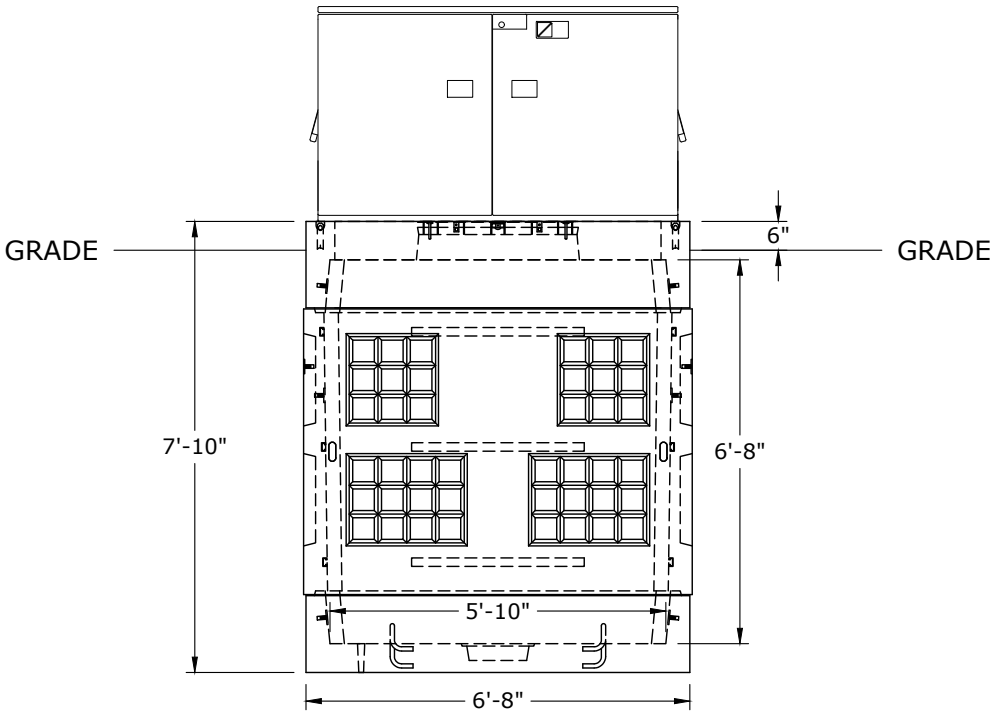

End View

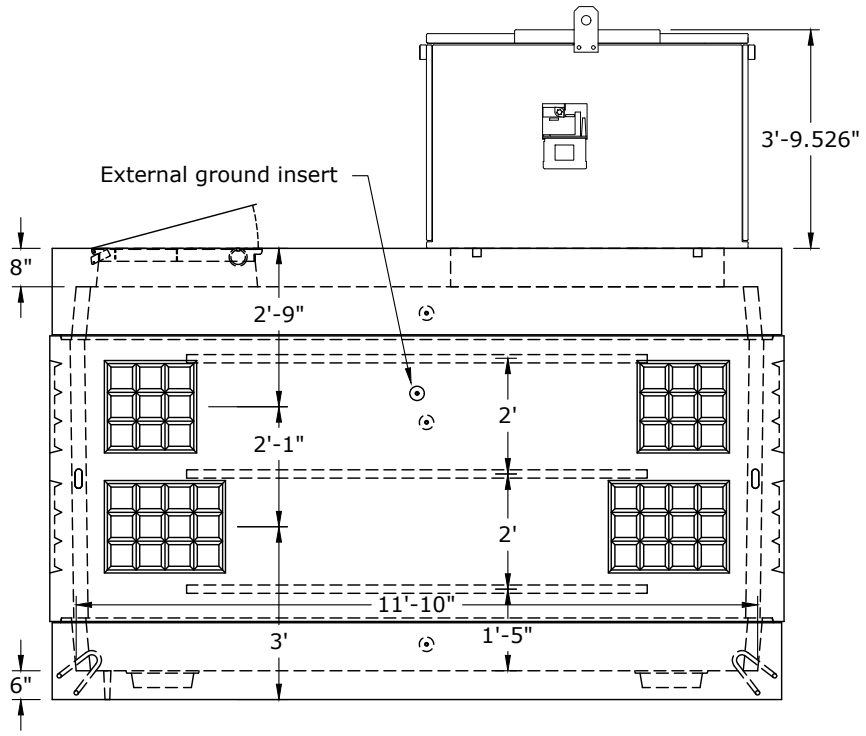

SIDE VIEW

Rev. 4 - Fixed stock number in Note 4 for temporary lid.

Clark Public Utilities

CONSTRUCTION STANDARDS

DEADFRONT SWITCHGEAR
612 VAULT DETAIL
USE WITH STANDARD USG2

REVISIONS

R	DATE	ENGR	OPS
1	1/11/04	LB	AH
2	10/7/05	LB	AH
3	12/5/19	CM	GM
4	9/16/21	JDK	

PAGE: 5 of 6

USG3

CAD FILE: USG3

APP: HWH/MA
DATE: 2/22/00

SECTION 1600

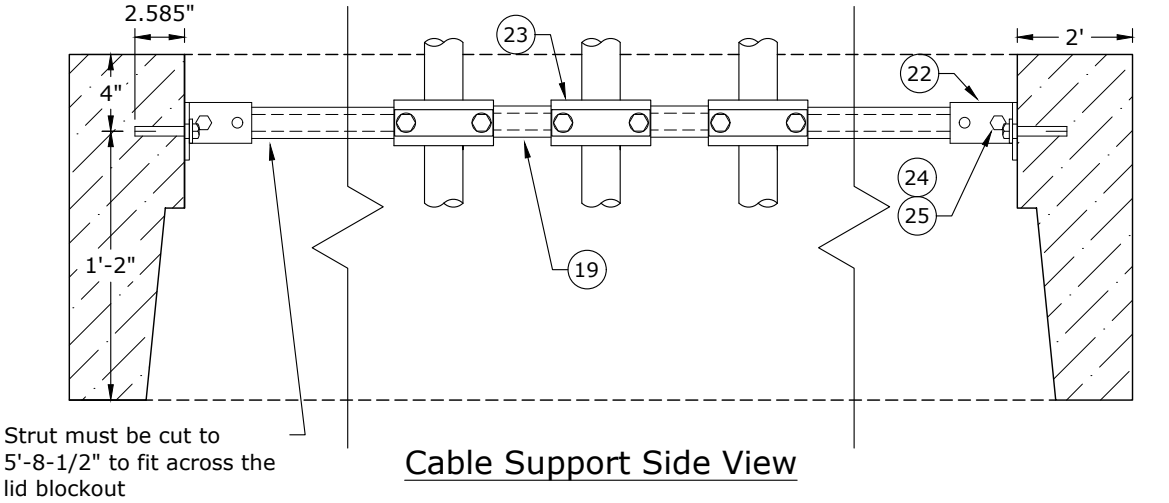

Cable Support Side View

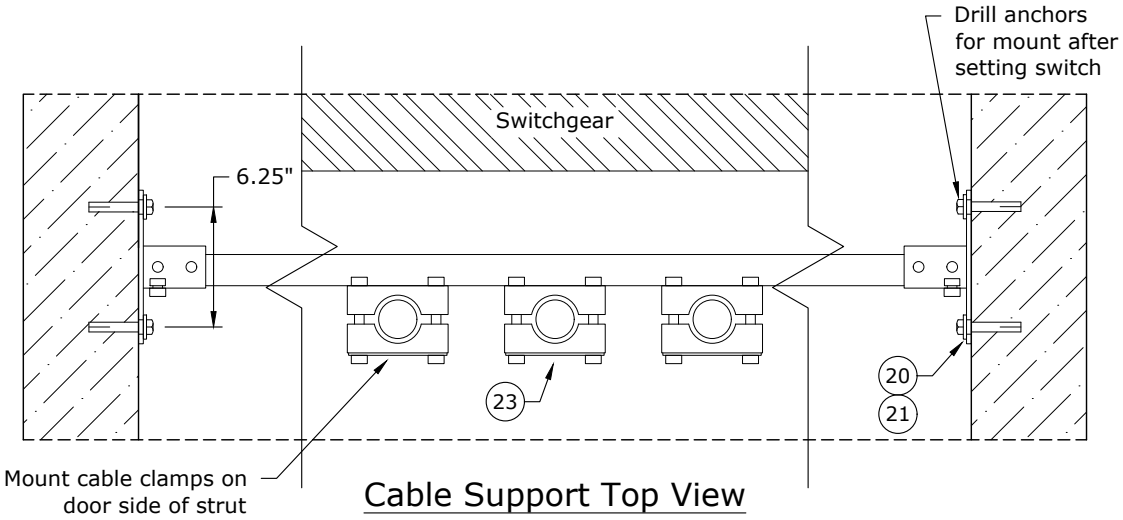

Cable Support Top View

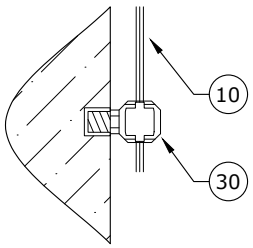

UFER Ground Connection

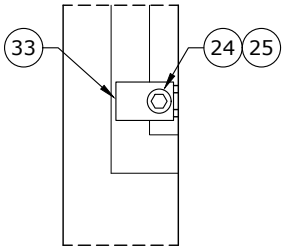

Switchgear to Vault Anchoring Detail

Rev. 4 - Fixed stock number in Note 4 for temporary lid.

ITEM NO.	DESCRIPTION	USG3	
		QTY	S/N
26	Vault, w/ Lid, 612-3LA, Ufer Ground, for PME Switchgear	1	2957
27	Rack, Cable, 30"	8	2861
28	Hook, Cable Rack, 18"	16	2863
29	Tie Wrap, Plastic, Releasable, 1/2" W x 19" L	36	2956
30	Lug, Grounding, #8 Sol - 2/0 Str, 4-Way	6	842
31	Connector, Compression Lug, Cu, 2/0 Str	4	431
32	Bolt, Washer, SS, 1/2" x 2" Assembly, w/ Si Br Nut	4	1389
33	Washer, 2" x 3" x 3/16" with 9/16" Slotted Hole	4	1415

Clark Public Utilities

CONSTRUCTION STANDARDS

DEADFRONT SWITCHGEAR
612 VAULT DETAIL
USE WITH STANDARD USG2

REVISIONS

R	DATE	ENGR	OPS
1	1/11/04	LB	AH
2	10/7/05	LB	AH
3	12/5/19	CM	GM
4	9/16/21	JDK	

PAGE: 6 of 6

USG3

CAD FILE: USG3

APP: HWH/MA

DATE: 2/22/00

SECTION 1600

FOR MAINTENANCE ONLY OR
WHEN STD USG3 VAULT WILL NOT FIT

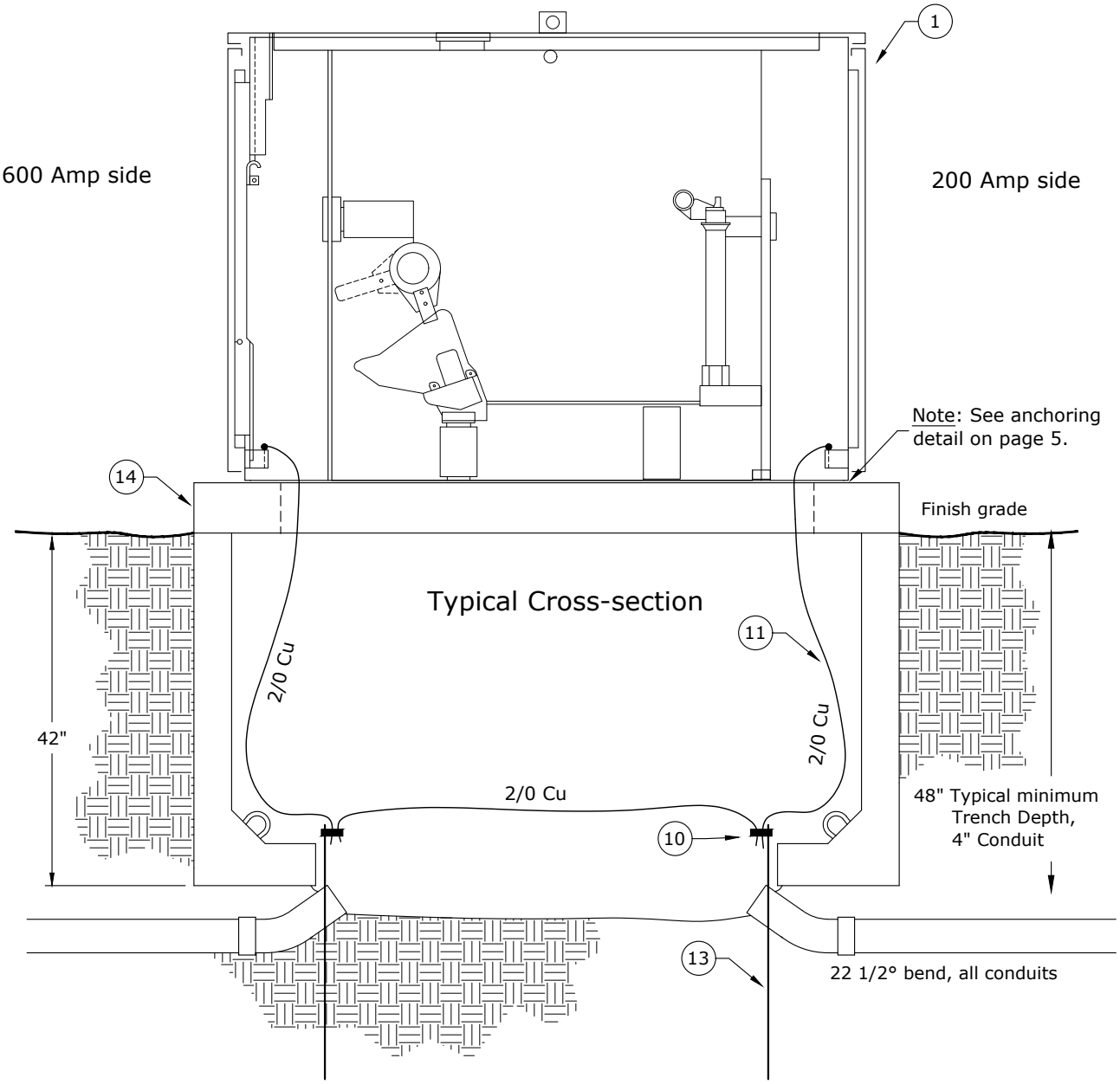

Notes:
1. Std USG3 is the preferred vault standard for PME switchgear.
2. Install 2 ground rods and 2/0 Cu bus loop around vault & bond to switchgear case in opposite corners.
3. Remote indicator for fault indicator is to be installed in the upper hinged-side of door of compartment with indicator.

Rev. 2 - Combined USG 5, 6, & 7, changed to maintenance or where 612 vault does not fit & added material issue.

Clark Public Utilities

CONSTRUCTION STANDARDS

DEADFRONT SWITCHGEAR ON 774 VAULT
FOR MAINTENANCE ONLY
OR WHEN STD USG3 VAULT WILL NOT FIT

REVISIONS

R	DATE	ENGR	OPS
1	1/11/04	LB	AH
2	8/8/22	CRM	GM

PAGE: 1 of 6

USG5

CAD FILE: USG5

APP: HWH/MA
DATE: 11/94

SECTION 1600

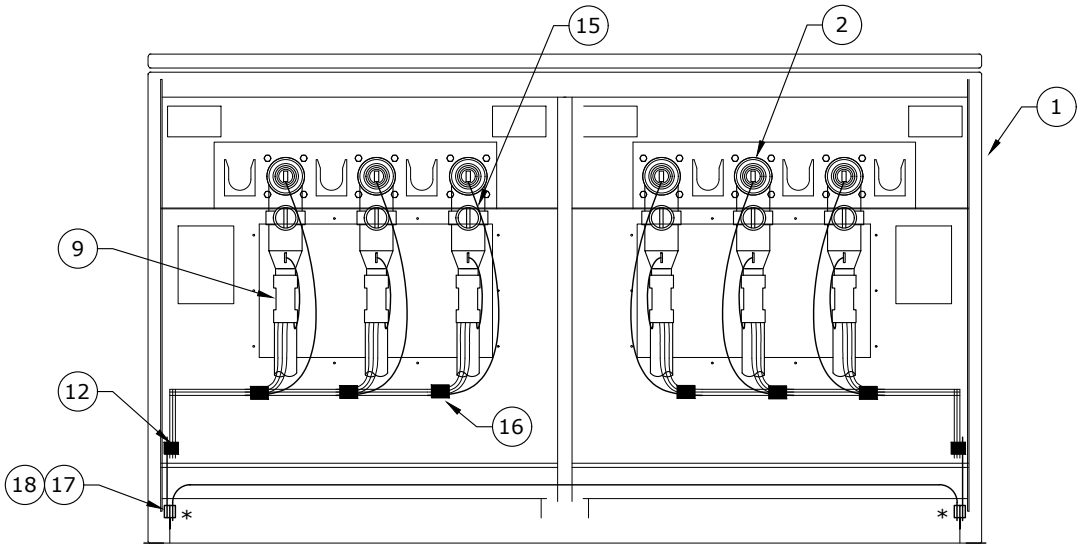

600A Elbow Detail

*Note: Bond concentric neutrals from cable to 2/0 Cu ground. Leave enough slack to move elbows.

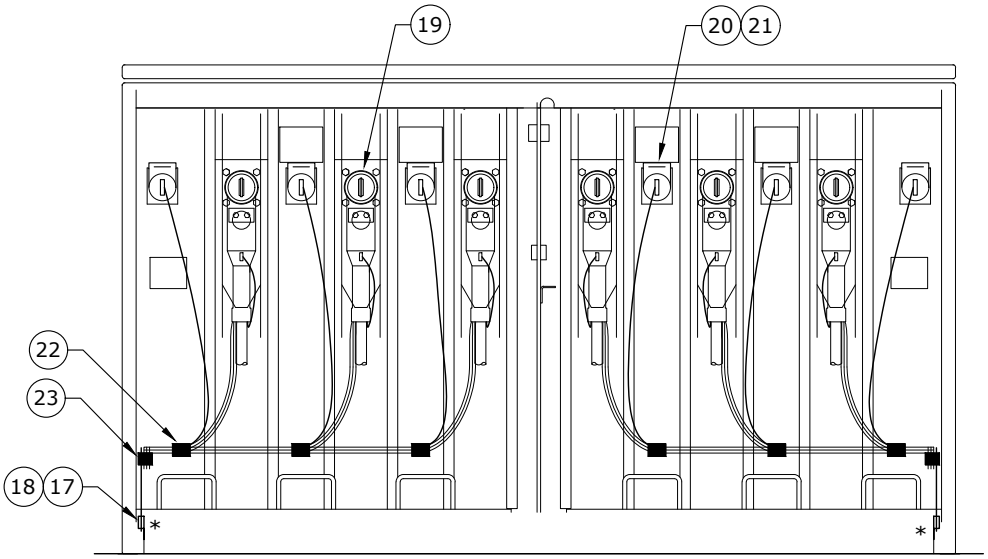

200A Elbow Detail

Rev. 2 - Combined USG 5, 6, & 7, changed to maintenance or where 612 vault does not fit, and added material issue.

Clark Public Utilities

CONSTRUCTION STANDARDS

DEADFRONT SWITCHGEAR ON 774 VAULT
FOR MAINTENANCE ONLY
OR WHEN STD USG3 VAULT WILL NOT FIT

REVISIONS

R	DATE	ENGR	OPS
1	1/11/04	LB	AH
2	8/8/22	CRM	GM

PAGE: 2 of 6

USG5

CAD FILE: USG5

APP: HWH/MA

DATE: 11/94

SECTION 1600

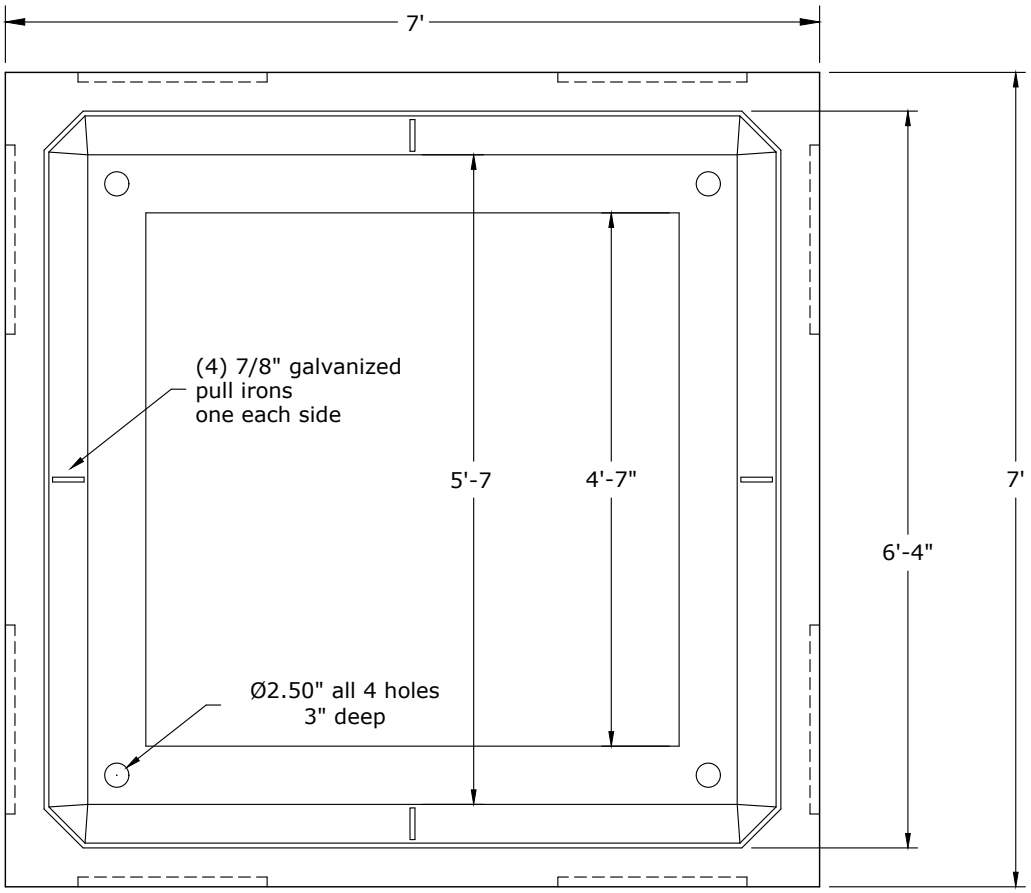

Top View (Vault Base)

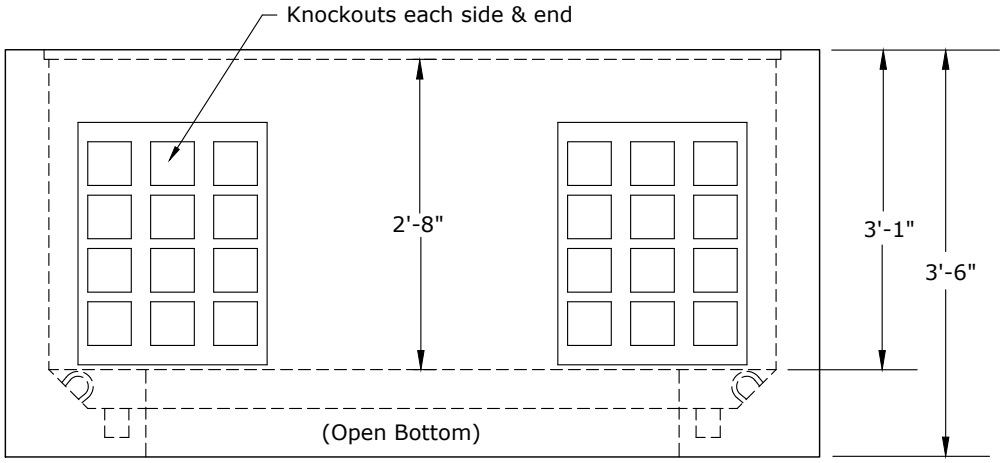

Front View (Vault Base)

Base Weight - 6,040 lb

Rev. 2 - Combined USG 5, 6, & 7, changed to maintenance or where 612 vault does not fit, and added material issue.

Clark Public Utilities

CONSTRUCTION STANDARDS

DEADFRONT SWITCHGEAR ON 774 VAULT
FOR MAINTENANCE ONLY
OR WHEN STD USG3 VAULT WILL NOT FIT

REVISIONS

R	DATE	ENGR	OPS
1	1/11/04	LB	AH
2	8/8/22	CRM	GM

PAGE: 3 of 6

USG5

CAD FILE: USG5

APP: HWH

DATE: 11/94

SECTION 1600

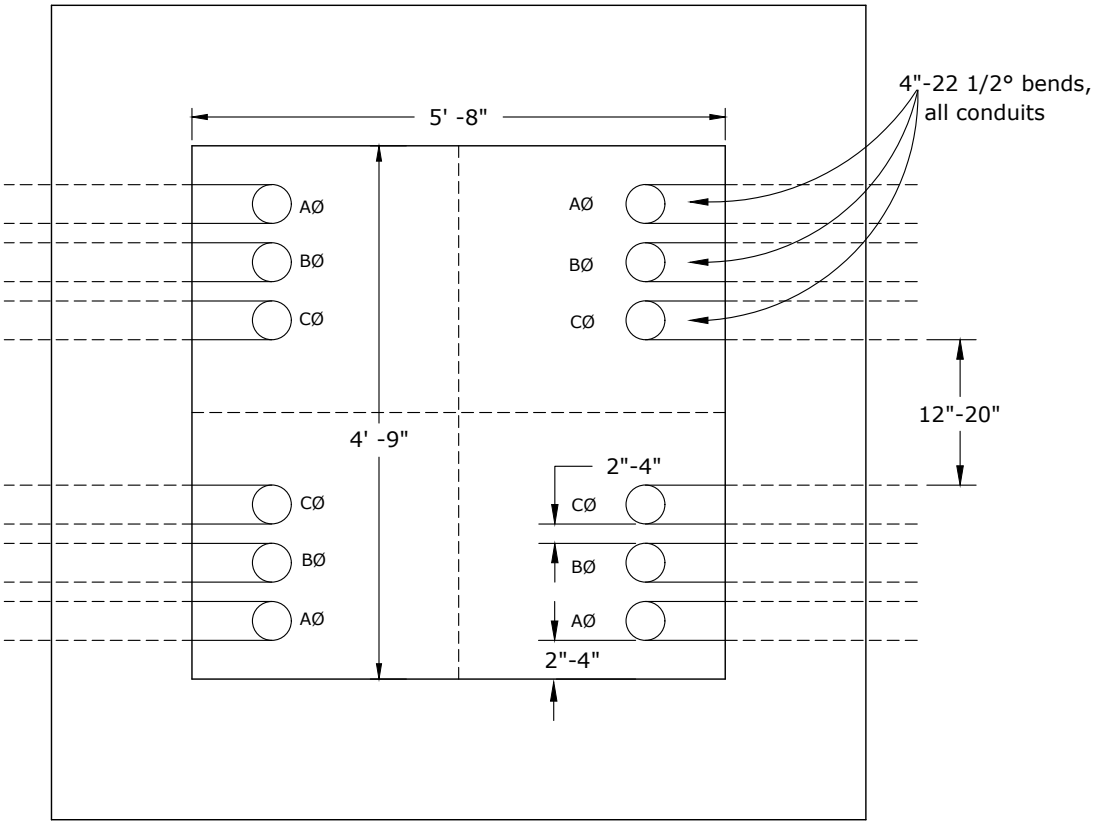

Top View

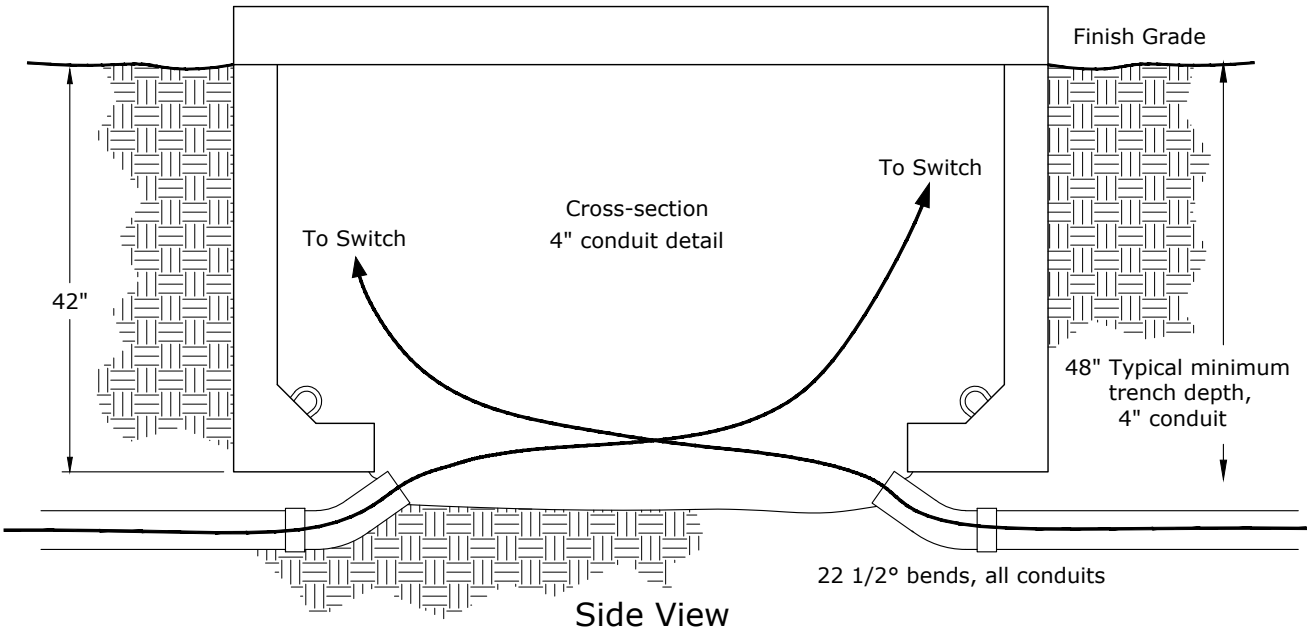

Side View

Rev. 2 - Combined USG 5, 6, & 7, changed to maintenance or where 612 vault does not fit, and added material issue.

Clark Public Utilities

CONSTRUCTION STANDARDS

DEADFRONT SWITCHGEAR ON 774 VAULT
FOR MAINTENANCE ONLY
OR WHEN STD USG3 VAULT WILL NOT FIT

REVISIONS

R	DATE	ENGR	OPS
1	1/11/04	LB	AH
2	8/8/22	CRM	GM

PAGE: 4 of 6

USG5

CAD FILE: USG5

APP: HWH/MA

DATE: 11/94

SECTION 1600

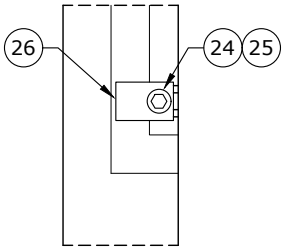

Switchgear to
Vault Anchoring Detail

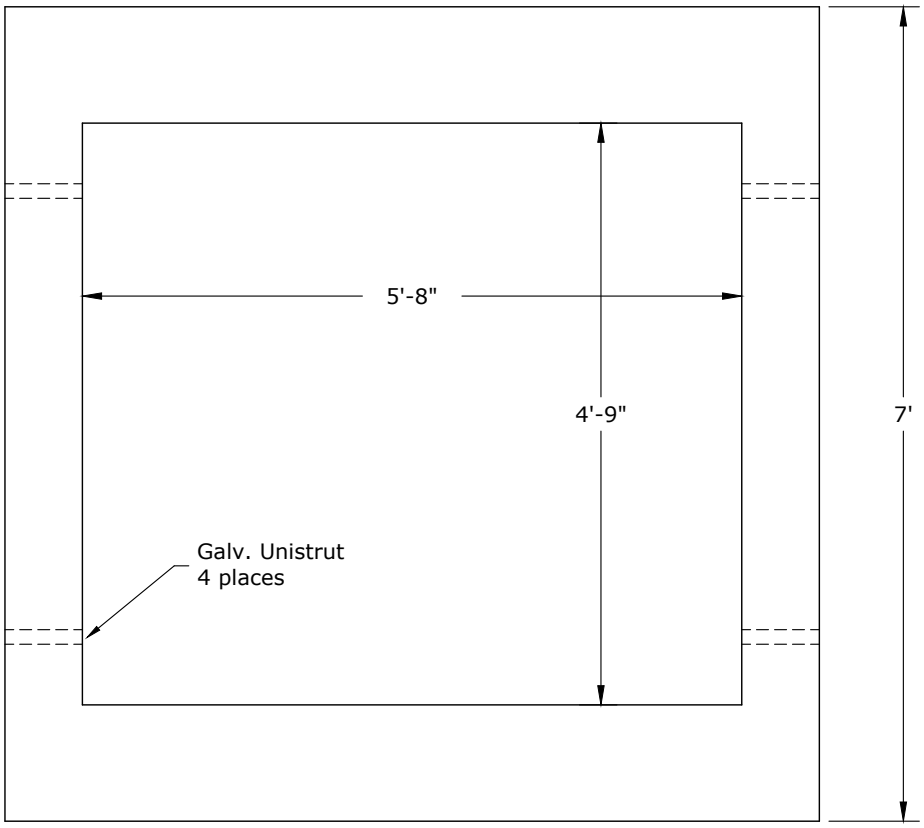

Top View (Vault Lid)

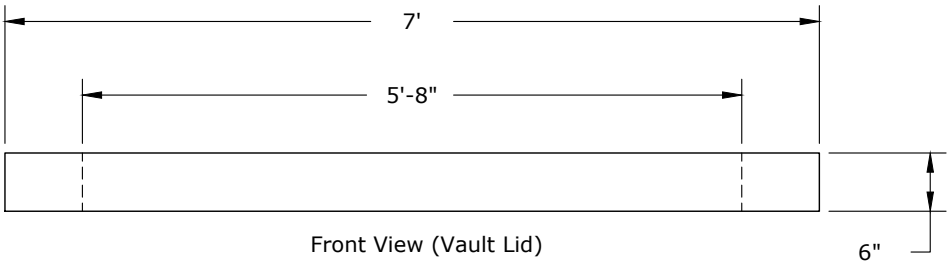

Front View (Vault Lid)

Lid Weight - 2,740 lb

Rev. 2 - Combined USG 5, 6, & 7, changed to maintenance or where 612 vault does not fit, and added material issue.

Clark Public Utilities

CONSTRUCTION STANDARDS

DEADFRONT SWITCHGEAR ON 774 VAULT
FOR MAINTENANCE ONLY
OR WHEN STD USG3 VAULT WILL NOT FIT

REVISIONS

R	DATE	ENGR	OPS
1	1/11/04	LB	AH
2	8/8/22	CRM	GM

PAGE: 5 of 6

USG5

CAD FILE: USG5

APP: HWH

DATE: 11/94

SECTION 1600

ITEM NO.	DESCRIPTION	S/N	7PME9 QTY	7PME10 QTY	7PME11 QTY	7PME12 QTY
1	Switch, Padmt, PME 9, 2-600 A Switches & 2-200 A Fused Bays	2458	1	–	–	–
	PME 10, 4-600 A Switches	2452	–	1	–	–
	PME 11, 3-600 A Switches & 1-200 A Fused Bay	2459	–	–	1	–
	PME 12, 1-600 A Switch & 3-200 A Fused Bays	Contact Standards Engineer - Not Stocked				
2	Elbow, 600A, NLB, Test Point, Kit For USG1	2692	6	12	9	3
	Each Kit Consists Of #3 to #8:					
3	*Elbow, 600 A, T-body*	1825	6	12	9	3
4	*Adapter, Cable, 1000 MCM*	1	6	12	9	3
5	*Contact, Compression, Al, 1000 MCM, Non-Threaded Hole*	941	6	12	9	3
6	*Plug, Loadbreak, Reducing Tap, 600A-200A*	1769	6	12	9	3
7	*Cap, Protective, Insulated, 200A, 15 kV*	265	6	12	9	3
8	*Stud, Al, 600A, T-body to Reducer Plug*	2704	6	12	9	3
9	Elbow, Sealing Kit, 1000MCM, 175mil & 220mil	2376	6	12	9	3
10	Clamp, Ground Rod, 5/8" Bronze, Large	282	2	2	2	2
11	Conductor, OH, Cu, 2/0, 7-Str, Bare, Soft Drawn, 1C	379	50	50	50	50
12	Connector, Crimpet, Cu, Run & Tap 1/0 - 2/0 Str	457	2	4	3	1
13	Rod, Ground, 5/8" x 8'	1124	2	2	2	2
14	Vault, Concrete, with Lid, 774, PME Switchgear	1541	1	1	1	1
15	Indicator, Fault, UG, 800A, Test-Point, Voltage-Reset, 3 phase	2695	1	3	2	–
16	Connector, Crimpet, Cu, Run 3/0 - 250 Str, Tap #6 Sol - 2/0 Str	459	6	12	9	3
17	Connector, Compression Lug, Cu, 2/0 Str	431	4	4	4	4
18	Bolt, Hexhead, SS, 1/2" x 2" Assembly, w/ Belleville & Flat Washers	1389	4	4	4	4
19	Elbow, 200A, LB, 1/0, 175 & 220 mil, Test Point, 15 kV, Jacket Seal	1312	6	-	3	9
20	Cap, Protective, Insulated, 200A 15 kV	265	6	-	3	9
21	Bushing, Standoff, Insulated, 200A	252	6	-	3	9
22	Connector, Crimpet, Cu, Run & Tap #2 Sol/Str (2C2)	455	6	-	3	9
23	Connector, Crimpet, Cu, Run 1/0 - 2/0 Str, Tap #8 Sol - #2 Str	456	2	-	1	3
24	Bolt, Machine, 1/2' x 1", (304) Stainless Steel	130	4	4	4	4
25	Nut, Spring-Loaded, Galv, 1/2" (Unistrut)	920	4	4	4	4
26	Washer, 2" x 3" x 13/16" w/ 9/16" Slotted Hole	1415	4	4	4	4

Additional Material If Needed

Description	S/N
Lid Only for Vault, Concrete, 774, PME Switchgear	1541B
Cover, Vault, 71" x 77", Fiberglass (Temp Only)	2495

Notes: 1. Material issue has the maximum number of fault indicators that may be used. Engineer to determine the actual number needed.
2. All new PMEs are ordered with the required number of 100E fuses for the configuration plus 3 spare fuses.
3. If 65E or 125E fuses are required, the Engineer will have to call for the number needed plus 3 spares.
4. Contact Systems Engineering for proper fuse coordination.

FUSE SIZE	S/N
65 E	661
100 E	662
125 E	663

Rev. 2 - Combined USG 5, 6, & 7, changed to maintenance or where 612 vault does not fit, and added material issue.

Clark Public Utilities

CONSTRUCTION STANDARDS

DEADFRONT SWITCHGEAR ON 774 VAULT
FOR MAINTENANCE ONLY
OR WHEN STD USG3 VAULT WILL NOT FIT

REVISIONS

R	DATE	ENGR	OPS
1	1/11/04	LB	AH
2	8/8/22	CRM	GM

USG5

CAD FILE: USG5

APP: HWH/MA
DATE: 11/94

SECTION 1600

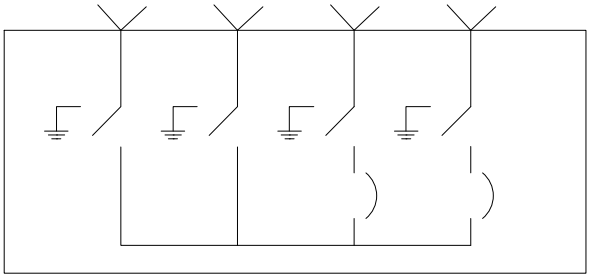

S/N 2910 - Model 422

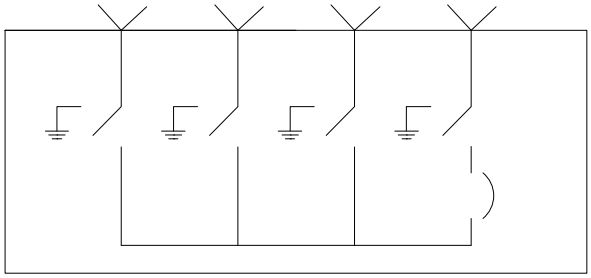

S/N 2911 - Model 431

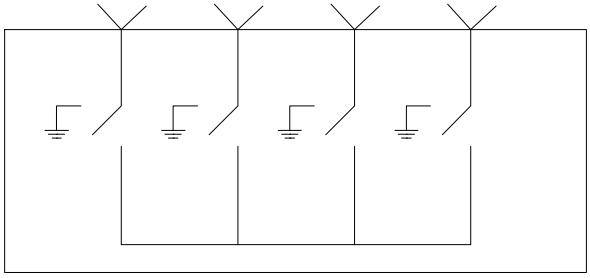

S/N 2924 - Model 440

BELOW GRADE SWITCH MODEL	S/N	600 AMP 3ø SWITCH	200 AMP 3ø FUSED POSITIONS
422	2910	2	2
431	2911	3	1
440	2924	4	0

ITEM NO.	DESCRIPTION	S/N	BG422 QTY	BG431 QTY	BG440 QTY
1	Switchgear, Below Grade, 422, 15kV, 12.5kA Isc	2910	1	–	–
	Switchgear, Below Grade, 431, 15kV, 12.5kA Isc	2911	–	1	–
	Switchgear, Below Grade, 440, 15kV, 12.5kA Isc	2924	–	–	1
2	Elbow, 600A, NLB, Test Point, Kit For USG1	2692	6	9	12
	Each Kit Consists Of Items #3 to #8:				
3	*Elbow, 600A, T-body*	1825	6	9	12
4	*Adapter, Cable, 1000 MCM*	1	6	9	12
5	*Contact, Compression, Al, 1000 MCM, Non-Threaded Hole*	941	6	9	12
6	*Plug, Loadbreak, Reducing Tap, 600A-200A*	1769	6	9	12
7	*Cap, Protective, Insulated, 200A, 15 kV*	265	12	12	12
8	*Stud, Al, 600A, T-body to Reducer Plug*	2704	6	9	12
9	Elbow, Sealing Kit, 1000MCM, 175 & 220 mil	2376	6	9	12
10	Connector, Crimpet, Cu, Run & Tap 3/0 to 4/0 Str	460	6	9	12
11	Elbow, 200A, LB, 1/0, 175 & 220 mil, Test Point, 15 kV, Jacket Seal	1312	6	3	-
12	Bushing, Feed-Thru, 200A, 15 kV	237	6	3	-
13	Connector, Crimpet, Cu, Run & Tap #2 Sol/Str (2C2)	455	6	3	-
14	Indicator, Fault, 400A, Test Point, Voltage Reset, 1Ø	2694	2	1	-
15	Indicator, Fault, 800A, Test Point, Voltage Reset, 3Ø	2695	1	2	3

Clark Public Utilities

CONSTRUCTION STANDARDS

BELOW GRADE SWITCHGEAR

USE WITH STANDARD USG9

REVISIONS			
R	DATE	ENGR	OPS

PAGE: 1 of 1

USG8

CAD FILE: USG8

APP: CRM/GM

DATE: 8/8/22

SECTION 1600

Note: Switch numbers and FB number labels are made by the warehouse. Labels are black on yellow and are 4" wide by 2" high. Systems Engineering assigns the numbers.

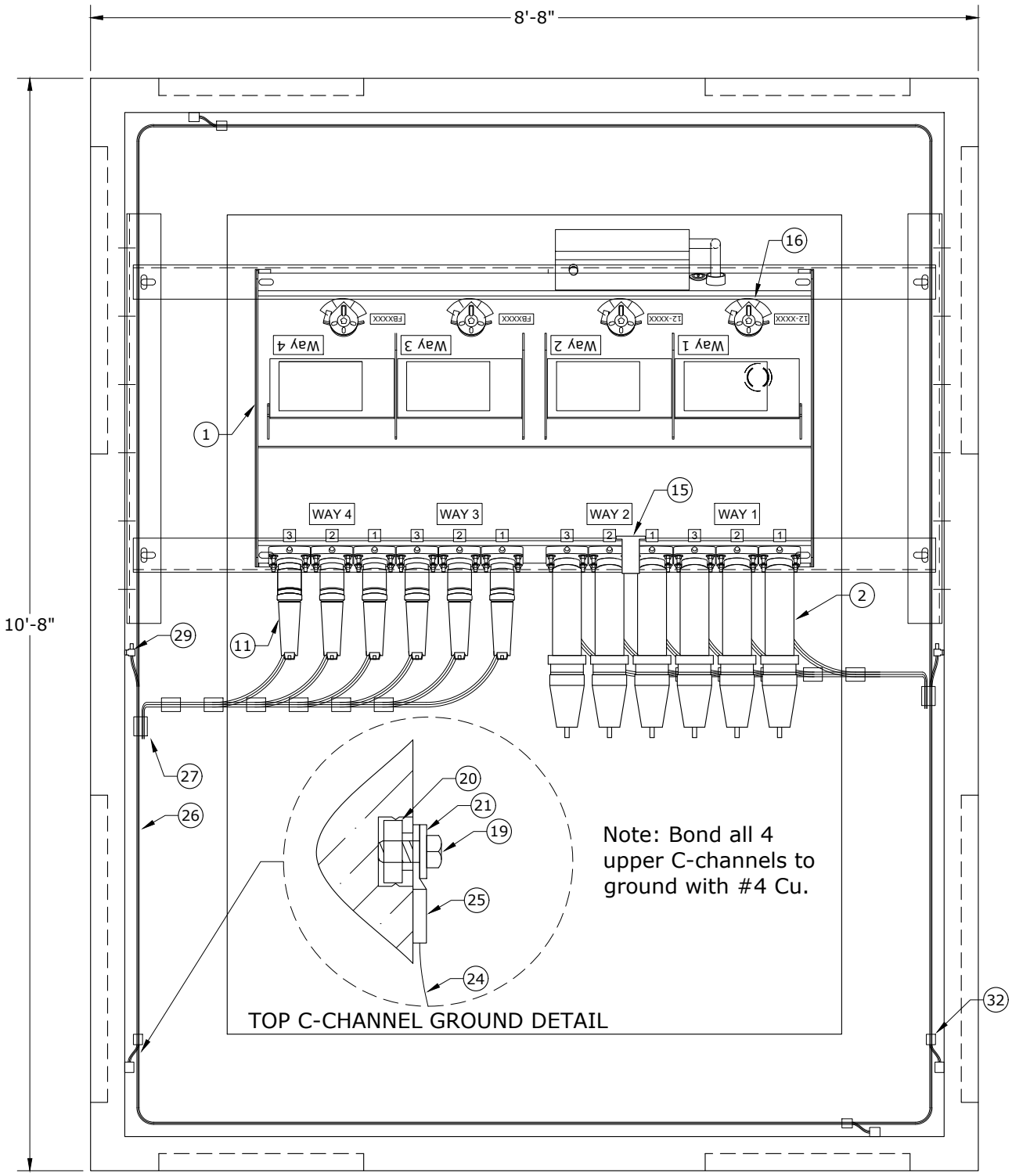

Grounding Detail Top View

Clark Public Utilities

CONSTRUCTION STANDARDS

BELOW GRADE SWITCHGEAR
VAULT DETAIL
USE WITH STANDARD USG8

REVISIONS			
R	DATE	ENGR	OPS

PAGE:		CAD FILE:	APP: CRM/GM	SECTION
1 of 7	USG9	USG9	DATE: 8/8/22	1600

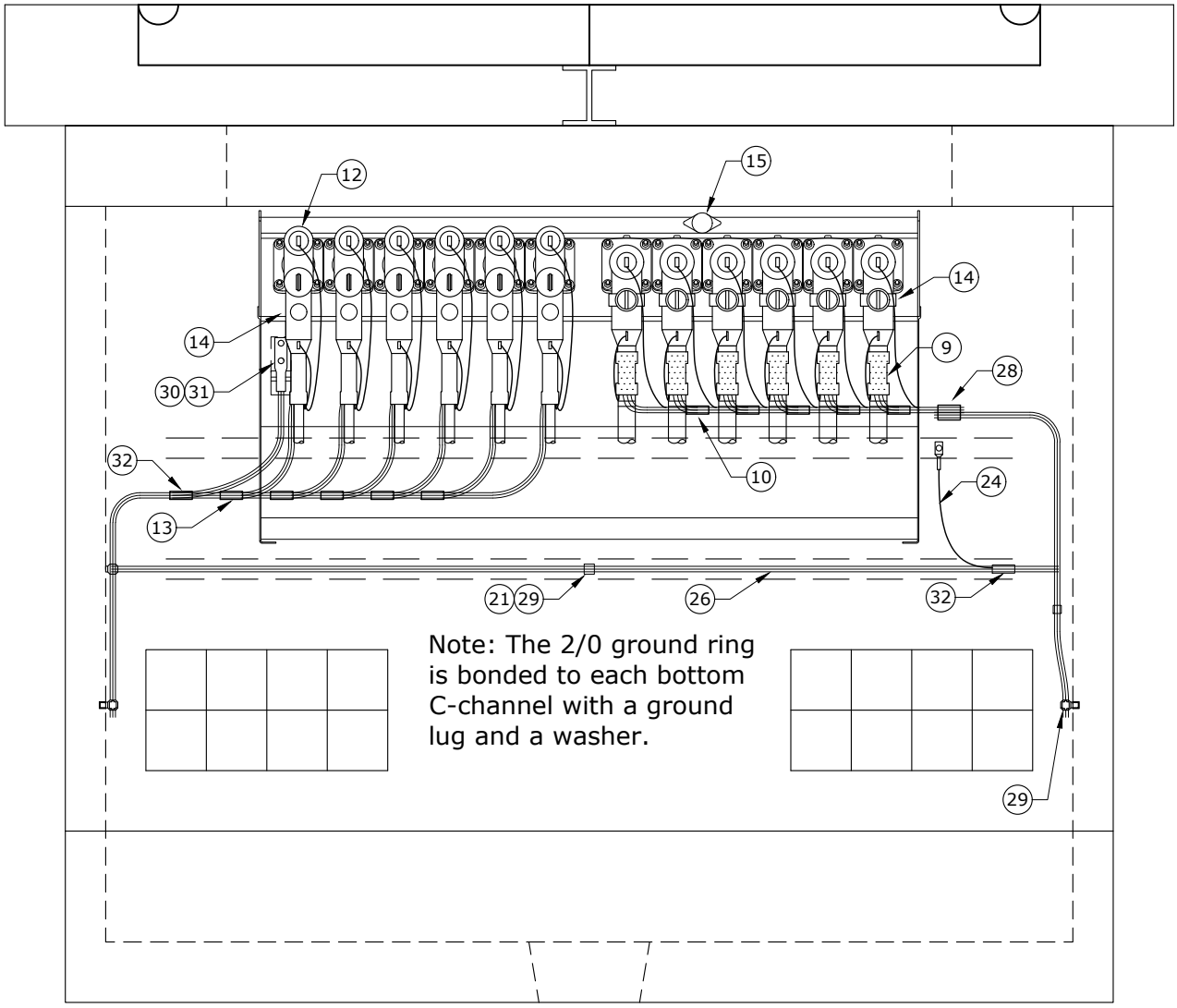

Grounding Detail Back View

Note: This drawing is for model 422. For all models, keep 200A elbow concentrics separate from 600A elbow concentrics.

Clark Public Utilities

CONSTRUCTION STANDARDS

BELOW GRADE SWITCHGEAR
VAULT DETAIL
USE WITH STANDARD USG8

REVISIONS			
R	DATE	ENGR	OPS

PAGE:		CAD FILE:	APP: CRM/GM	SECTION
2 of 7	USG9	USG9	DATE: 8/8/22	1600

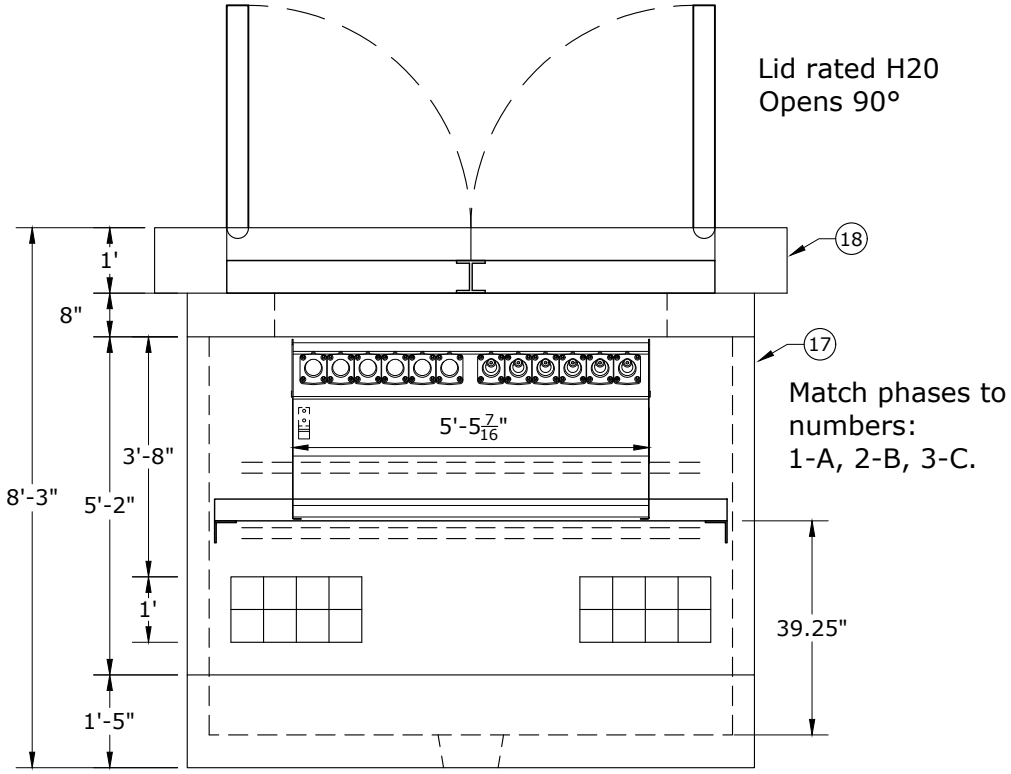

Back View

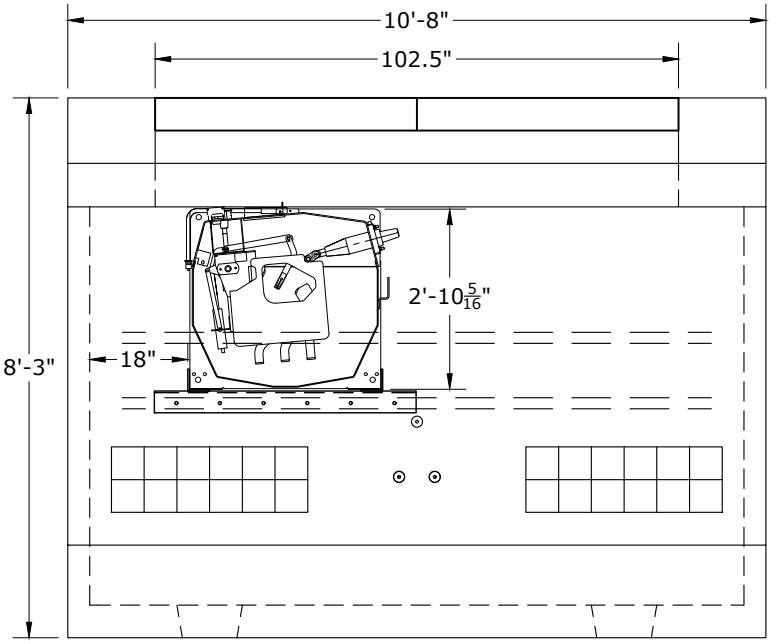

Side View

Notes:

1. Use the bottom outermost conduits first so that remaining vacant conduits are accessible for future cable pulling and orderly cable training. Seal vacant conduits with reusable expanding duct plugs (S/N 2943). Seal conduits with cable using inflatable seals (S/N 2944).
2. Install feed-thru bushings in each 200 A bushing well.

Clark Public Utilities

CONSTRUCTION STANDARDS

BELOW GRADE
VAULT DETAIL
USE WITH STANDARD USG8

REVISIONS			
R	DATE	ENGR	OPS

PAGE:		CAD FILE:	APP: CRM/GM	SECTION
3 of 7	USG9	USG9	DATE: 8/8/22	1600

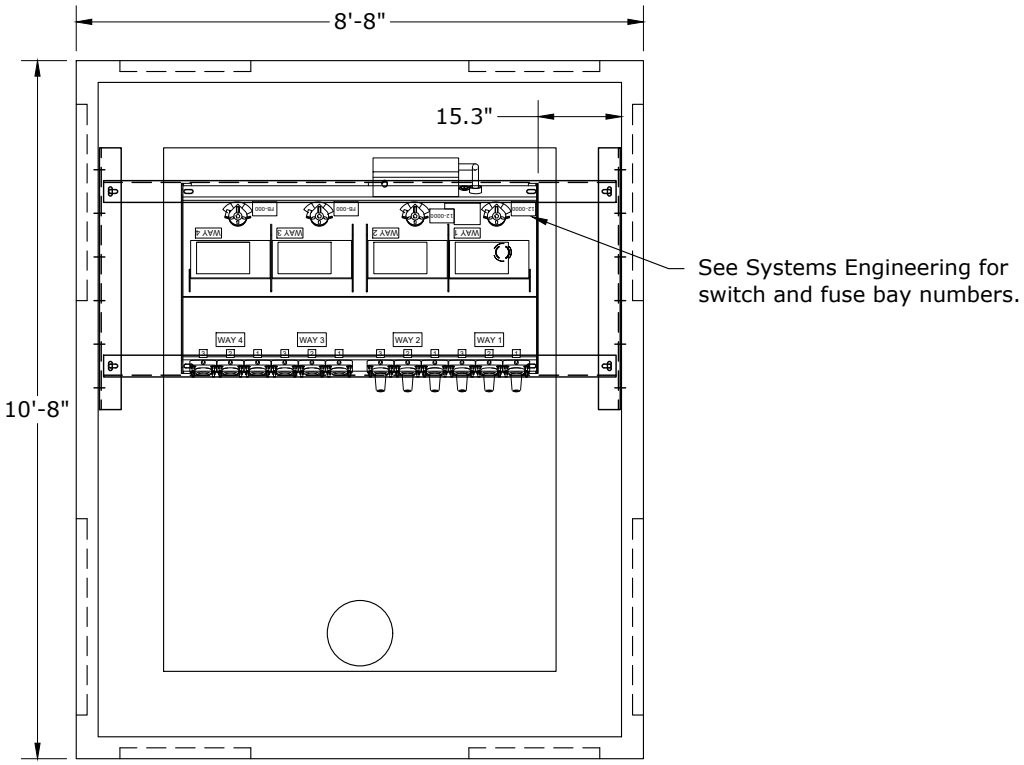

Vault Base With Switch

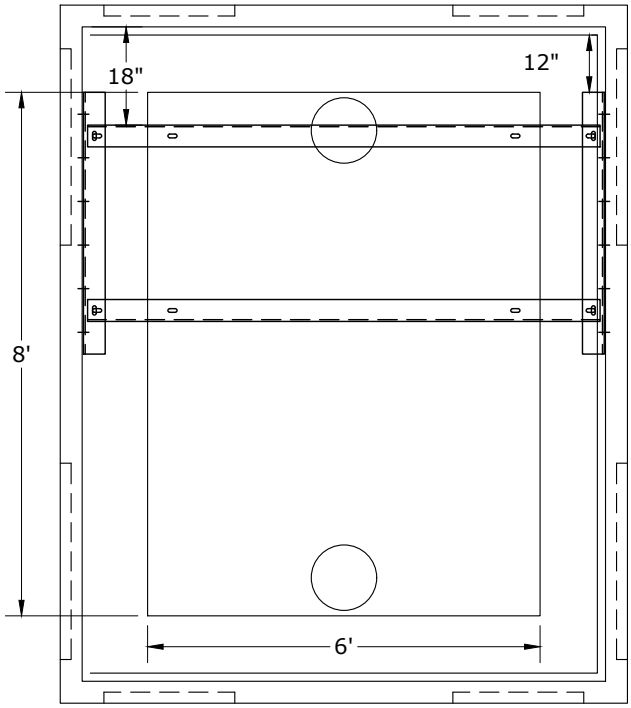

Vault Base Top View

Clark Public Utilities

CONSTRUCTION STANDARDS

BELOW GRADE SWITCHGEAR
VAULT DETAIL
USE WITH STANDARD USG8

REVISIONS			
R	DATE	ENGR	OPS

PAGE:		CAD FILE:	APP: CRM/GM	SECTION
4 of 7	USG9	USG9	DATE: 8/8/22	1600

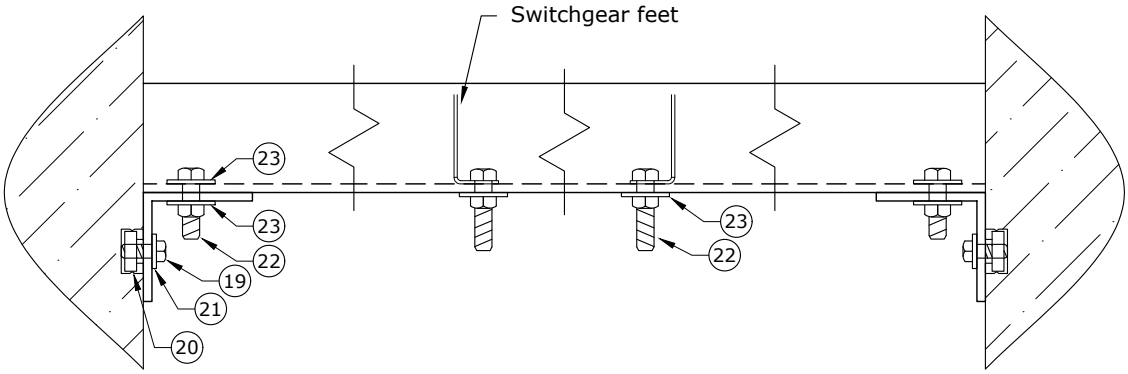

Switchgear Support Assembly

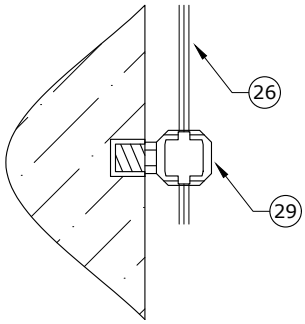

Ufer Ground Connection Detail

Clark Public Utilities

CONSTRUCTION STANDARDS

BELOW GRADE SWITCHGEAR
VAULT DETAIL
USE WITH STANDARD USG8

REVISIONS			
R	DATE	ENGR	OPS

PAGE:		CAD FILE:	APP: CRM/GM	SECTION
5 of 7	USG9	USG9	DATE: 8/8/22	1600

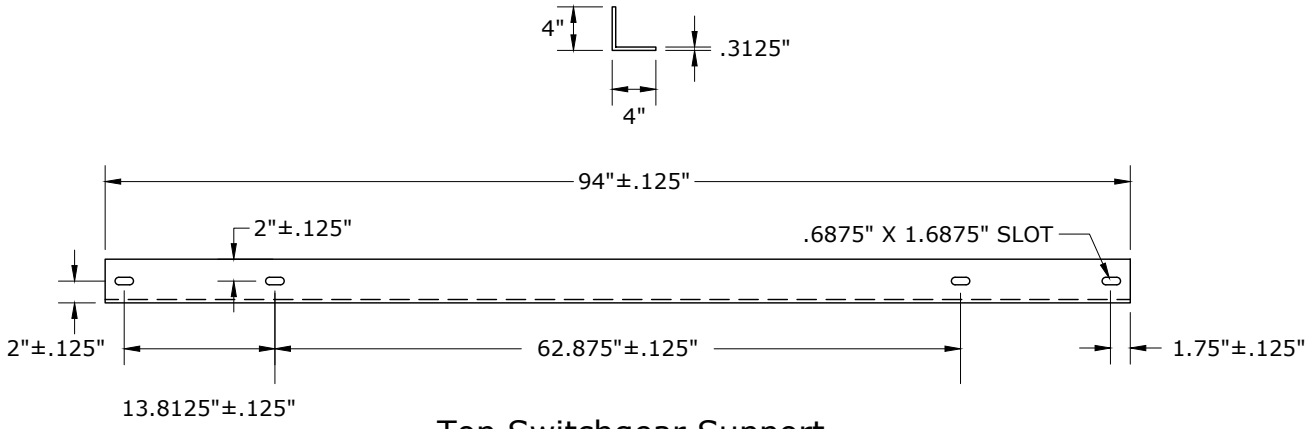

Top Switchgear Support

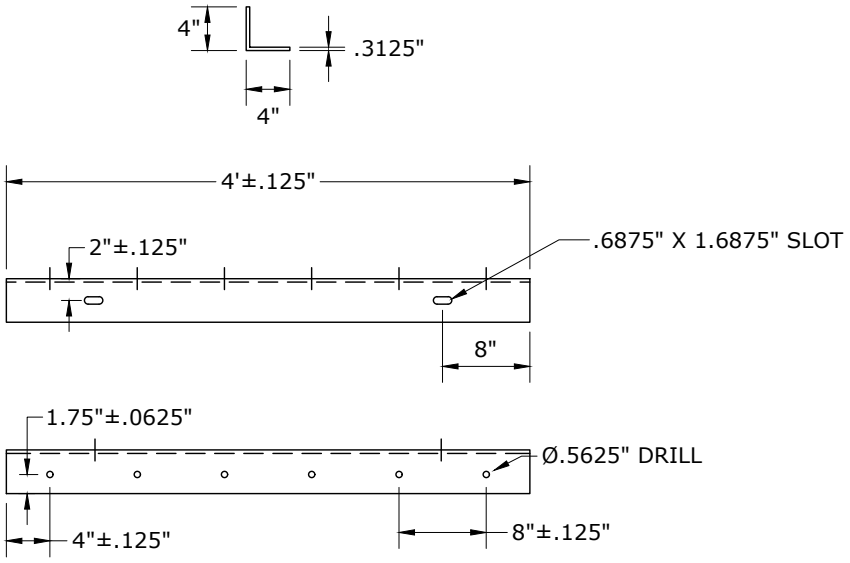

Bottom Switchgear Support

Notes:

1. These dimensions are for a Utility Vault 8'x10' with tapered walls.
2. These supports are not part of CPU inventory and must be fabricated at a machine shop.

Clark Public Utilities

CONSTRUCTION STANDARDS

BELOW GRADE SWITCHGEAR
VAULT DETAIL
USE WITH STANDARD USG8

REVISIONS			
R	DATE	ENGR	OPS

PAGE:		CAD FILE:	APP: CRM/GM	SECTION
6 of 7	USG9	USG9	DATE: 8/8/22	1600

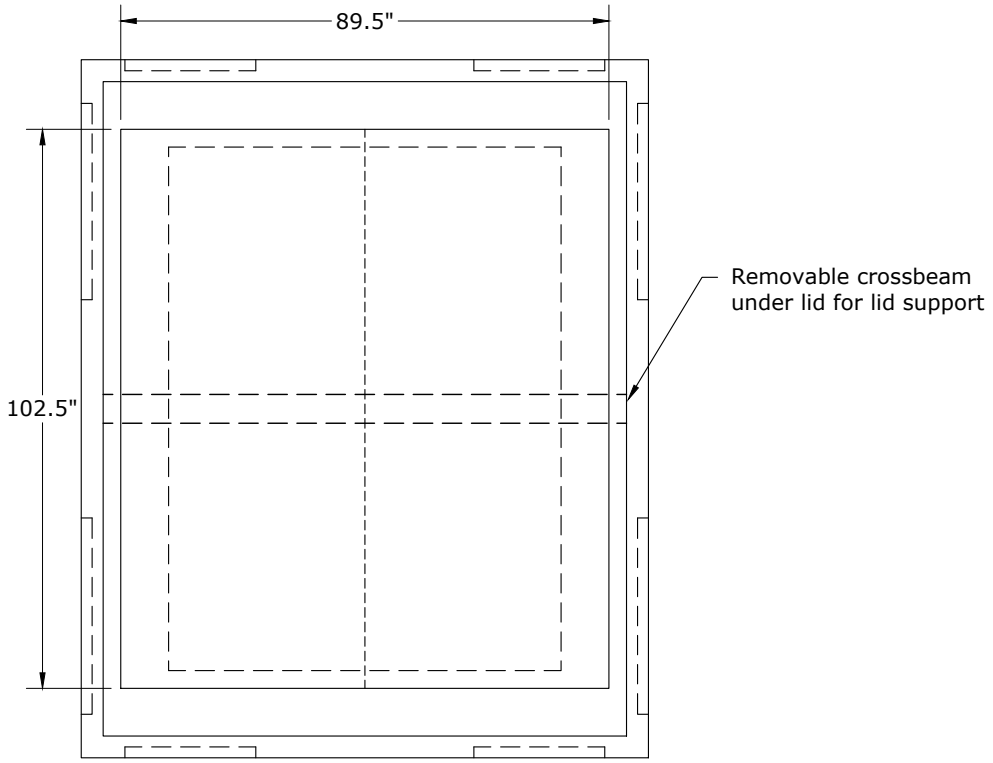

Top View With Lid

Note: See USG8 for items #1-16.

ITEM NO.	DESCRIPTION	USG9	
		QTY	S/N
17	Vault, 810. w/o Lid, Below Grade Switch	1	2793
18	Lid, (2) 3' x 8' Doors, 810 Vault, Below Grade Switch	1	2794
19	Bolt, Machine, 1/2" x 1-1/2" SS	12	131
20	Nut, Spring-Loaded Galv. 1/2"	16	920
21	Washer, Flat, 1/2", SS	20	2610
22	Bolt, Machine 5/8" x 2" Galv., 12,400 lbs Ultimate Tensile	8	149
23	Washer, Flat Round, Galv., 5/8"	16	1395
24	Conductor, OH, BSDC, #4, 1C 7 Str	35	377
25	Connector, Compression Lug, #4 Cu	8	2548
26	Conductor, OH, BSDC, 2/0, 1C 7 Str	60	379
27	Connector, Crimpet, Cu, 2/0 to 2/0	6	457
28	Connector, Crimpet, Cu, 2/0 to 4/0	1	459
29	Lug, Grounding, #8 SLD - 2/0 Str 4 Way	6	842
30	Connector, Compression Lug, Cu 2/0 Str	1	431
31	Bolt, Washer, SS, 1/2" x 2" Assembly, w/ Si Br Nut	2	1389
32	Connector, Crimpet, Cu, 1/0-2/0 to #6-#2	6	456

Clark Public Utilities

CONSTRUCTION STANDARDS

BELOW GRADE SWITCHGEAR
VAULT DETAIL
USE WITH STANDARD USG8

REVISIONS			
R	DATE	ENGR	OPS

PAGE: 7 of 7

USG9

CAD FILE: USG9

APP: CRM/GM
DATE: 8/8/22

SECTION 1600

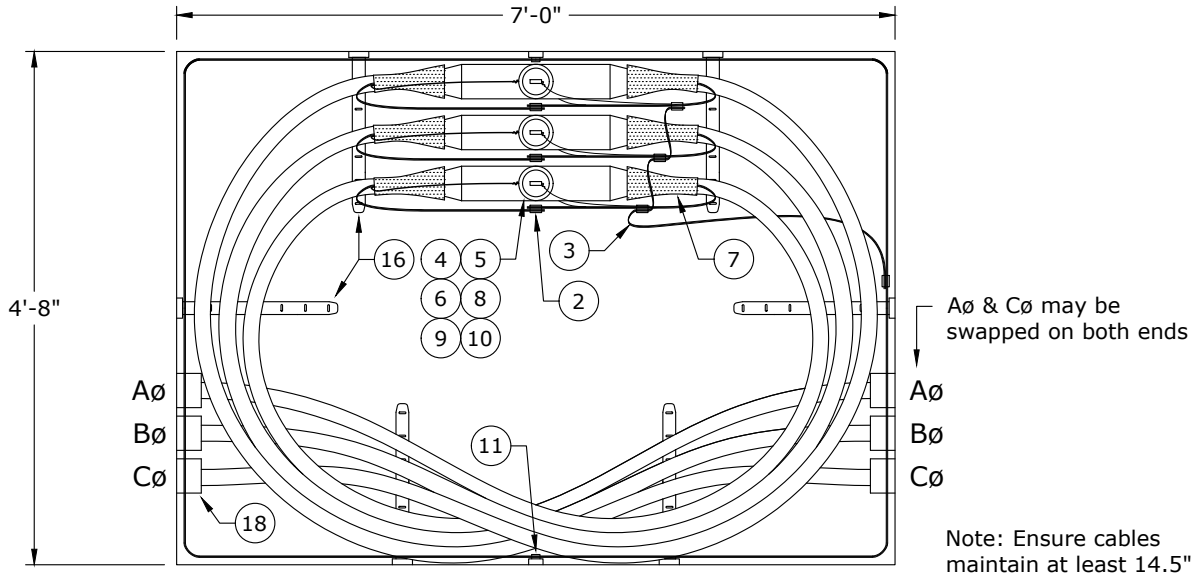

Note: CO2 cartridges for seals (#18) are in free issue.
Inflation tool is in Tool Room.

Top View

Note: Ensure cables maintain at least 14.5" minimum bend radius

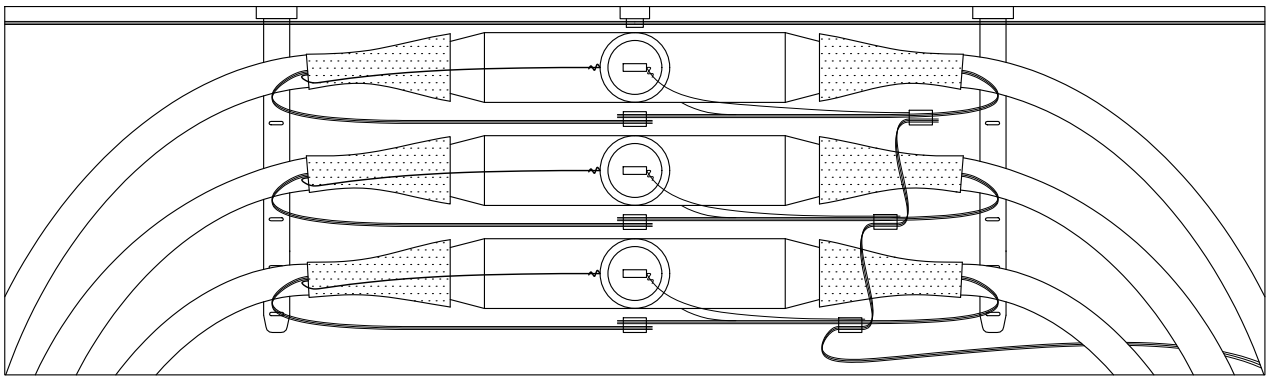

Grounding Detail

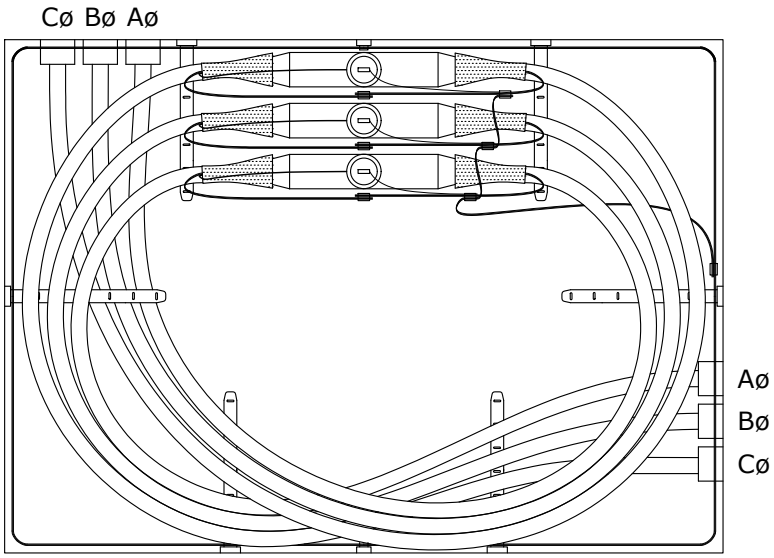

Alternate Configuration

Clark Public Utilities

CONSTRUCTION STANDARDS

1000MCM SPLICE PIT
FLUSH-MOUNT

REVISIONS			
R	DATE	ENGR	OPS

PAGE:		CAD FILE:	APP: CRM/GM	SECTION
1 of 2	USP	USP	DATE: 8/8/22	1600

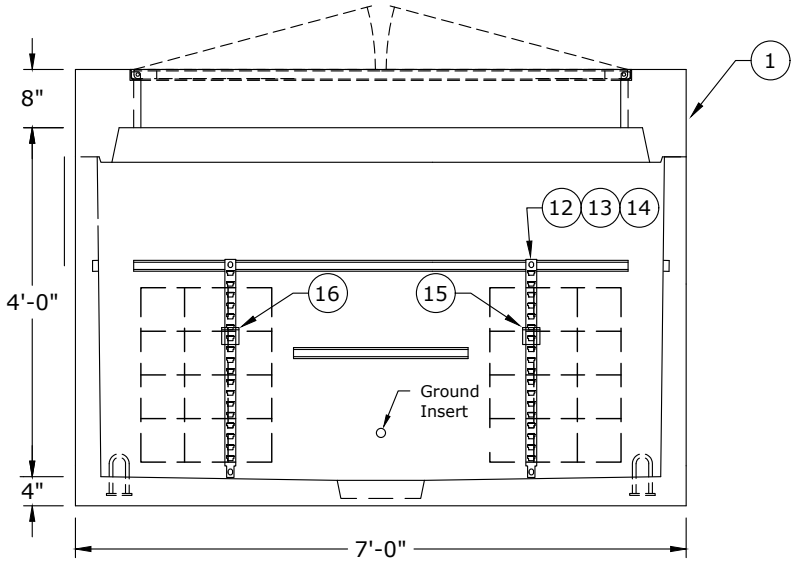

Front View (Inside)

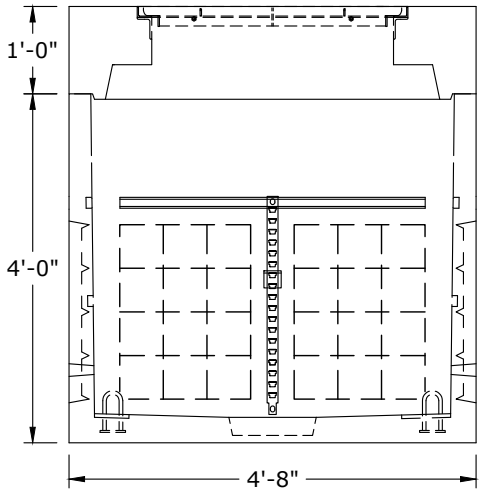

Side View (Inside)

ITEM NO.	DESCRIPTION	USP	
		QTY.	S/N
1	Vault, 575LA, Flush-Mount J-Box or EE, Ufer Ground, Non-Slip Lid	1	2722
2	Connector, Crimpet, Cu, Run & Tap 1/0 - 2/0 Str	7	457
3	Conductor, OH, Cu, 2/0, 7-str, Bare, Soft-Drawn, 1C	30	379
4	Extender, 1000MCM Cable	3	2766
5	Plug, Basic Insulating	3	1824
6	Contact, Compression, Al, 1000MCM, Non-Threaded Hole	6	941
7	Elbow, Sealing Kit, 1000MCM 175 & 220 Mil	6	2376
8	Adapter, Cable, 1000MCM	6	1
9	Plug, Loadbreak, Reducing Tap, 600A-200A	3	1769
10	Cap, Protective, Insulated, 200A	3	265
11	Lug, Grounding, #8 Sol - 2/0 Str, 4-Way	2	842
12	Bolt, Machine, 1/2" x 1-1/2" SS	6	131
13	Nut, Spring-Loaded, Galv, 1/2" (Uni-strut)	6	920
14	Washer, Flat, 1/2", 18-8, Stainless Steel	6	2610
15	Bracket, Mounting, Vault, 30"	6	2861
16	Arm, Vault, Cable, 18"	6	2863
17	Tie Wrap, Plastic, Releasable, 1/2" W x 19" L	21	2956
18	Seal, 4" Conduit, Inflatable (Up to 2 Cables)	6	2944

Clark Public Utilities

CONSTRUCTION STANDARDS

1000MCM SPLICE PIT
FLUSH-MOUNT

REVISIONS

R	DATE	ENGR	OPS

PAGE: 2 of 2

USP

CAD FILE: USP

APP: CRM/GM

DATE: 8/8/22

SECTION 1600

1610
VAULT ROOM

3/15/2010

N	COVR	Customer-Owned Vault Room Requirements

N New Standard
R Redrawn Standard
C Changed Standard
~ No Change

Scope

This standard documents requirements for customer-owned vault rooms containing equipment owned, operated, and maintained by Clark Public Utilities.

In This Standard

TOPIC	SEE PAGE
CODE REQUIREMENTS	1
VAULT ROOM AVAILABILITY	2
VAULT ROOM LOCATION	2
CIRCUIT DESIGN CRITERIA	2
VAULT ROOM GENERAL REQUIREMENTS	3
PULLING EYES	5
TRANSFORMERS	6
VIBRATION DAMPERS	8
J-BOXES	9
SWITCHES	9
CABLE AND CABLE RACKING	13
DUCT SYSTEMS	15
GROUNDING	15
SYSTEM PROTECTION	15
PERSONNEL ACCESS	16
SIGNAGE	16
FIRE DETECTION AND SUPPRESSION	18
OIL CONTAINMENT	18
VENTILATION	18
LIGHTING AND OUTLETS	20
APPROVAL DRAWINGS	20

Code Requirements

Vault rooms shall be designed and constructed so they will be considered separate buildings under IBC 705. The vault room shall meet the requirements of NEC Article 450, Part III. Raceways shall be designed and constructed so they will be considered outside the building under NEC 230.6.

Nothing in this standard shall be interpreted to conflict with the regulations of the State of Washington or other regulatory bodies that have jurisdiction.

Vault Room Availability

Clark Public Utilities' preferred design is to use padmounted equipment installed outdoors. Equipment installed in a vault room is only allowed if the customer demonstrates that an outdoor installation is physically impractical, an undue hardship, or required by a government authority.
Aesthetics alone is not adequate justification.

Approval for use of a vault room must be obtained from the Clark Design Engineer prior to submitting a vault room design for review.

Vault Room Location

All vault room locations must be reviewed and approved by the Clark Construction Design Engineer. Vault rooms should be located at grade level adjacent to the exterior wall or under the sidewalk that is closest to Clark's existing distribution system. All vault rooms must have direct access with a boom truck.

In all cases, the location shall be accessible by a door, removable wall, or ceiling to an outside location where Clark can reach the transformer, switchgear and related equipment for installation, maintenance and replacement. The customer shall provide a location where Clark crews will have 24-hour access to operate the equipment.

Circuit Design Criteria

Equipment installed in a vault room shall not serve any other buildings.

The equipment inside the vault room shall have the ability to be de-energized from outside the vault room without causing a permanent outage to other customers. The intent of this is to be able to de-energize the vault room in case of a fire or other hazardous circumstance.

Vault Room General Requirements

What is Allowed in the Vault Room

- Equipment, pipes, ducts, wires, and other fixtures allowed in a vault room shall be a necessary part of the Clark electrical installation. All items must be approved by the Clark Construction Design Engineer.
- No foreign fixtures may pass through a vault room or a cable room. This includes water or sewer pipes, or any other equipment that may require inspection or service by the customer.
- Vault rooms shall not be accessible to unqualified personnel.
- Vault rooms shall not be used as temporary or permanent storage spaces.
- All metering equipment and customer equipment, other than service conductors or bus, shall be located outside of the vault room.

Clark Public Utilities Responsibilities

- Test and energize new facilities
- Terminate primary cables in any energized facilities
- Upon energizing the facilities, Clark will assume ownership of and maintain all primary cables and conduits, transformers, junction boxes, and other primary voltage equipment.

Customer Responsibilities

- Approval for use of a vault room must be obtained from the Clark Design Engineer prior to submitting a vault room design for review.
- The customer is responsible for providing and installing all facilities.
- All materials must comply with Clark technical standards and be supplied from Clark's material list by an approved distributor.
- All Clark primary voltage facilities must be installed per Clark technical standards by a contractor on Clark's list of approved electrical contractors.

Continued on next page

The customer will provide, install, and maintain the following:

Vault Room Requirement	Customer General Responsibilities
Location, Design, Layout, and Access	• Vault room located either inside or on the exterior of the building constructed as specified in NEC 450, Section III, Transformer Vaults. • Personnel and equipment access doors. • Restricted room access to qualified utility workers only. See WAC 295-45-035. • Smooth floor surface for rolling/sliding of equipment if access for installation and removal is not directly above transformer.
Fire Detection/ Suppression	• Fire detection equipment (smoke and temperature). • Portable ABC fire extinguisher outside access door(s). • Any additional equipment or systems required by local fire officials. • Clark does not allow water fire suppression in vault rooms.
Ventilation	• Adequate ventilation for cooling of equipment.
Ground Bus	•
Oil Containment	• Ground bus for equipotential zone.
Duct and Cable Racking	• Oil containment sills, sumps, oilwater separators, drains, and valves
Lighting and Outlets	• Inserts, ducts, or knockouts in the wall for entrance and termination of ducts for primary cable, and Clark Communications cables. • Pulling inserts/hooks for installation of cables. • Racking for primary and secondary service cables.
Service Conductors	• Room lighting, emergency lighting, and convenience outlets.
Approval Drawings	• All service cables, rigid bus, and supports up to the point of interconnection.
Seismic	• Drawings for approval by Clark Public Utilities Construction Design Engineer.
Noise and Vibration	• All electrical systems, components, and elements, including supporting structures and attachments, shall be installed in accordance with the International Building Code (IBC), Section 1621.
Signage	• The vault room shall be designed so the noise and vibration from the transformer, fans, and other equipment, is not objectionable to the tenants of the building. • Customer to install "Warning" and "Danger" signs provided by Clark • Switch rooms shall be labeled w/ switch number provided by Clark • Transformer rooms shall be permanently marked w/ 2" phenolic numbers and letters (i.e. Transformer 1234-2500.)
Keys	• The customer will provide all copies of keys to Clark. • The customer will not keep copies of any keys to the vault room.

Pulling Eyes

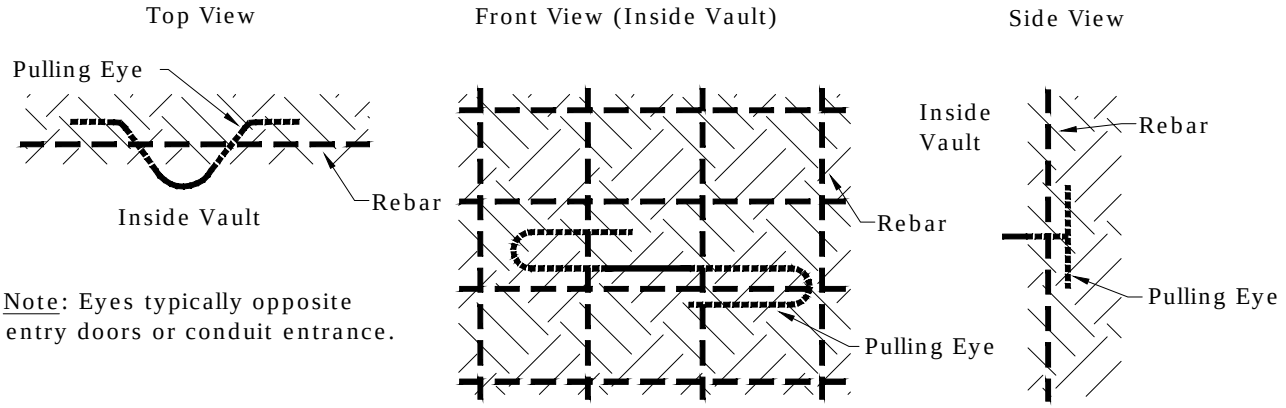

Note: Eyes typically opposite entry doors or conduit entrance.

Pulling Eyes Shown Embedded in Concrete Vault Walls Behind Reinforcing Steel

Pulling eyes are required in Clark's vaults. Pulling eye number, location, and height shall be determined and approved by the Clark Construction Design Engineer. The location of pulling eyes should be chosen to facilitate moving electrical equipment, including cable, to be located in or removed from the vault.

Minimally, but without duplication, pulling eyes for rigging equipment shall be installed as follows:

- opposite the entry door (one);
- adjacent to the entry door (one);
- centered on each wall without a center door;
- opposite each conduit entrance at approximately the same height (one);
- adjacent to one side of each conduit entrance (one);
- for vaults with ceiling hatches for transformer installation and removal, pulling eyes should be installed adjacent to the hatches (two); and
- similarly, for conduits entering through the ceiling or the floor, pulling eyes should be installed adjacent and opposite the conduit entrances (two).

Locations for pulling eyes can vary depending on the vault plan and configuration (entry door, conduit entrance, hatch, and transformer locations). Clark prefers that pulling eyes on walls shall be at a height of 26 inches from the floor although for conduit entrances, the height of the pulling irons should approximately match the height of the conduits. If the vault is constructed of concrete blocks, eyes may be floor-mounted.

Pulling eyes shall be installed with the following requirements:

- Pulling eyes shall be made of stainless steel.
- Pulling eye installation shall be rated and labeled in the vault as 10,000 pounds pulling strength.
- Install pulling eyes behind concrete reinforcing rebar steel (Note: spacing and size of rebar to be determined by a licensed civil engineer.).

Transformers

Dimensions and Clearances

Vault rooms shall be a minimum of 24' x 20'. The minimum equipment entry door size shall be 10' x 10'. The minimum ceiling height shall be 12'. Minimum clearances for transformers are 10 feet in front, 3 feet sides and back, and 5 feet above. See Figures 1 and 2.

Insulating Fluid

All vault room transformers shall be filled with natural ester fluids.

Installing and Removing

If the vault room is at grade level adjacent to an exterior wall, the vault room will have a 10' x 10' equipment door on the exterior wall so the transformer can be moved by a boom truck.

If the vault room is in the sidewalk, the vault room can be open on top to the outside air and have a minimum 12-foot by 12-foot clear opening obtained by removing an access hatch.

- The opening or hatch and transformer must be in a location on the property where it is accessible by lift equipment that is owned by Clark or its normal utility contractor.
- The hatch must be equipped with Clark's standard lifting inserts or the customer shall provide any non-standard lifting devices for use with the rigging of a mobile crane.
- The access hatch may be one piece or in sections.
- No portion of the hatch shall weigh more than 15,000 pounds.
- A personnel access door shall be provided.

Note: The customer is responsible for removal and replacement of any seals or coverings in preparation for installation or removal of equipment.

Equipment Door

If equipment shall be installed and removed through a wall, the minimum access door required is 10 feet wide by 10 feet high.

Variance

If the preferred method for installation and removal are not met, the customer must get a written variance from the Clark Construction Design Engineer.

Multiple Transformers

If multiple transformers are required to serve a facility, they will be required to be placed in separate rooms to keep an equipment failure of one transformer from damaging or preventing access to the other equipment.

2000 to 2500kVA Transformers

These transformers require a S&C Vista switch, whether inside or outside the building, for system protection.

Service Conductors

The number of available secondary transformer connections is 8 conductors per phase. If more are needed, contact the Clark Design Engineer.

Continued on next page

Figure 1: Transformer vault room (top view)

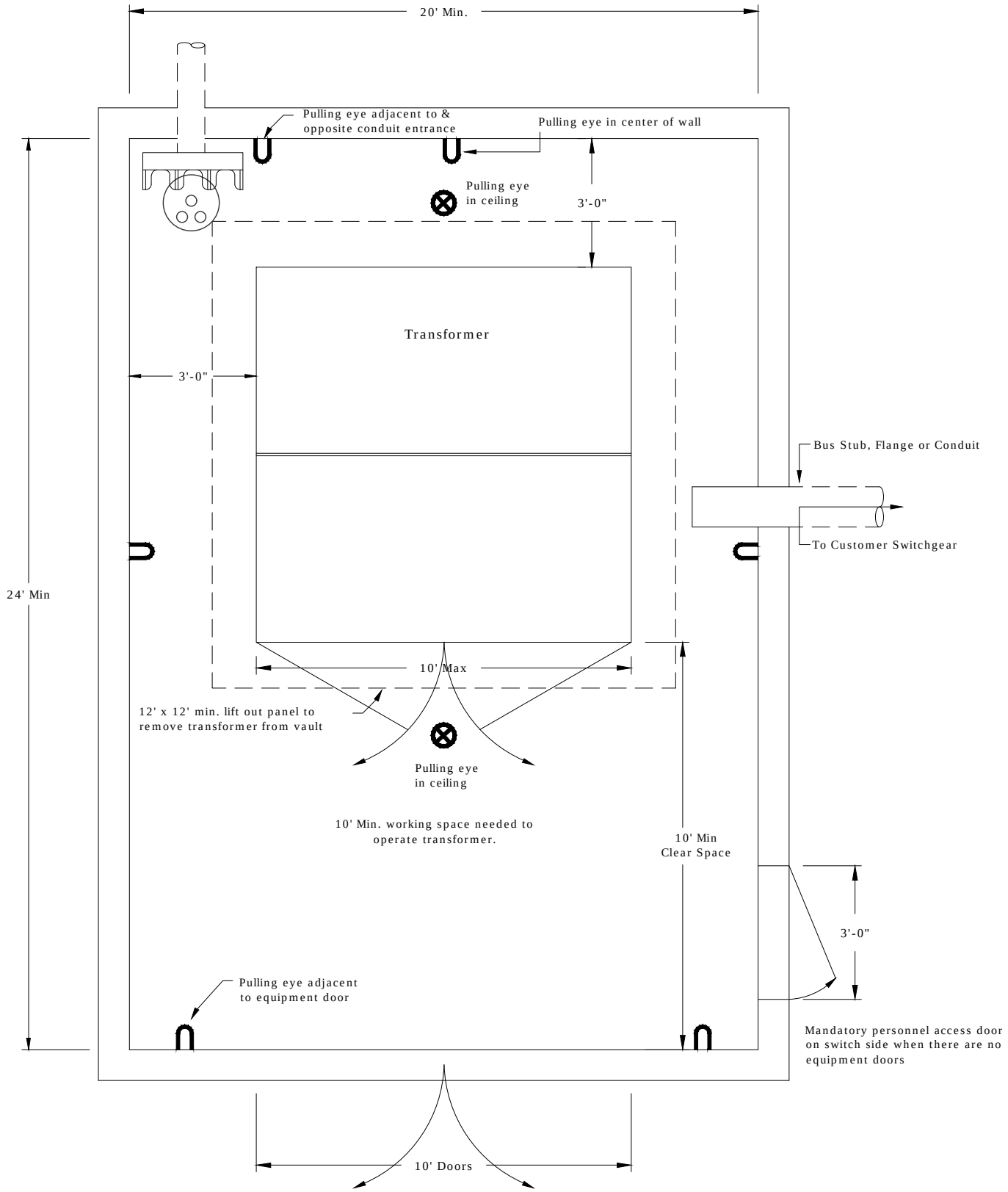

Continued on next page

Figure 2: Transformer vault room (side view)

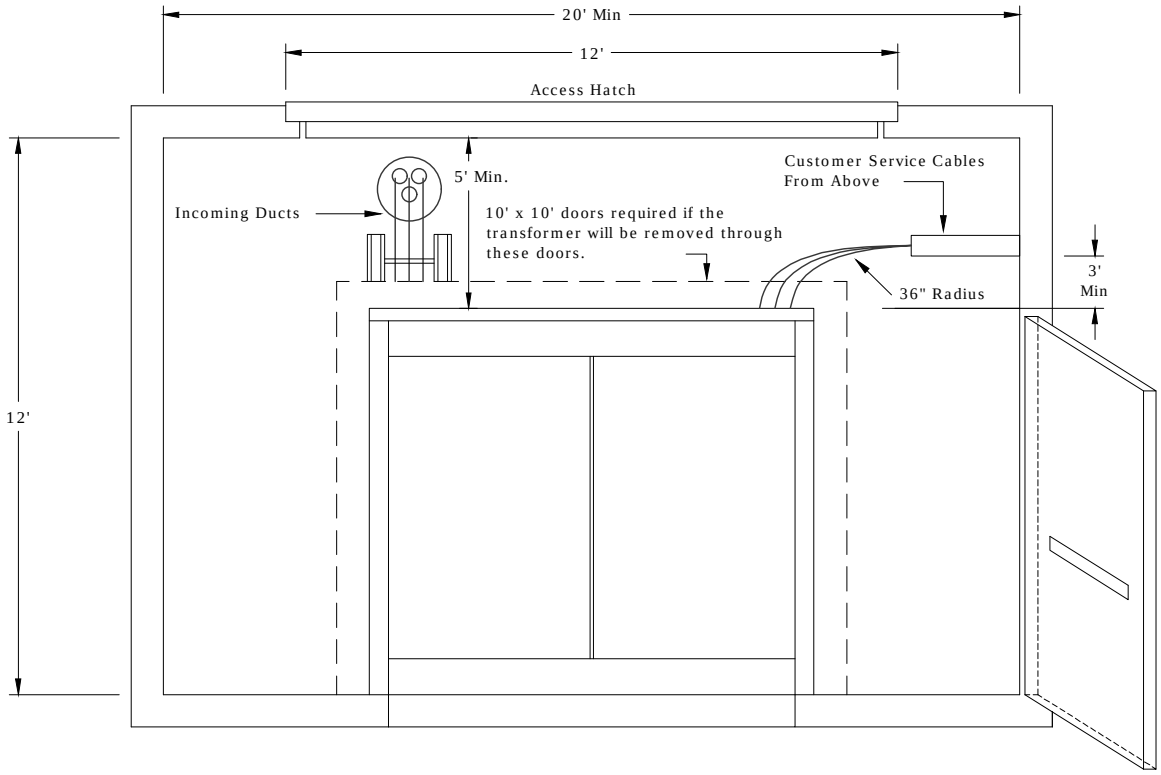

Vibration Dampers

Transformers installed in customer-owned vaults must be placed on vibration dampening pads to isolate the building from transformer vibrations and noise.

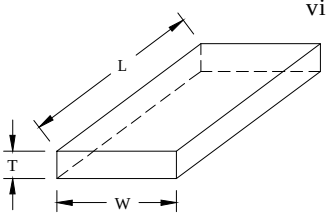

W	L	T	DESCRIPTION
4"	8"	1/2"	Pad, Vibration Dampening
4"	60"	2"	Tubing, Rectangular Steel, 1/8" Wall, Hot-Dipped Galvanized

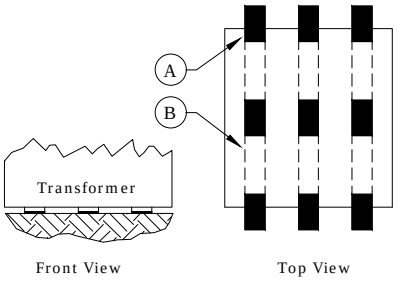

XFMR WT.	ITEM	DESCRIPTION	QTY	
6,400lb.	A	Pad, Vibration Dampening 4"x8"x1/2"	4	
	B	Tubing, Rectangular Steel 4"x2"x60"	2	
9,600lb.	A	Pad, Vibration Dampening 4"x8"x1/2"	6	
	B	Tubing, Rectangular Steel 4"x2"x60"	3	
17,000lb.	A	Pad, Vibration Dampening 4"x8"x1/2"	9	
	B	Tubing, Rectangular Steel 4"x2"x60"	3	

J-Boxes

When space is not available for the normal exterior junction vault, junction bushings may be installed on a wall in a separate vault room. Use of interior junction bushings should be avoided whenever possible to reduce access times during emergency conditions.

If junction boxes are installed in a vault room, the space must be designed to accommodate the following:

- The junction bushings shall be mounted 36 inches above the floor
- The cables shall be racked on the wall and not laid on the floor. The cables shall be secured to the racking. The racking shall be supplied and installed by the customer. The racking must be approved by Clark's Standards Engineer.
- The portions of the cables close to the elbow shall be free to move and not be trapped under other cables.
- There shall be enough slack to easily move the elbows from the junction bushings to the stand-off brackets. The cable shall not come out of the floor directly below the junction bushings because this does not provide adequate slack.
- The cables may approach the racking from above, or below, or a combination.
- A 10-foot by 10-foot working space shall be provided in front of the junction bushings.

Switches

The preferred design when switches are required to serve a new customer is to have them set outside the building and above ground (padmounted). If they cannot be located outside of the building, they must be placed in a vault room separate from the transformer. The switches required for vault rooms are the S&C "Vista" switch.

Transformers greater than 1500kVA will require a S&C "Vista" switch, whether inside or outside the building, for system protection.

Room Dimensions and Clearances

Vault rooms for switches shall be a minimum of 24' x 15'. The minimum ceiling height shall be 12'. Vault rooms shall provide a minimum working space of 10 feet deep and 8 feet wide from the control panel side of the switch, and 3 feet on the sides. The minimum equipment entry door side shall be 10' x 10'.

The room shall be a minimum of 8 feet from the floor to the cable racks above. See Figures 3 and 4.

Continued on next page

Installing and Removing the Switch

The preferred method of installing and removing the switch is by a boom truck. The door shall be 10' x 10'. The vault room can be open on top to the outside or have a minimum 10' x 10' opening for a S&C "Vista" switch obtained by removing an access.

- The opening or hatch and switch must be in a location on the property where it is accessible by lift equipment that is owned by Clark or its normal utility contractor.
- The hatch must be equipped with Clark's standard lifting inserts or the customer shall provide any non-standard lifting devices for use with the rigging of a mobile crane.
- The entire access hatch, if one piece, or each section, must weigh 15,000 pounds or less.

Note: The customer is responsible for removal and replacement of any seals or coverings in preparation for installation or removal of equipment.

Equipment Door

If equipment shall be installed and removed through a wall, the minimum access door required is 10 feet wide by 10 feet high.

Multiple Switches

If multiple switches are required to serve a facility, they will be placed in separate rooms to keep an equipment failure from damaging or limiting access to the other equipment.

Continued on next page

Figure 3: Vista Switch Vault Room (Top View)

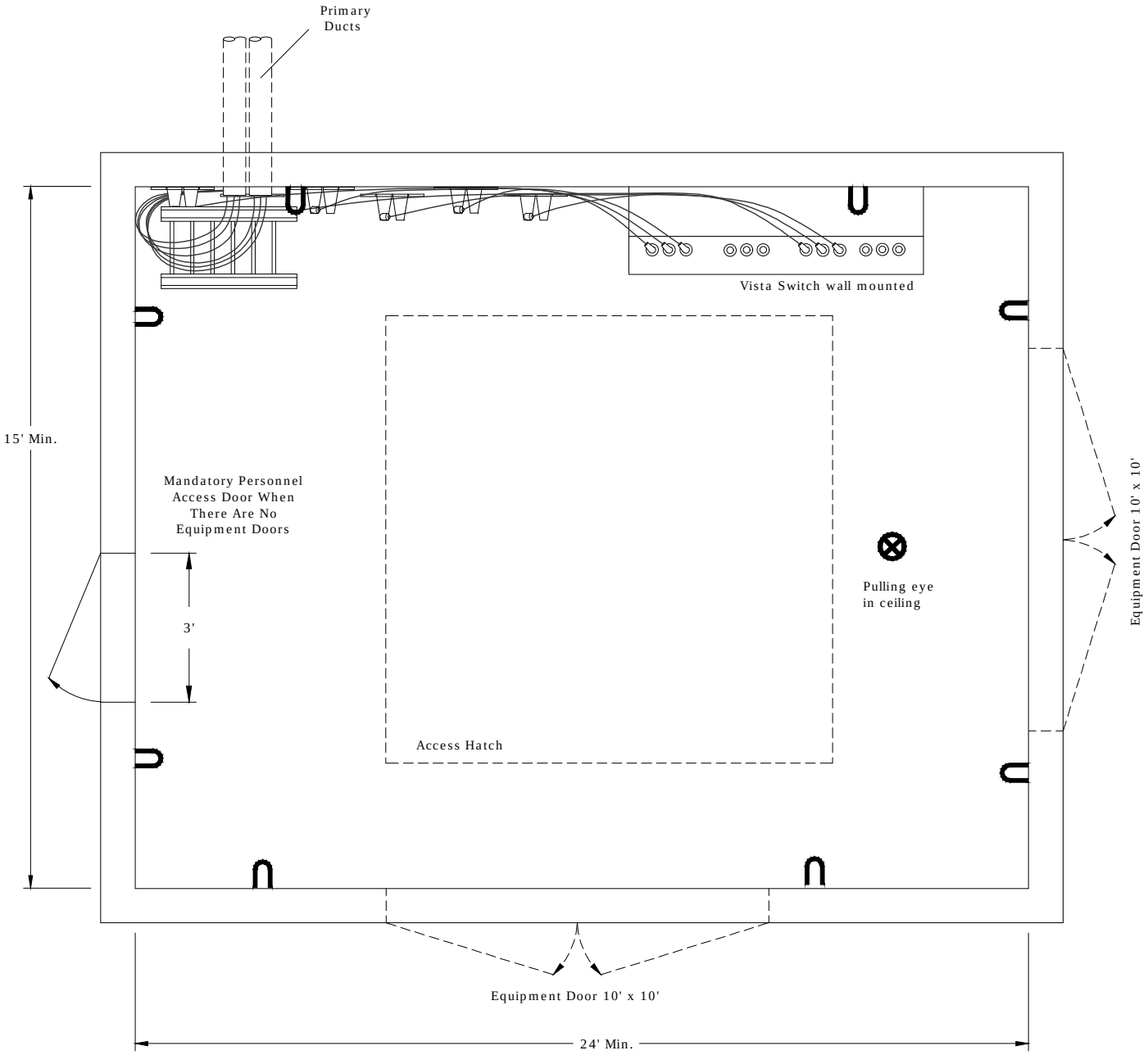

Continued on next page

Figure 4: Vista Switch Vault Room (Side View)

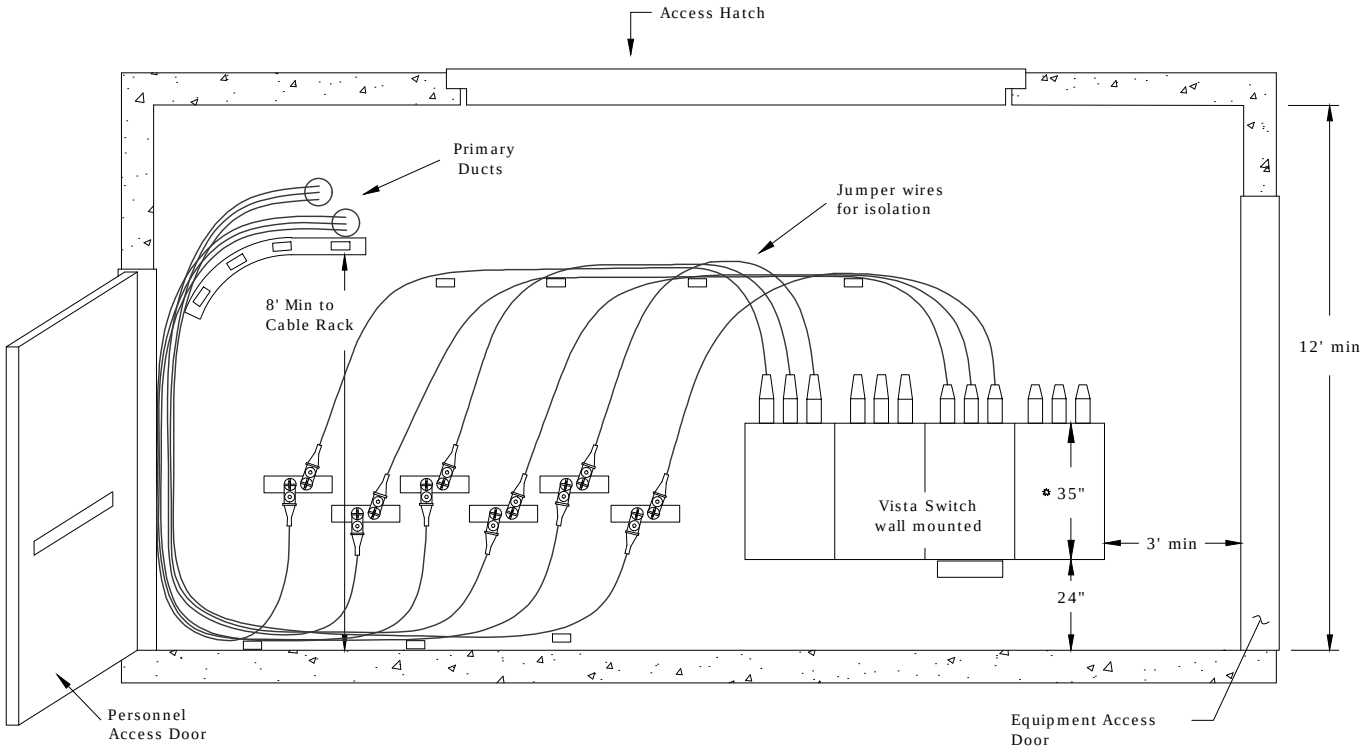

✲ Tank is 35" wide. Anchor brackets are 37" apart.

Clark Public Utilities

CONSTRUCTION STANDARDS

CUSTOMER-OWNED VAULT ROOM REQUIREMENTS
COVR

REVISIONS			
R	DATE	ENGR	OPS

PAGE:		CAD FILE:	APP: CM/AH	SECTION
12 of 20	COVR	COVR	DATE: 2/1/10	1610

Cable and Cable Racking

Responsibilities

Customer's Responsibilities	Clark's Responsibilities
Furnish, install, and maintain the service cables.	Maintain the primary voltage cables.
Furnish all conduit and racking inside the building required to bring the primary and service conductors to the switchgear and/or transformer.	
Furnish and install the primary 1/0 cables.	Furnish and install the primary 1000MCM cables.
Terminate 1/0 cable	Terminate 1000MCM cable

Cable Bending Radius

The minimum bending radius of any primary or secondary cable shall not be less than 36 inches.

Clearance

Space shall be provided for entry and training of the primary and secondary cables.

Service Conductors

The service cables must be completely supported to keep the weight of the cables from damaging the transformer secondary bushings.

The customer supplies the service conductors to the secondary lugs of the transformer and terminates.

The number of available secondary transformer connections is 8 conductors per phase.

Conduits opening to the building interior shall be firestopped. To ensure oil containment, secondary conduits shall be installed a minimum of 24 inches above the vault floor. Figure 5 shows a typical detail for encasing ducts entering through the vault floor.

Continued on next page

Figure 5: Encasing Ducts For Oil Containment

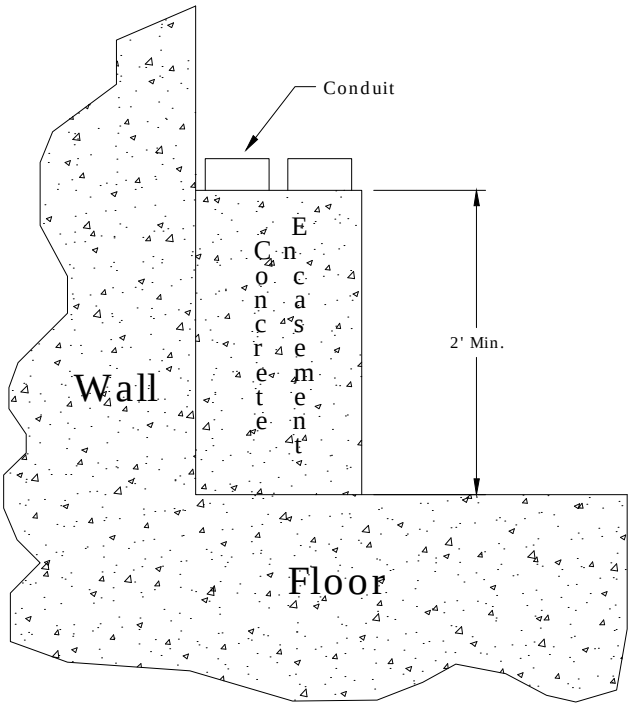

Duct Systems

Responsibilities

Customer's Responsibility	Clark's Responsibility
• Provide a primary duct system from the vault room(s) to a location outside the facility as specified by Clark. • Provide raceways for Clark conductors that meet the requirements of NEC 230.6. • Sealing the exterior of all ducts or inserts for ducts where they penetrate through the outside of the building or vault rooms. • Firestop all conduits leaving the vault room except 1000MCM conduits.	• Design the duct system to be used by specifying the type, size, location, and number of conduits • Firestop all 1000MCM conduits leaving the vault room

Grounding

The customer is responsible for installing a ground bus along the back wall of the vault room.

- The ground bus will be a 4/0 copper conductor.
- The ground bus will be located 1 foot above the floor and must not cross any access doors.
- The ground bus shall be tied to the building's grounding electrode system and building reinforcing structure to create an equal potential zone in the vault room. This requires inspection by Clark prior to pouring concrete.
- The ground bus shall be tapped to each piece of equipment (not daisy-chained), so the ground wire to one piece of equipment can be cut without leaving other pieces of equipment ungrounded.

System Protection

Clark will provide overcurrent protection for the primary side of the transformer but does not provide any protection on the secondary side of the transformer for the customer's service cables.

Personnel Access Door to Transformers and Switches

A direct and unobstructed rescue/escape route through a personnel access door shall be provided from every working space where an operator will stand when he/she operates a switch in or on a sealed piece of equipment (a S&C "Vista" switch or a 200-amp elbow on a piece of equipment). The personnel access door allows 24-hour access to the vault room from outside the building. The access shall meet NESC Section 113.

- Doors shall be designed for Clark's Substation lock cores or have a Vinter Changeable Hasp installed to accept a Clark padlock with a 3/8-inch shank.

  Personnel access doors can be a standard size (3' x 6'8" min).

- All standard-size access doors into the vault room shall open outward and shall be equipped with panic bars, pressure plates or other devices that are normally latched but open under simple pressure.

  Equipment access doors (hinged or roll-up) must be a minimum of 10 feet wide.

- Bollards may be required to protect access to the vault room.

Signage

All vault rooms shall have "Warning" signs on the outside of all access doors and "Danger" signs on the inside of all access doors in accordance with ANSI Z535. Clark will provide the signs to the customer. The customer is responsible for installing them at a height of 5' to the top of the sign from the floor.

The customer will provide and install 2" phenolic numbers and letters 3" below the "Warning" sign with the name of the equipment and the equipment number. Clark will provide the switch number label. See Figures 6 and 7.

If a roll-up door is used for equipment access, the "Warning" signs, "Danger" signs, and phenolic letters and numbers can be placed on the concrete wall on the side of the door at the same heights. Placards will be used instead of adhesive signs.

Continued on next page

Figure 6: Outside of Access Doors to Vault Room

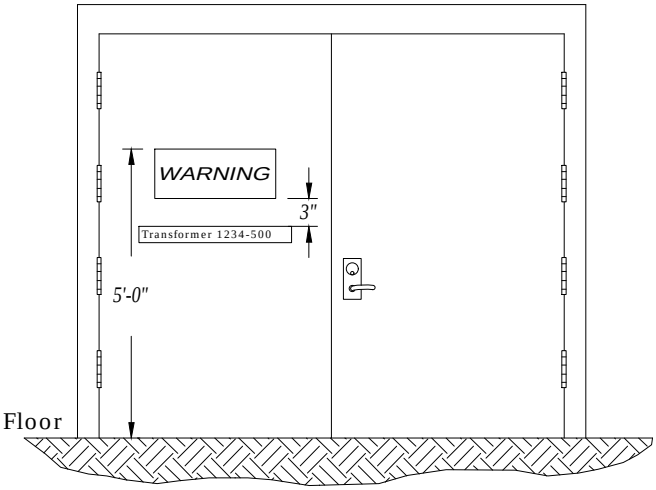

Transformer Vault Room

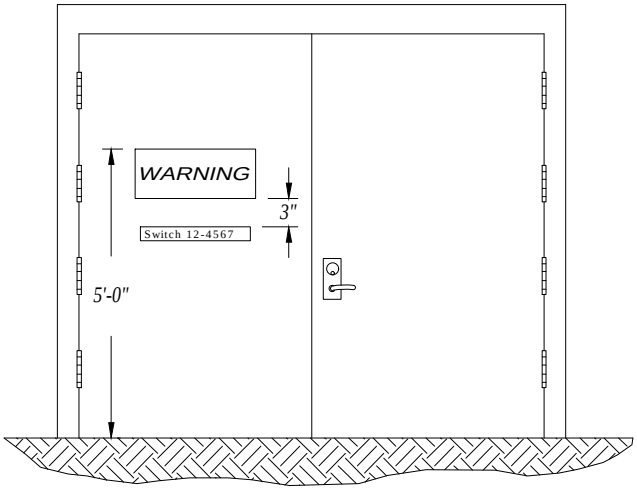

Switch Vault Room

Figure 7: Inside of Access Doors to Vault Room

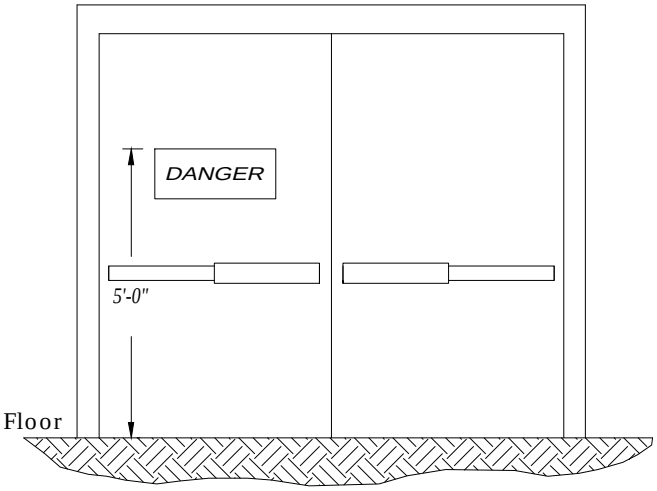

Fire Detection and Suppression

Requirements for Customer-owned Vault Rooms

The vault room shall be built to meet the NEC 450 Section III and the IBC 705. A portable ABC-rated fire extinguisher shall be located outside each personnel access door. The customer is responsible for keeping the fire extinguisher up to date.

Fire detection equipment (smoke and temperature) shall be located where they can be tested and maintained without climbing over or on top of transformers or switches.

Water Sprinkler Systems in Vault Rooms

Electrical fires and oil fires are not easily controlled by sprinklers. Water sprayed on burning oil can cause frothing and boilover. If the capacity of the containment system is exceeded, flaming oil can overflow and expand the scope of a fire. For these reasons, Clark does not recommend water sprinkler systems in vault rooms.

If the local fire department requires a sprinkler system in the room, a containment system shall be installed that is sized to adequately handle the water volume of the room's sprinkler system, plus the volume of oil of the transformer.

Oil Containment

The transformer vault room shall include an oil containment system that can store 500 gallons of oil.

Floor drains are not allowed in Clark's vault rooms. Removable or breakable sills may be required at each access door.

Ventilation

Natural Circulation

The preferred method of ventilation is natural circulation to the outside air. The minimum net clear area required for natural ventilation is 3 square inches for each kVA of transformer capacity (see Table 3). Only the area of the opening shall be included in this calculation and not the area occupied by a screen or grating if present. All the ventilation area may be in the ceiling or along the walls, but not within 2' of the floor.

Continued on next page

Forced-Air

If natural ventilation to the outside air is not available, forced ventilation will be provided. The minimum cubic feet per minute (c.f.m.) of airflow will be 1.6 times the transformer capacity in kVA (shown in Table 3). Forced ventilation will be controlled by a thermostat set to come on at 86 degrees Fahrenheit and turn off at 140 degrees Fahrenheit. If the room temperature exceeds 140 degrees Fahrenheit, an alarm shall sound in the building management system. All ventilation openings to the inside of the building will be supplied with automatically closing fire dampers. All ventilation openings will be to the outside of the building to prevent smoke damage.

Airflow Factor Formula

The c.f.m. airflow factor of 1.6 times the kVA was obtained using the following formula:

$$Q = \frac{(3.16 \times WL)}{(t_i - t_0)}$$

Where: Q = Rate of air transfer in c.f.m.
WL= Transformer full load loss in watts
t_i = Maximum allowable temperature in vault or 140°F (40°C)
t_o = Incoming ambient air temperature or 86°F (30°C)

Table 3

Minimum net clear opening required for natural ventilation or c.f.m. for forced ventilation

	Natural Ventilation		Forced Ventilation
Transformer (kVA)	(Sq Ft)	(Sq In)	(C.F.M.)
300	6.25	900	480
500	10.41	1500	800
750	15.63	2250	1200
1000	20.82	3000	1600
1500	31.23	4500	2400
2000*	41.64	6000	3200
2500*	52.05	7500	4000

* Require S&C "Vista" switch for system protection.

Lighting and Outlets

These are the requirements for lighting and outlets in vault rooms:

- All four sides of the equipment shall be illuminated.
- Vault room lighting shall be provided at a rate of 3 watts per square foot of floor space.
- The light switch shall be located inside the vault room next to the personnel access doorway.
- Emergency lighting shall be provided as specified in the NEC-700, Emergency Systems.
- A 120-volt duplex convenience receptacle shall be provided on two opposite walls of the vault.
- The customer shall provide an additional convenience outlet to power a communication enclosure required by Clark Public Utilities for supervisory and data acquisition controls for switch rooms.
- All branch lighting and outlet circuits serving the vault room shall be tied to the facility's emergency generator panel.

Approval Drawings

The customer shall be responsible for providing detailed construction drawings, for Clark Public Utilities' approval, outlining:

- The dimensions, layout, and location within the building of vault rooms, given in both plan and profile
- Load bearing capabilities of all areas subject to equipment loads
- Access doors
- Oil containment
- Ventilation
- Lighting and outlets
- Knockouts or inserts for Clark's ducts entering the vault
- Grounding system.
- Fire detection system and fire extinguisher location.
- Fire rating of vault room walls, floor, ceiling and doors/hatches
- Equipment removal plan if not by boom truck through an exterior door or through an opening or access hatch directly over the equipment.
- Customer's secondary bus system and supports
- Support system for primary cable runs

Responsibilities

Customer Design Responsibilities	Clark's Design Responsibilities
Shall provide the vault room drawings during the preliminary design stage of the project.	Shall review and approve vault room design drawings in a timely fashion.

1700
UNDERGROUND SECONDARY

2/11/2025

~	UB30-UB60	Basic Units - Underground Secondary
~	UE18,UE38	Secondary J-Box 17" x 30" x 18" Deep (Light Duty) Secondary J-Box 24” x 36” x 18”
C	UED6	Secondary Pedestal Assembly
~	US-1	UG Secondary Splice
~	US6,US7	Padmount Transformer Assembly 1Ø Secondary
~	US35-US38	Secondary Connectors 3Ø Padmount Transformer

N New Standard
R Redrawn Standard
C Changed Standard
~ No Change

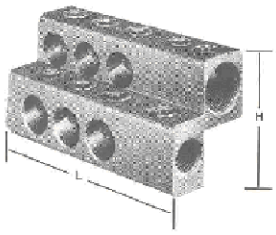

Single Phase Padmount Transformer Terminal

UB30's Material Descriptions	TDM #	Const. Spec.
Connector PTL 4-250 UG Al/Cu 6 to 4/0	1439	UB30
Connector PTL 4-350 UG Al/Cu 6 to 350	539	UB31
Connector PTL 6-250 UG Al/Cu 6 to 4/0	540	UB32
Connector PTL 6-350 UG Al/Cu 6 to 350	541	UB33
Connector PTL 6-500 UG Al/Cu 2 to 500	542	UB34

Three Phase Padmount Transformer Terminal

See US35 through US40 for Three Phase Padmount Transformer Terminals

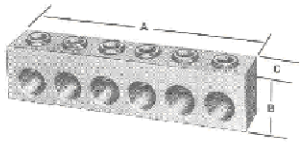

Pedestal and Junction Box Connector

UB50's Material Descriptions	TDM #	Const. Spec.
Connector PTL 4-250 UG Al/Cu 6 to 4/0	527	UB50
Connector PTL 4-350 UG Al/Cu 6 to 350	528	UB51
Connector PTL 4-500 UG Al/Cu 2 to 500	529	UB52
Connector PTL 6-250 UG Al/Cu 6 to 4/0	530	UB53
Connector PTL 6-350 UG Al/Cu 6 to 350	531	UB54
Connector PTL 6-500 UG Al/Cu 2 to 500	532	UB55
Connector PTL 6-750 UG Al/Cu 350 to 750	533	UB56
Connector PTL 8-500 UG Al/Cu 2 to 500	534	UB57
Connector PTL 8-750 UG Al/Cu 2 to 750	535	UB58

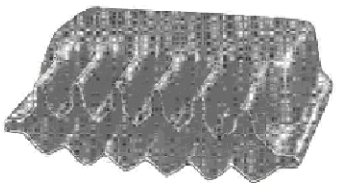

PTL, PET, PED Cover

UB60's Material Descriptions	TDM #	Const. Spec.
Cover, Connector 4-350 UG	573	UB60
Cover, Connector 6-500 UG	574	UB61
Cover, Connector 8-500 UG	575	UB62
Cover, Connector 8-750 UG	576	UB63

1700 Underground Secondary

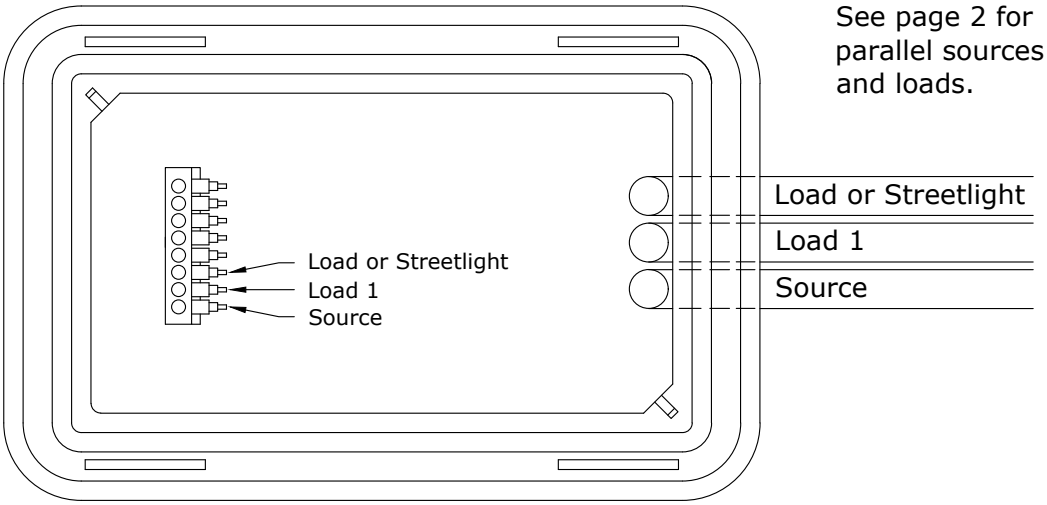

See page 2 for parallel sources and loads.

Top View

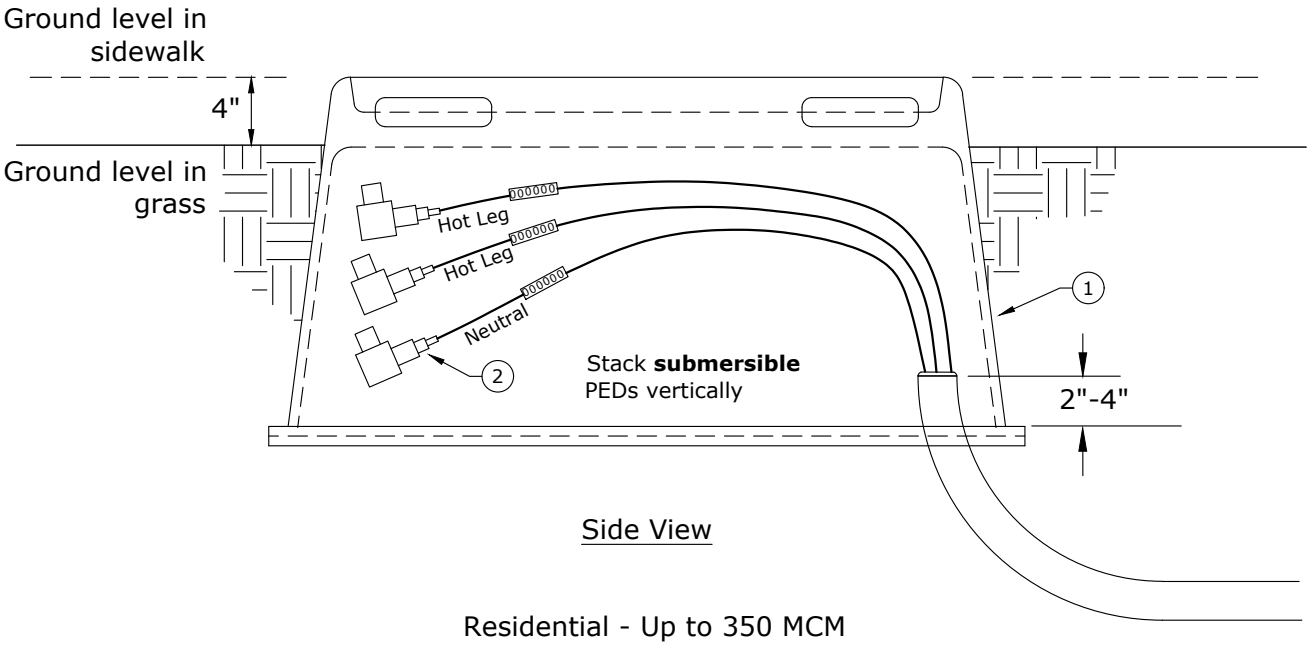

Side View

Residential - Up to 350 MCM
Commercial - Up to 500 MCM

Notes:

1. Do not install S/N 2556 in streets, alleys, or highways.
2. Cut all cables long enough to allow makeup to be done above the box top with cables in an approximately vertical position.
3. Bend cables down after makeup so that lid can be installed.
4. Use silicone grease on all allen wrench plugs and cable boots (both ends).
5. If additional depth is needed, place one box upside down, bolt the 2 boxes together and salvage one lid. (S/N 2556 only).

Rev. 7 - Added drawing for parallel source and loads.

Clark Public Utilities

CONSTRUCTION STANDARDS

SECONDARY JUNCTION BOX
17" x 30" x 18" DEEP (LIGHT DUTY)
24" x 36" x 18" DEEP (HEAVY DUTY)

REVISIONS

R	DATE	ENGR	OPS
4	10/29/18	KJP	
5	6/24/19	JDK	
6	12/2/19	KJP	
7	12/9/22	CRM	GM

PAGE:		CAD FILE:	APP: GGW/RWG	SECTION
1 of 2	UE18,UE38	UE18	DATE: 4/92	1700

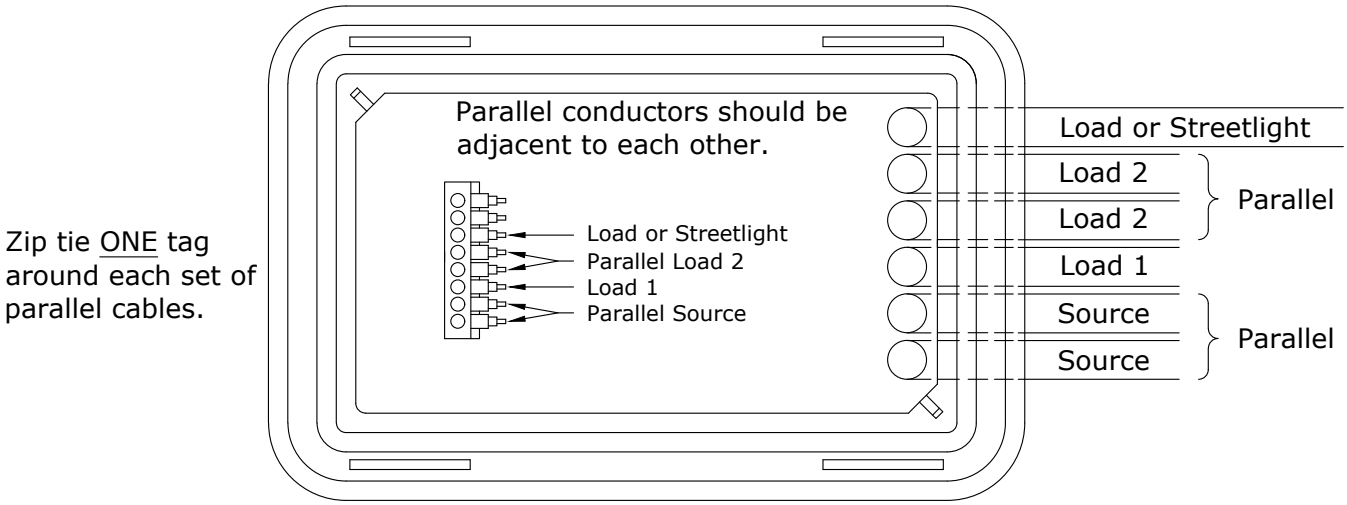

Top View
Parallel Source and Loads

Occasional Traffic Areas (S/N 2556):

- Rated 10,000 pounds
- This box is NOT for use in streets, alley or highways. Do NOT use in driveways if location is part of the normal traveled way

Heavier Traffic Areas (S/N 2608):

- Rated 20,000 pounds
- This box is 24" x 36" x 18"
- May be used in alleys or driveways-only rated 20k
- Do NOT use in streets or highways

Rev. 7 - Added drawing for parallel source and loads.

ITEM NO	DESCRIPTION	UE18	
		QTY	S/N
1	Box, Junction, Secondary, Composite, Light Duty (10k lb) with Cover, 17" x 30" x 18" with Pentabolts	1	2556
2	Connector, Submersible, Sec., 8 Position, #12 to 500 MCM Al/Cu	3	2264

ITEM NO	DESCRIPTION	UE18H	
		QTY	S/N
1	Box, Junction, Secondary, Composite, Heavy Duty (20k lb) with Cover, 24" x 36" x 18" with Pentabolts	1	2608
2	Connector, Submersible, Sec., 8 Position, #12 to 500 MCM Al/Cu	3	2264

ITEM NO	DESCRIPTION	UE38	
		QTY	S/N
1	Box, Junction, Secondary, Composite, Light Duty (10k lb) with Cover, 17" x 30" x 18" with Pentabolts	1	2556
2	Connector, Submersible, Sec., 8 Position, #12 to 500 MCM Al/Cu	4	2264

ITEM NO	DESCRIPTION	UE38H	
		QTY	S/N
1	Box, Junction, Secondary, Composite, Heavy Duty (20k lb) with Cover, 24" x 36" x 18" with Pentabolts	1	2608
2	Connector, Submersible, Sec., 8 Position, #12 to 500 MCM Al/Cu	4	2264

Clark Public Utilities

CONSTRUCTION STANDARDS

SECONDARY JUNCTION BOX
17" x 30" x 18" DEEP (LIGHT DUTY)
24" x 36" x 18" DEEP (HEAVY DUTY)

REVISIONS

R	DATE	ENGR	OPS
4	10/29/18	KJP	
5	6/24/19	JDK	
6	12/2/19	KJP	
7	12/9/22	CRM	GM

PAGE: 2 of 2

UE18,UE38

CAD FILE: UE18

APP: GGW/RWG
DATE: 4/92

SECTION 1700

FRONT VIEW

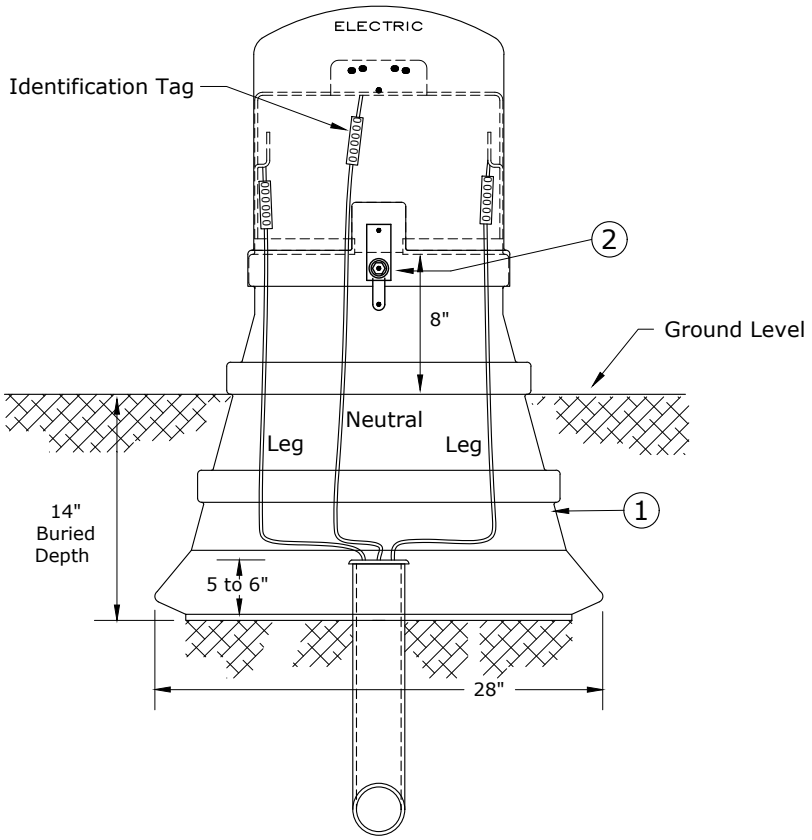

SIDE VIEW

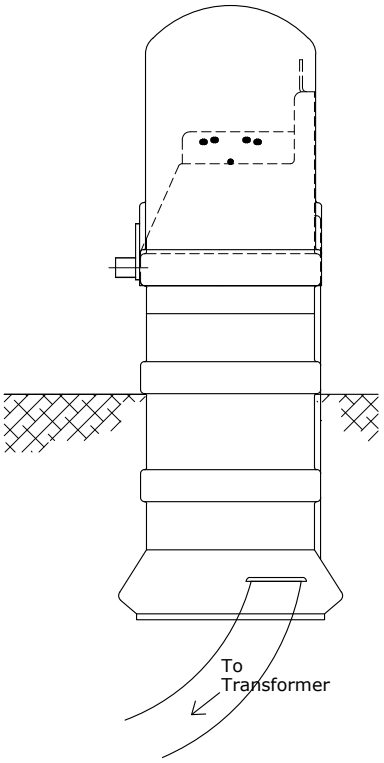

Notes: 1.) Leave slack in wire to allow for settling.
2.) Recommended torque for connectors: 23-38 ft-lb

Must maintain 3' clearance from CPU equipment to Communication equipment.

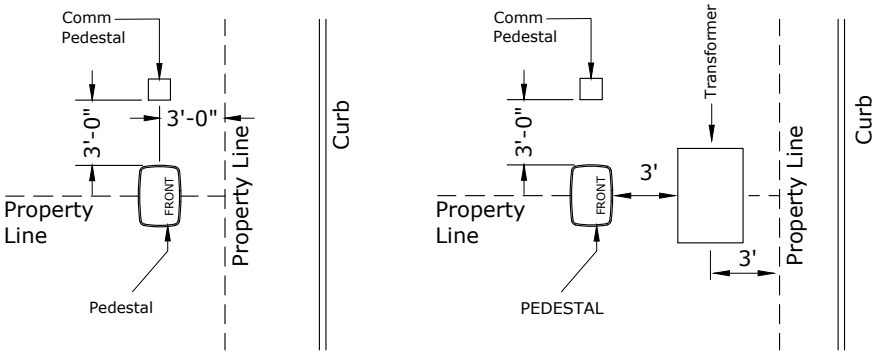

LOCATION IN SUBDIVISION

FOR 480V SERVICE

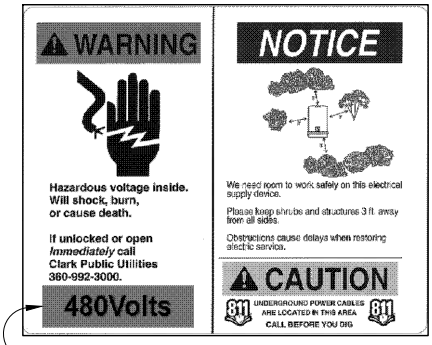

Add S/N 794 "480 VOLTS" Label to "WARNING" label when pedestal is used for 480 V service.

Rev. 4 - Removed ground rod for BDR.

Clark Public Utilities

CONSTRUCTION STANDARDS

SECONDARY PEDESTAL ASSEMBLY

REVISIONS

R	DATE	ENGR	OPS
1	4/26/04	LB	AH
2	3/12/20	KJP	
3	12/9/22	CRM	GM
4	2/11/25	CM	GM

PAGE:		CAD FILE:	APP: HWH/ELM	SECTION
1 of 3	UED6	xUED6	DATE: 1980	1700

DO NOT Cut Zip Ties off Plastic PED Covers
Zip Ties MUST Be Reinstalled

Back of Pedestal

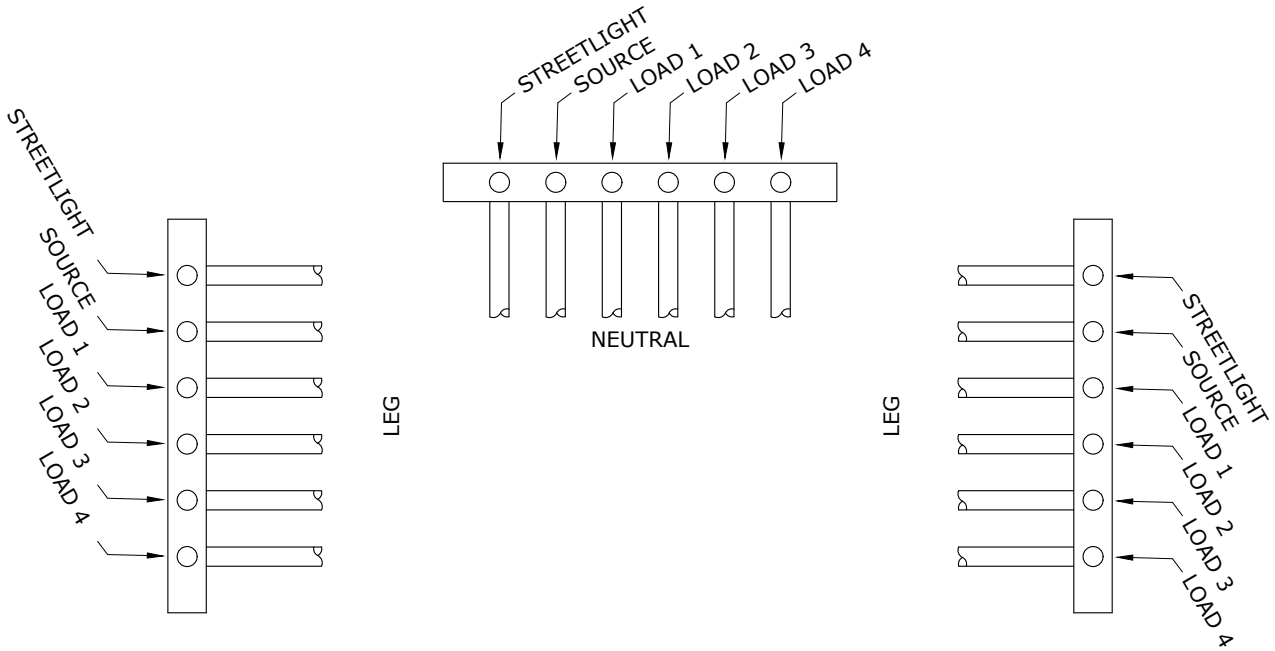

Top View

Recommended torque: 23-38 ft-lb
Do NOT Use Impact Driver/Wrench

Notes: 1.) Maximum cable size is 350 MCM.
2.) Minimum cable size is #10.
3.) Maximum of 6 triplex cables.

Rev. 4 - Removed ground rod for BDR.

ITEM NO	DESCRIPTION	UED6 QTY	UED6 S/N
1	Pedestal, Secondary, Above Ground, W/ Connectors and Covers *	1	2562
2	Lock, Equipment *	1	837

Clark Public Utilities

CONSTRUCTION STANDARDS

SECONDARY PEDESTAL ASSEMBLY

REVISIONS

R	DATE	ENGR	OPS
1	4/26/04	LB	AH
2	3/12/20	KJP	
3	12/9/22	CRM	GM
4	2/11/25	CM	GM

PAGE: 2 of 3

UED6

CAD FILE: UED6

APP: HWH/ELM

DATE: 1980

SECTION 1700

DO NOT Cut Zip Ties off Plastic PED Covers
Zip Ties MUST Be Reinstalled

Zip tie ONE tag around each set of parallel cables

Back of Pedestal

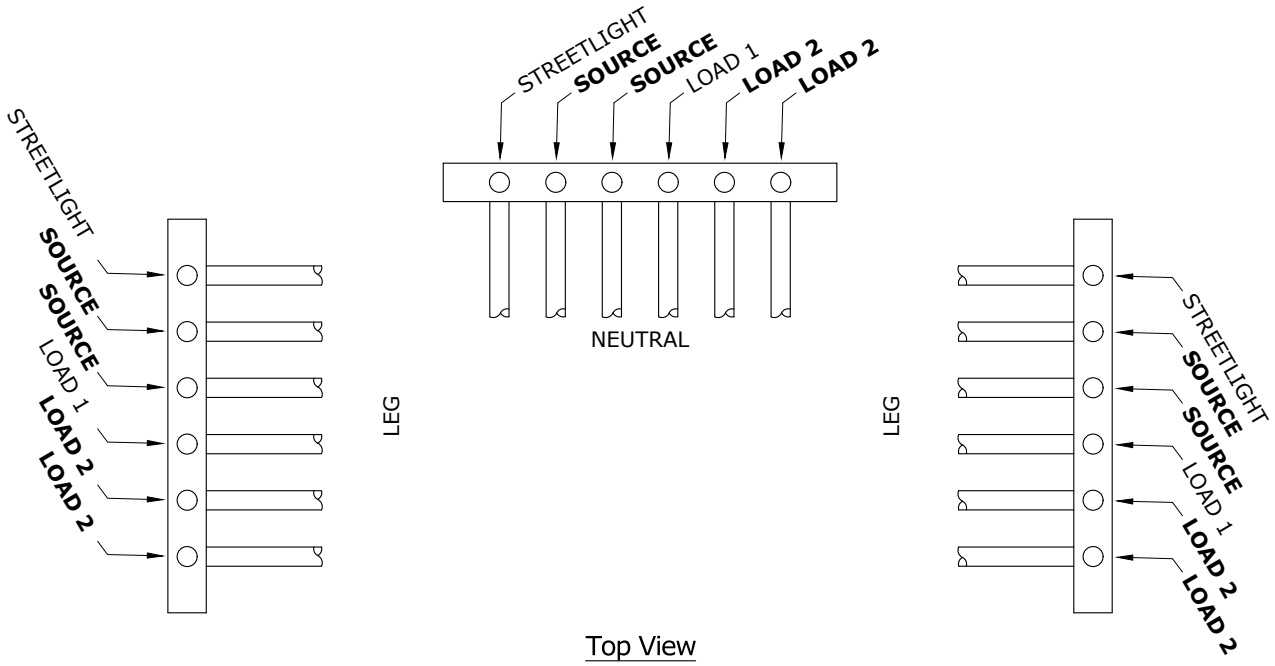

Top View
Parallel Source and Loads

Recommended torque: 23-38 ft-lb
Do NOT Use Impact Driver/Wrench

Notes: 1.) Maximum cable size is 350 MCM.
2.) Minimum cable size is #10.
3.) Maximum of 6 triplex cables.

Rev. 4 - Removed ground rod for BDR.

ITEM NO	DESCRIPTION	UED6 QTY	UED6 S/N
1	Pedestal, Secondary, Above Ground, W/ Connectors and Covers *	1	2562
2	Lock, Equipment *	1	837

Clark Public Utilities

CONSTRUCTION STANDARDS

SECONDARY PEDESTAL ASSEMBLY
PARALLEL SOURCE AND LOADS

REVISIONS

R	DATE	ENGR	OPS
1	4/26/04	LB	AH
2	3/12/20	KJP	
3	12/9/22	CRM	GM
4	2/11/25	CM	GM

PAGE: 3 of 3

UED6

CAD FILE: UED6

APP: HWH/ELM
DATE: 1980

SECTION 1700

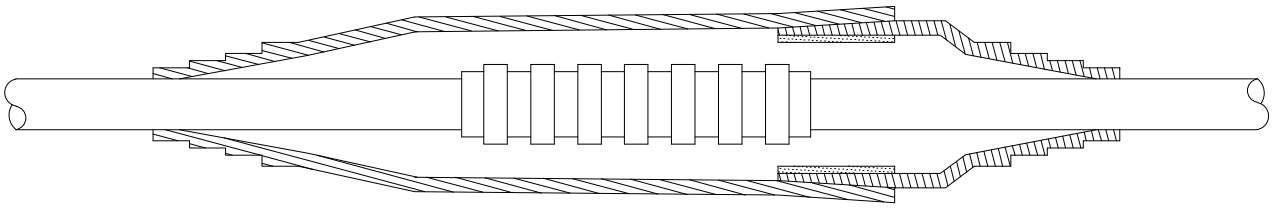

APPLY SILICONE GREASE TO CABLES FOR EASE OF ASSEMBLY.

NOTES:

1. THIS SPLICE IS FOR ANY 600 VOLT OR LESS APPLICATION.
2. THIS SPLICE CAN BE DIRECTLY BURIED OR USED IN A HAND HOLE OR VAULT.
3. OTHER SIZES ARE AVAILABLE FOR SPECIAL APPLICATIONS.

MATERIAL LIST

US-1

ITEM	QTY.	DESCRIPTION	SIN
1	1	SPLICE KIT, 600V, U.G.	1215
2	1	CONNECTOR, SLEEVE	#

WIRE SIZE	#SIN
2/0 AL	1166
4/0 AL	1167
350 AL	1169
2/0-4/0 AL	1454
4/0-350 AL	1455

OTHER USES

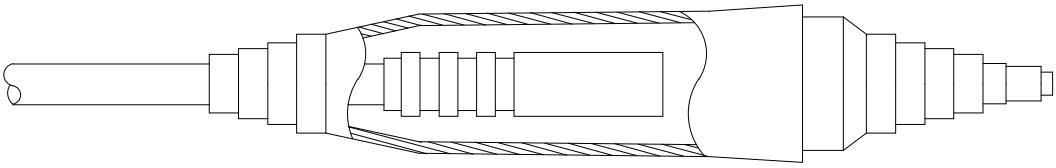

HALF-READY SPLICE

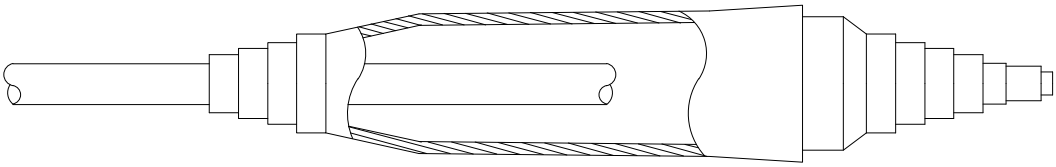

CABLE CAP

Clark Public Utilities

CONSTRUCTION STANDARDS

UNDERGROUND SECONDARY SPLICE

REVISIONS

R	DATE	ENGR	OPS
0	2/23/00	HWH	MA

PAGE: 1 of 1

US-1

CAD FILE: US-1

APP: JEH

DATE: 2/22/00

SECTION 1700

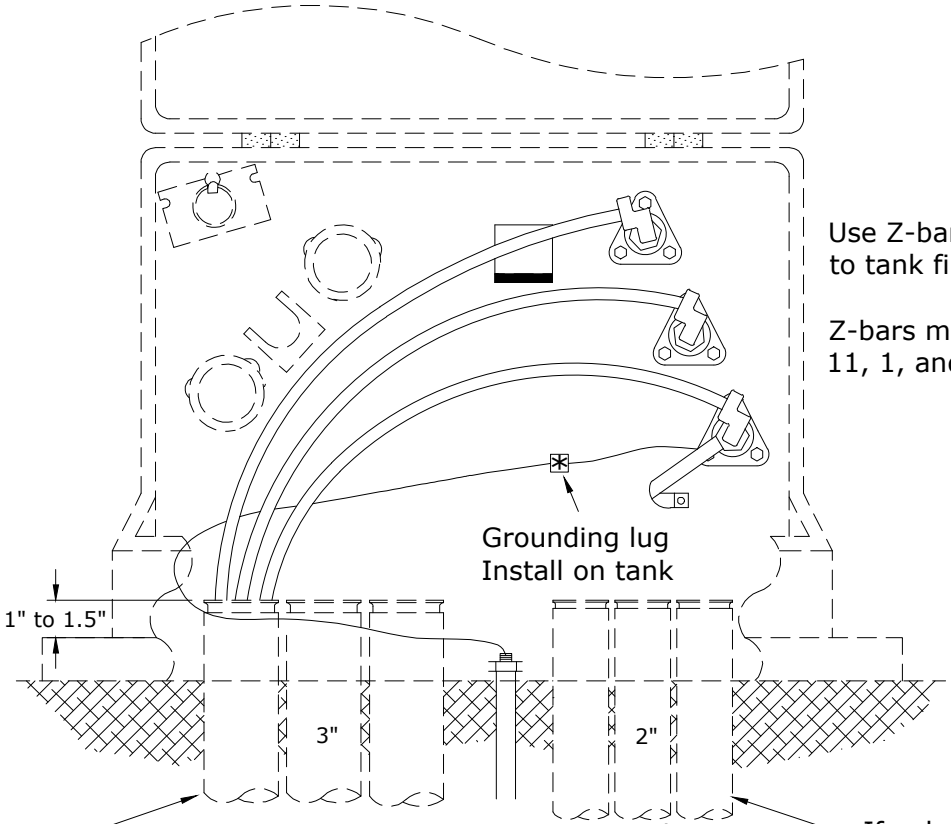

Secondary conduits as needed (Maximum 4 for 25 and 50 kVA - Maximum 6 for 75kVA)

Start Makeup of Cable in Back Conduits Left to Right

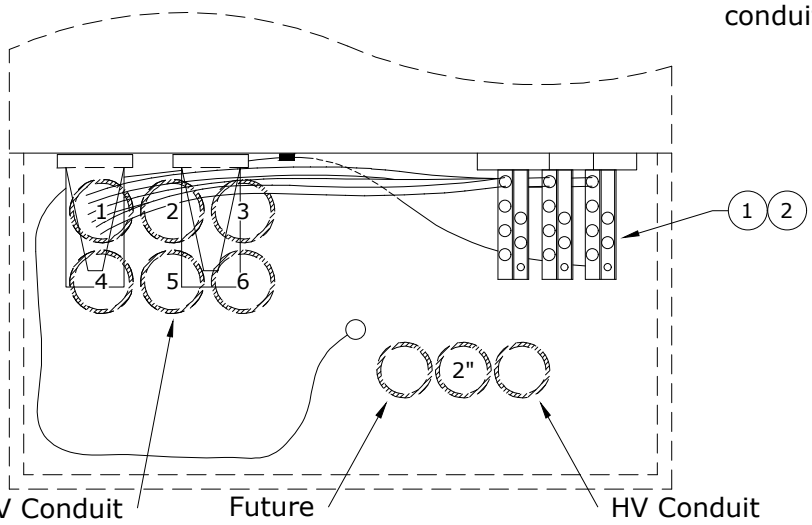

TOP VIEW OF PAD WINDOW

Notes:

1. Use Std US6 for 25 to 75 kVA padmounts with 5/8" stud.
2. Use Std US7 for 100 kVA padmounts with 1" stud.

Rev 3: Added US7 for 100 kVA padmount 1" stud for Z-bar connector, and updated drawing for maximum conduits.

ITEM NO.	DESCRIPTION	US6		US7	
		QTY.	S/N	QTY.	S/N
1	Connector, Z-bar, Al/Cu, 6-Position, #2-500MCM, w/ Streetlight Position	3	2265	3	2318
2	Cover, Connector, Z-bar, 6-Position	3	2266	3	2266

Clark Public Utilities

CONSTRUCTION STANDARDS

PADMOUNT TRANSFORMER ASSEMBLY
SINGLE PHASE SECONDARY

REVISIONS

R	DATE	ENGR	OPS
1	2/23/00	HWH	MA
2	12/29/04	LB	AH
3	5/8/24	DK	

PAGE: 1 of 1

US6,US7

CAD FILE: US6,US7

APP: GGW/BG

DATE: 4/1988

SECTION 1700

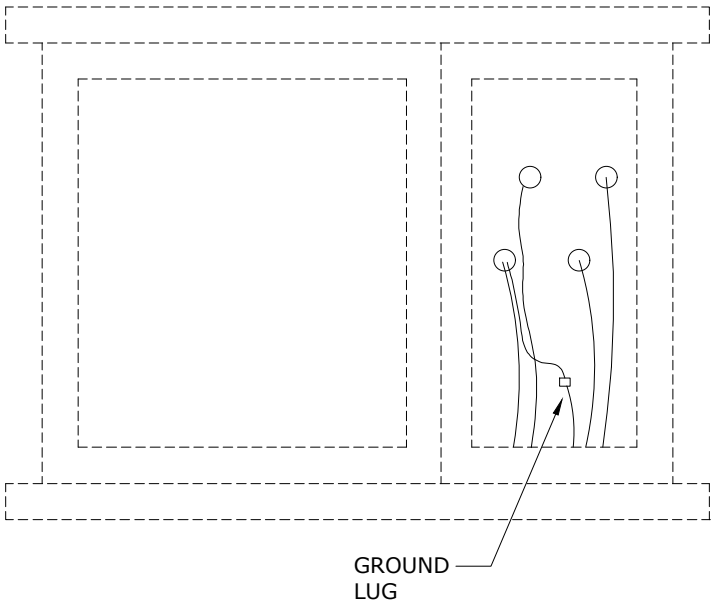

US35
US36

Notes:

1. This specification covers 3ø padmounted transformers 75 through 1500 kVA, 120/208 V and 277/480 V.
2. Conductor size range is 1/0 through 750 kcmil.
3. See Std UT30-UT32 - Underground Transformers - Section 1400 for mounting arrangement.

Rev. 2 - Removed US37 & 38 due to secondary bushing leaks and clearance problems in secondary compartment of transformer.

ITEM NO.	DESCRIPTION	US35	
		QTY.	S/N
1	Connector, PET, 6-750 Al/Cu 1/0 to 750	4	2129
2	1/2" Belleville Assembly, SS 2" Bolt and Washers W/ Bronze Nut	4	1389
3	Cover, Connector, 6-750	4	2176

ITEM NO.	DESCRIPTION	US36	
		QTY.	S/N
1	Connector, PET, 6-750 Al/Cu 1/0 to 750	4	2129
2	1/2" Belleville Assembly, SS 2 1/2" Bolt and Washers W/ Bronze Nut	4	2584
3	Cover, Connector, 6-750	4	2176

Clark Public Utilities

CONSTRUCTION STANDARDS

SECONDARY CONNECTORS
THREE PHASE PADMOUNT TRANSFORMERS

REVISIONS

R	DATE	ENGR	OPS
1	11/12/10	KJP	
2	9/21/21	JDK	

PAGE: 1 of 1

US35-US38

CAD FILE: US35

APP: HWH/MA
DATE: 2/23/00

SECTION 1700

1790
TRANSMISSION BASIC UNITS

12/30/2020

~	TPR1, -LC	Vertical Line Post Insulator
~	TPR2, -LC	Horizontal Line Post Insulator
C	TPR3, -LC	Double Horizontal Line Post Insulator
~	TPR4, -P	Suspension Insulator Swing Corner
~	TPR5	Deadend Assembly 336 ACSR to 900 ACSR Bare
~	TPR5P	Deadend Assembly 1557 ACSR/TW
C	TPR6	Double Deadend Assembly 336 ACSR to 900 ACSR Bare
N	TPR6P	Double Deadend Assembly 1557 ACSR/TW

N New Standard
R Redrawn Standard
C Changed Standard
~ No Change

ULTIMATE CANTILEVER
3180 lb

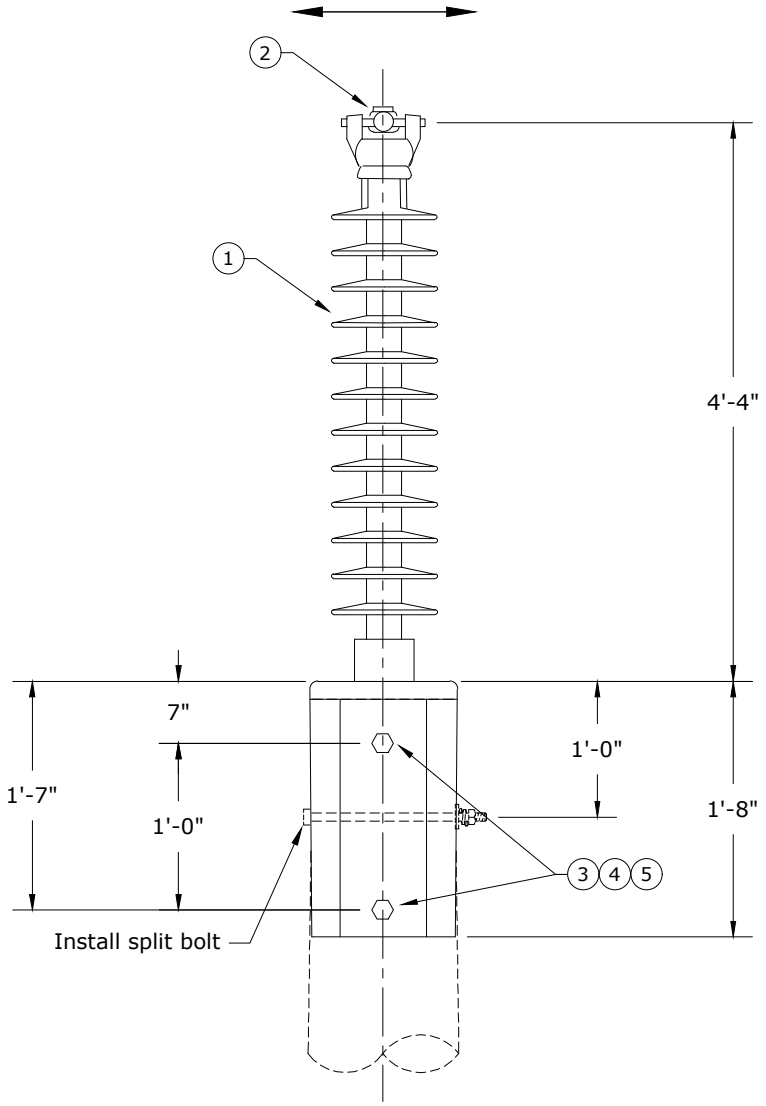

Note: For 336 ACSR or 397 AAC bare, use Std TPR1LC.

Rev. 3 - Updated Ultimate Cantilever rating.

ITEM NO.	DESCRIPTION	TPR1		TPR1LC ✲	
		QTY.	S/N	QTY.	S/N
1	Insulator, Line Post Vertical, 115kV, 3180 lb Ultimate Cantilever	1	2345	1	2345
2	Clamp, Clamptop, 795 AAC to 1557 ACSR/TW Bare	1	317	1	316
3	Bolt, Machine, 7/8" x 16", Galv., 25,400 lb Ultimate Tensile	2	1901	2	1901
4	Washer, Curved, Cast, 4" x 6"	2	1911	2	1911
5	Washer, Lock, Spring, Double Coil, Galv., 7/8"	2	2351	2	2351

Clark Public Utilities

CONSTRUCTION STANDARDS

115kV TRANSMISSION BASIC UNITS
VERTICAL LINE POST INSULATOR
795 AAC TO 1557 ACSR/TW BARE

REVISIONS

R	DATE	ENGR	OPS
1	3/28/02	HWH	DLK
2	1/4/17	CM	DK
3	5/4/20	JK	

PAGE: 1 of 1

TPR1,TPR1LC

CAD FILE: TPR1

APP:

DATE: 8/1/01

SECTION 1790

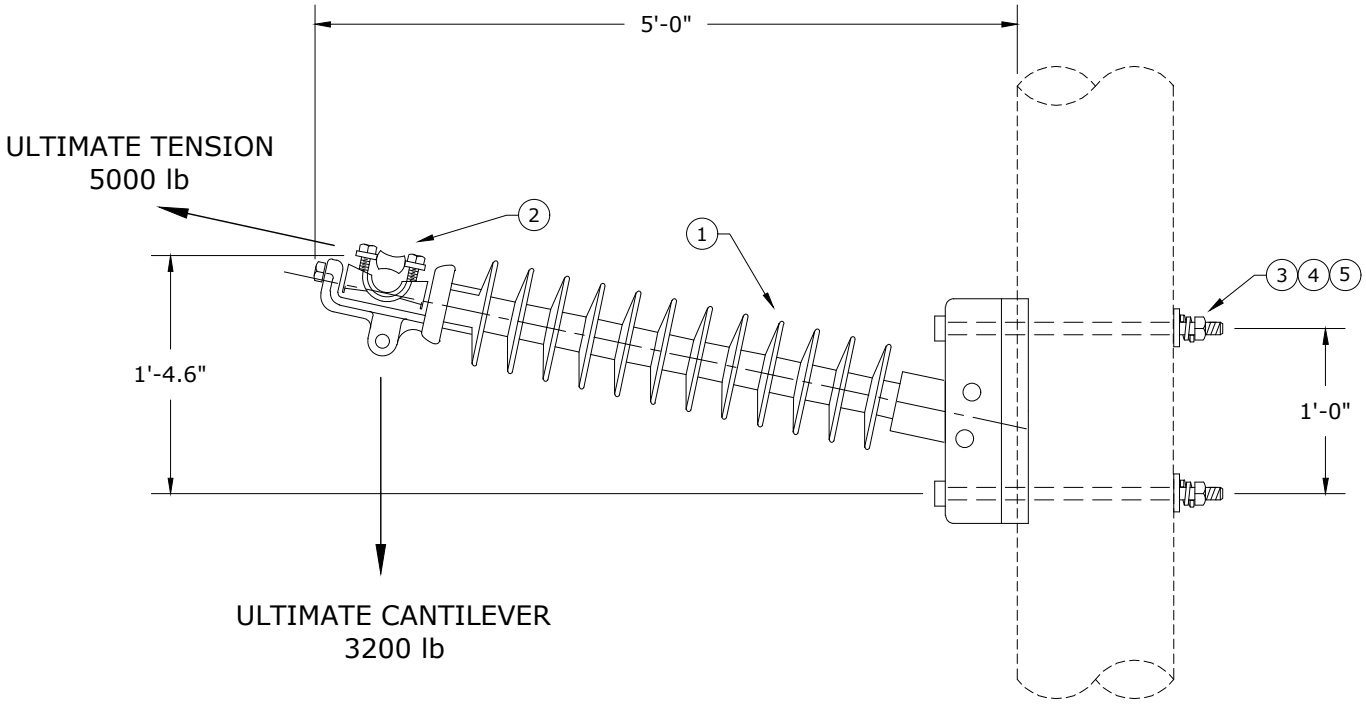

Note: For 336 ACSR or 397 AAC bare, use Std TPR2LC.

Rev. 3 - Updated Ultimate Cantilever rating.

ITEM NO.	DESCRIPTION	TPR2		TPR2LC ✲	
		QTY.	S/N	QTY.	S/N
1	Insulator, Line Post Horizontal, 115kV, 3200 lb Ultimate Cantilever	1	2346	1	2346
2	Clamp, Clamptop, 795 AAC to 1557 ACSR/TW Bare	1	317	1	316
3	Bolt, Machine, 7/8" x 16", Galv., 25,400 lb Ultimate Tensile	2	1901	2	1901
4	Washer, Curved, Cast, 4" x 6"	2	1911	2	1911
5	Washer, Lock, Spring, Double Coil, Galv., 7/8"	2	2351	2	2351

Clark Public Utilities

CONSTRUCTION STANDARDS

115kV TRANSMISSION BASIC UNITS
HORIZONTAL LINE POST INSULATOR
795 AAC TO 1557 ACSR/TW BARE

REVISIONS

R	DATE	ENGR	OPS
1	2/22/00	REDRAWN	IN CAD
2	1/4/17	CM	DK
3	5/4/20	JK	

PAGE: 1 of 1

TPR2,TPR2LC

CAD FILE: TPR2

APP:

DATE: 1/31/82

SECTION 1790

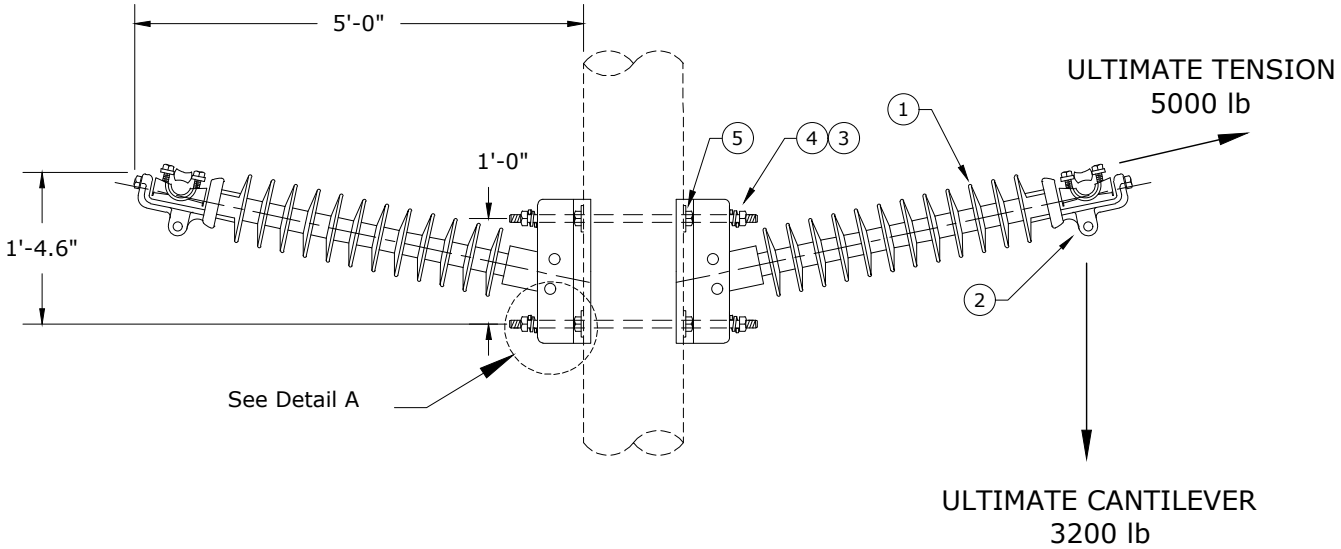

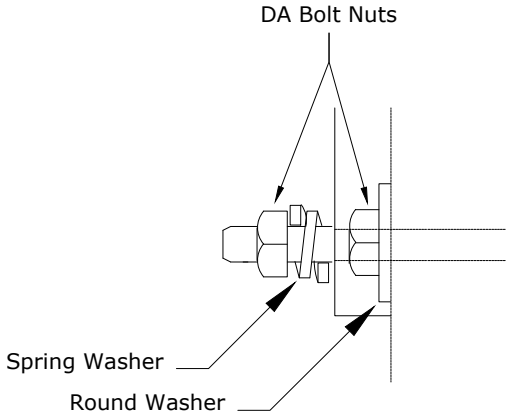

Detail A

Note: For 336 ACSR or 397 AAC bare, use Std TPR3LC.

Rev. 4 - Changed machine bolts to DA bolts.

ITEM NO.	DESCRIPTION	TPR3		TPR3LC	
		QTY.	S/N	QTY.	S/N
1	Insulator, Line Post Horizontal, 115kV, 3200 lb Ultimate Cantilever	2	2346	2	2346
2	Clamp, Clamptop, 795 AAC to 1557 ACSR/TW Bare	2	317	2	316
3	Bolt, Double Arm, 7/8" x 26", Galv, 25,400 lb Ultimate Tensile	2	2983 ✲	2	2983 ✲
4	Washer, Lock, Spring, Double Coil, Galv, 7/8"	4 ✲	2351	4 ✲	2351
5	Washer, Flat Round, Galv, 7/8" ✲	4	2978	4	2978

Clark Public Utilities

CONSTRUCTION STANDARDS

115kV TRANSMISSION BASIC UNITS
DOUBLE HORIZONTAL POST INSULATORS
795 AAC TO 1557 ACSR/TW BARE

REVISIONS

R	DATE	ENGR	OPS
1	3/28/02	HWH	DLK
2	1/4/17	CM	DK
3	5/4/20	JK	
4	12/28/20	KJP	

PAGE: 1 of 1

TPR3,TPR3LC

CAD FILE: TPR3

APP: LB/AH
DATE: 8/1/01

SECTION 1790

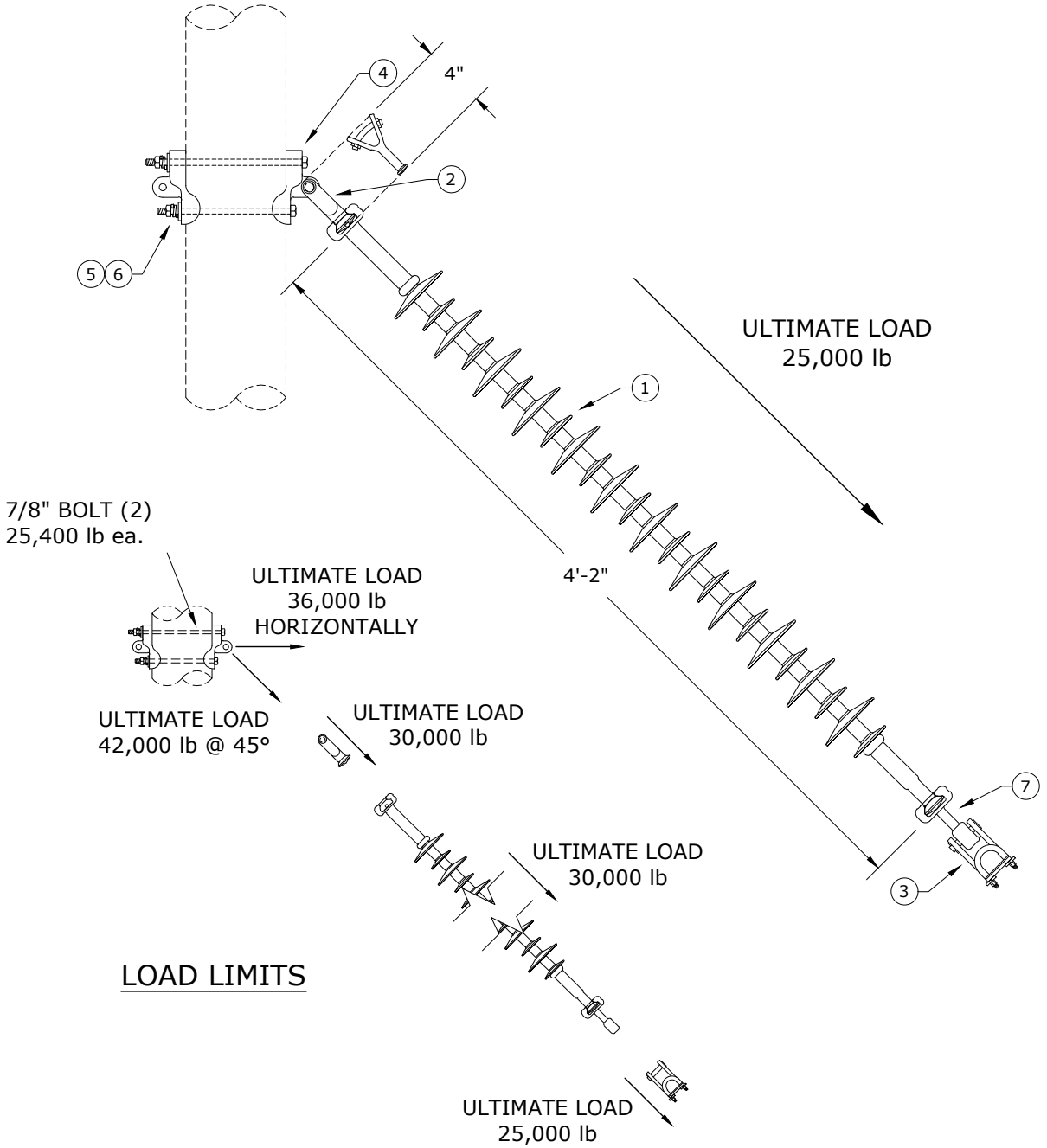

Note: For 1557 ACSR/TW bare, use Std TPR4P.

Rev. 3 - Updated suspension clamp rating.

ITEM NO.	DESCRIPTION	TPR4		TPR4P	
		QTY.	S/N	QTY.	S/N
1	Insulator, Suspension, Polymer, 115kV, 30,000 lb Ultimate	1	2350	1	2350
2	Clevis, Y-Ball, 30,000 lb Ultimate	1	320	1	320
3	Clamp, Suspension, 336 ACSR To 900 ACSR Bare, 25,000 lb Ultimate ✲	1	307	1	308
4	Plate, Pole Eye, 36,000 lb Ultimate	2	1908	2	1908
5	Bolt, Machine, 7/8" x 16", Galv., 25,400 lb Ultimate	2	1901	2	1901
6	Washer, Lock, Spring, Double Coil, Galv., 7/8"	2	2351	2	2351
7	Socket/Eye, 13/16" Eye, 1" Wide Base	1	1681	1	1681

Clark Public Utilities

CONSTRUCTION STANDARDS

115kV TRANSMISSION BASIC UNITS
SUSPENSION INSULATOR-SWING CORNER
336 ACSR TO 900 ACSR BARE

REVISIONS

R	DATE	ENGR	OPS
1	3/28/02	HWH	DLK
2	1/4/17	CM	DK
3	2/11/19	KJP	

PAGE: 1 of 1

TPR4,TPR4P

CAD FILE: TPR4

APP:

DATE: 8/1/01

SECTION 1790

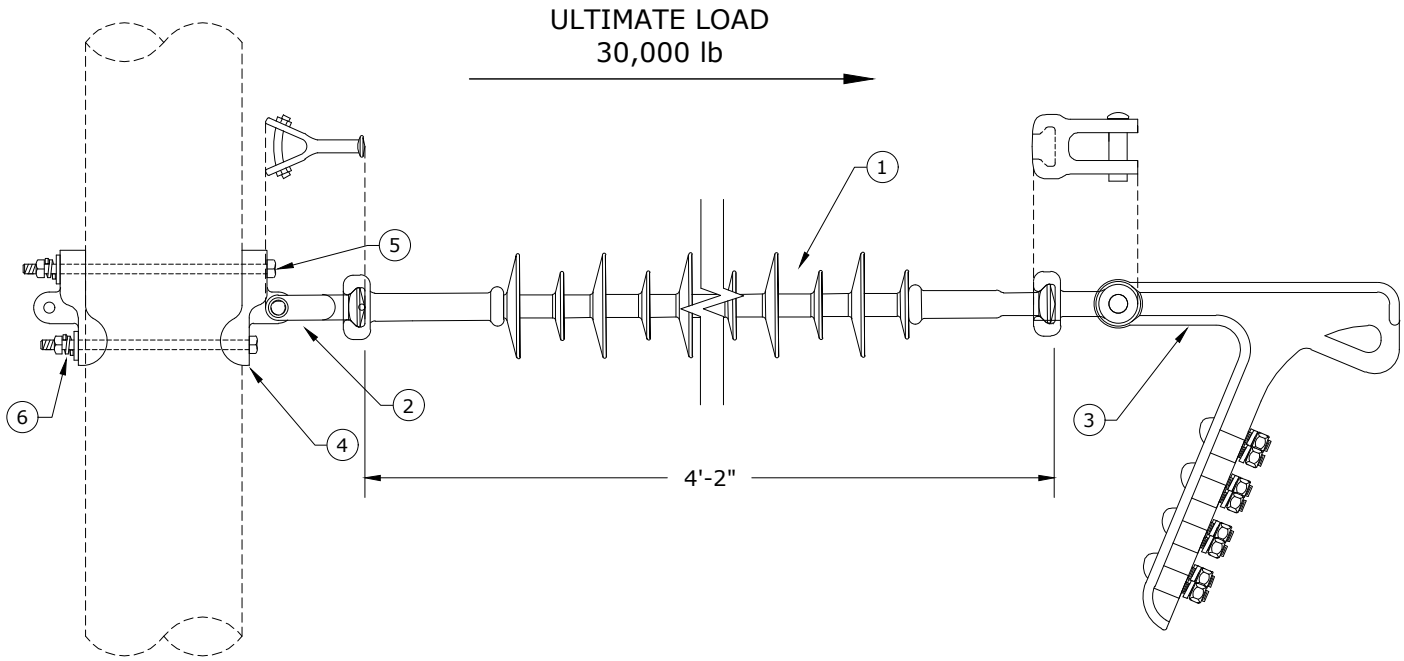

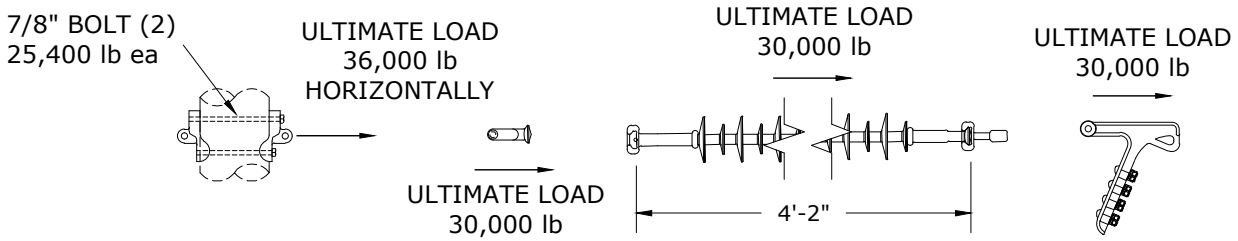

LOAD LIMITS

Note: For 1557 ACSR/TW bare, use Std TPR5P.

Rev. 2 - Deleted TPR5A w/ split bolt, updated materials, and added note.

ITEM NO.	DESCRIPTION	TPR5 QTY.	TPR5 S/N
1	Insulator, Suspension, Polymer, 115kV, 30,000 lb Ultimate	1	2350
2	Clevis, Y-Ball, 30,000 lb Ultimate	1	320
3	Clamp, Strain, 336 ACSR to 900 ACSR, Deadend, 30,000 lb Ultimate	1	2467
4	Plate, Pole Eye, 36,000 lb Ultimate	2	1908
5	Bolt, Machine, 7/8" x 16", Galv., 25,400 lb Ultimate	2	1901
6	Washer, Lock, Spring, Double Coil, Galv., 7/8"	2	2351

Clark Public Utilities

CONSTRUCTION STANDARDS

115kV TRANSMISSION BASIC UNITS
DEADEND ASSEMBLY
336 ACSR TO 900 ACSR BARE

REVISIONS

R	DATE	ENGR	OPS
1	3/28/02	HWH	DLK
2	8/23/17	CM	DK

PAGE: 1 of 1

TPR5

CAD FILE: TPR5

APP:

DATE: 8/1/01

SECTION 1790

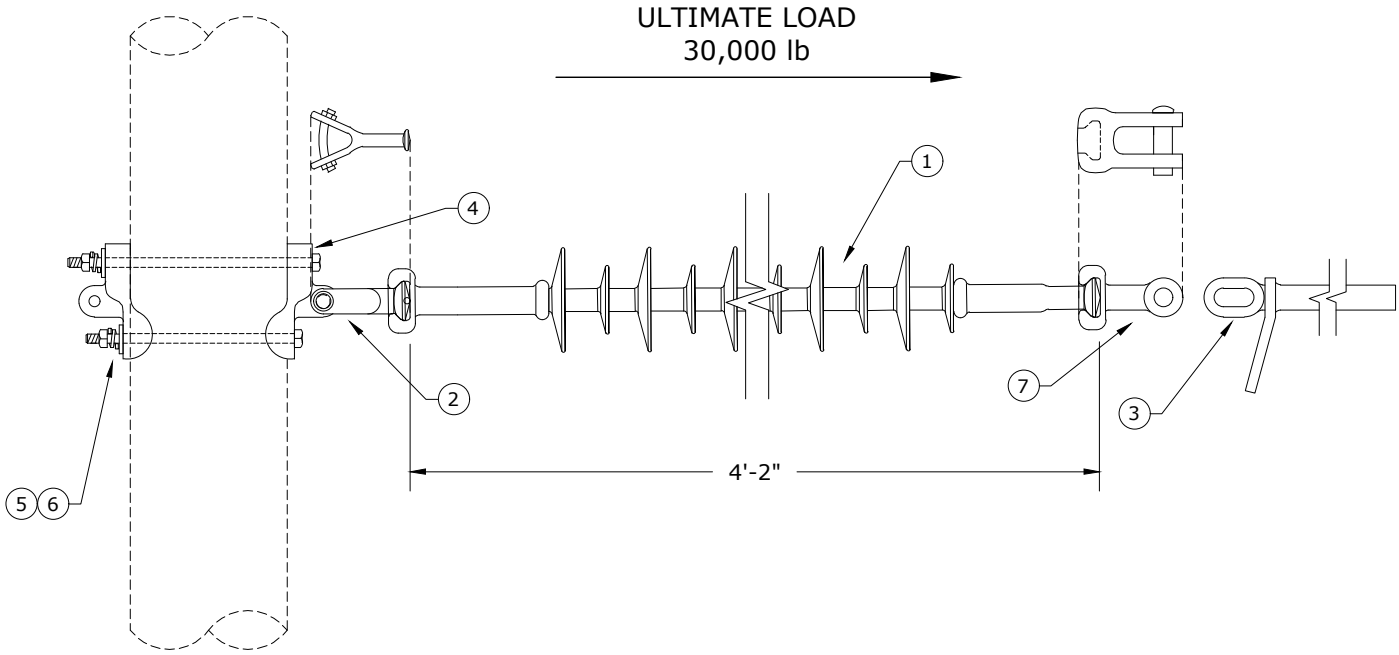

Rev. 1 - Changed from TSVDE-P to TPR5P.

ITEM NO.	DESCRIPTION	TPR5P	
		QTY.	S/N
1	Insulator, Suspension, Polymer, 115kV, 30,000 lb Ultimate	1	2350
2	Clevis, Y-Ball, 30,000 lb Ultimate	1	320
3	Deadend Compression, W/ Jumper, Terminal Pad, 1557 ASCR/TW	1	2421
4	Plate, Pole Eye, 36,000 lb Ultimate	2	1908
5	Bolt, Machine, 7/8" x 16", Galv., 25,400 lb Ultimate	2	1901
6	Washer, Lock, Spring, Double Coil, Galv., 7/8"	2	2351
7	Clevis, Socket, 30,000 lb Ultimate	1	333

Clark Public Utilities

CONSTRUCTION STANDARDS

115kV TRANSMISSION BASIC UNITS
DEADEND ASSEMBLY
1557 ACSR/TW

REVISIONS

R	DATE	ENGR	OPS
1	1/4/17	CM	DK

PAGE: 1 of 1

TPR5P

CAD FILE: TPR5P

APP:

DATE: 5/6/1996

SECTION 1790

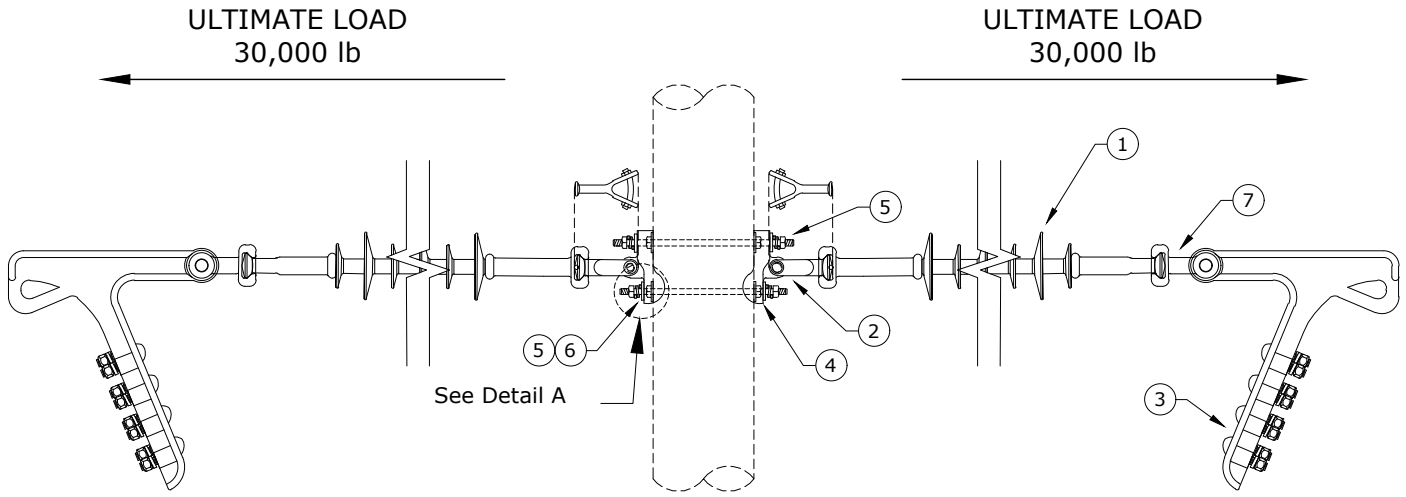

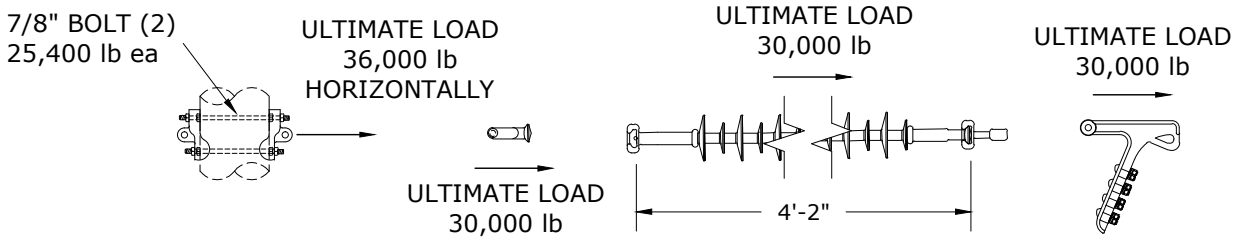

LOAD LIMITS

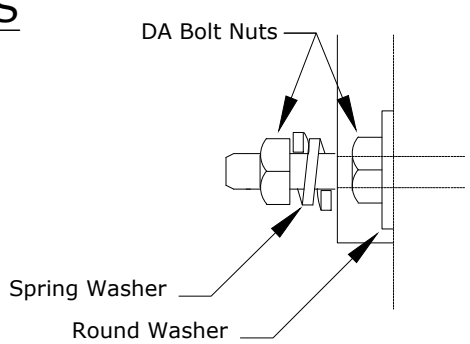

Detail A

Note: For 1557 ACSR/TW bare, use Std TPR6P.

Rev. 1 - Changed machine bolts to DA bolts.

ITEM NO.	DESCRIPTION	TPR6 QTY.	TPR6 S/N
1	Insulator, Suspension, Polymer, 115kV, 30,000 lb Ultimate	2	2350
2	Clevis, Y-Ball, 30,000 lb Ultimate	2	320
3	Clamp, Strain, 336 ACSR to 900 ACSR, D.E., 30,000 lb Ultimate	2	2467
4	Plate, Pole Eye, 36,000 lb Ultimate	2	1908
5	Bolt, Double Arm, 7/8" x 20", Galv, 25,400 lb Ultimate ✡	2	2980✡
6	Washer, Lock, Spring, Double Coil, Galv, 7/8"	4✡	2351
7	Socket/Eye, 13/16" Eye, 1" Wide Base	2	1681
8	Washer, Flat Round Galv, 7/8"✡	4	2978

Clark Public Utilities

CONSTRUCTION STANDARDS

115kV TRANSMISSION BASIC UNITS
DOUBLE DEADEND ASSEMBLY
336 ACSR TO 900 ACSR BARE

REVISIONS

R	DATE	ENGR	OPS
1	12/28/20	KJP	

PAGE: 1 of 1

TPR6

CAD FILE: TPR6

APP: CM/DK
DATE: 1/4/17

SECTION 1790

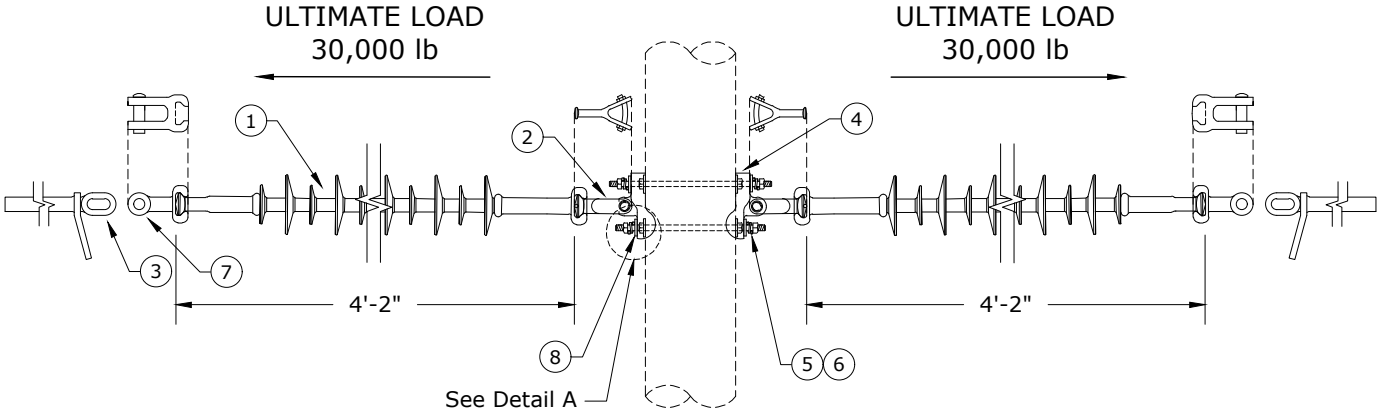

LOAD LIMITS

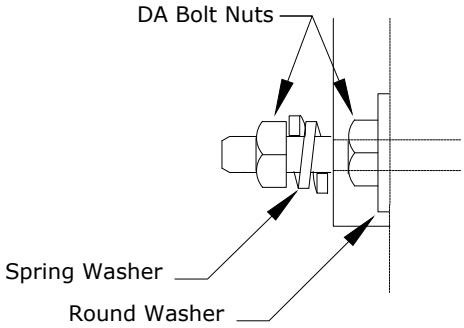

Detail A

ITEM NO.	DESCRIPTION	TPR6P	
		QTY.	S/N
1	Insulator, Suspension, Polymer, 115kV, 30,000 lb Ultimate	2	2350
2	Clevis, Y-Ball, 30,000 lb Ultimate	2	320
3	Deadend Compression, W/ Jumper, Terminal Pad, 1557 ASCR/TW	2	2421
4	Plate, Pole Eye, 36,000 lb Ultimate	2	1908
5	Bolt, Double Arm, 7/8" x 20", Galv, 25,400 lb Ultimate	2	2980
6	Washer, Lock, Spring, Double Coil, Galv, 7/8"	4	2351
7	Clevis, Socket, 30,000 lb Ultimate	2	333
8	Washer, Flat Round Galv, 7/8"	4	2978

Clark Public Utilities

CONSTRUCTION STANDARDS

115kV TRANSMISSION BASIC UNITS
DOUBLE DEADEND ASSEMBLY
1557 ACSR/TW

REVISIONS

R	DATE	ENGR	OPS

PAGE: 1 of 1

TPR6P

CAD FILE: TPR6P

APP: KJP
DATE: 12/28/20

SECTION 1790

1800
TRANSMISSION

2/11/2025

~	TC22, -P	115kV Vertical Turn - 30° to 60°
~	TC25, -LC, -P	115kV Vertical Double Deadend - 0°
~	TC41, -P	115kV Vertical Deadend
~	TC44, -P	115kV Vertical Double Deadend - 60° to 90°
~	TFT1,TFT1LC	115kV Flat Top
C	THPA, -LC	115kV Twiggy - 0° to 4°
~	THPB, -LC	115kV Reverse Twiggy - 5° to 20°
~	TSW, -P	115kV Opposing Phase Vertical Switch
C	TV21, -LC	115kV Opposing Phase w/Post Top
~	TV22, -LC	115kV Opposing Phase - 0° to 4°
~	TV23, -LC	115kV Vertical - 0° to 10°
C	TV24, -LC	115kV Vertical w/Post Top - 0° to 4°
~	TV25	115kV Vertical - 11° to 30°

N New Standard
R Redrawn Standard
C Changed Standard
~ No Change

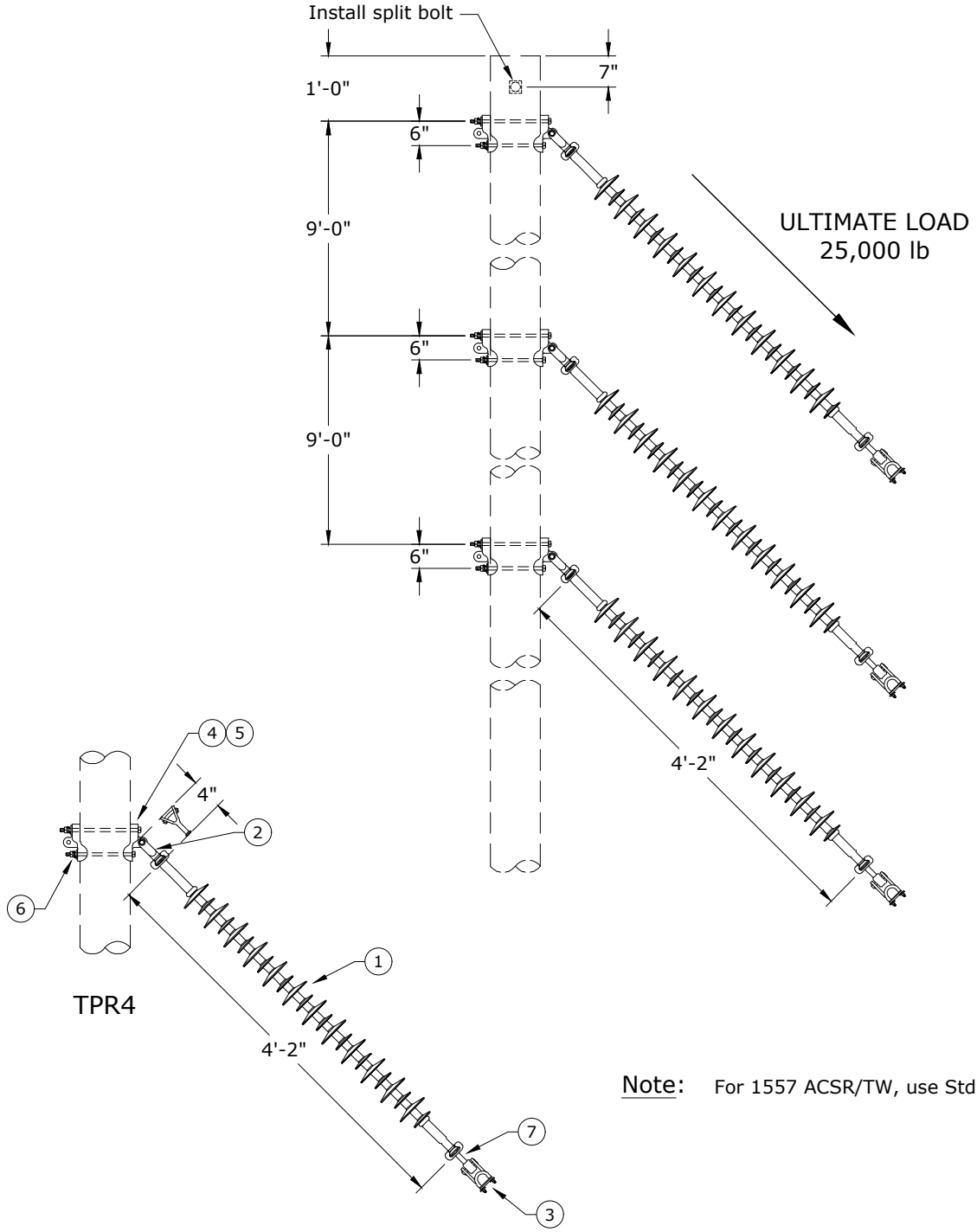

Note: For 1557 ACSR/TW, use Std TC22P.

Rev. 2 - Updated material, removed static wire, and added note.

ITEM NO.	DESCRIPTION	TC22 TPR4(3) QTY.	TC22 TPR4(3) S/N	TC22P ✲ TPR4P(3) QTY.	TC22P ✲ TPR4P(3) S/N
1	Insulator, Suspension, Polymer, 115kV, 30,000 lb Ultimate	3	2350	3	2350
2	Clevis, Y-Ball, 30,000 lb Ultimate	3	320	3	320
3	Clamp, Suspension, Socket, 336 ACSR To 900 ACSR Bare, 25,400 lb Ult	3	307	3	308
4	Plate, Pole Eye, Heavy, 36,000 lb Ultimate	6	1908	6	1908
5	Bolt, Machine, 7/8" x 16", Galv., 25,400 lb Ultimate Tensile	6	1901	6	1901
6	Washer, Lock, Spring, Double Coil, Galv., 7/8"	6	2351	6	2351
7	Socket/Eye, 13/16" Eye, 1" Wide Base	3	1681	3	1681

Clark Public Utilities

CONSTRUCTION STANDARDS

115kV TRANSMISSION
VERTICAL TURN-30° TO 60°
336 ACSR TO 900 ACSR BARE

REVISIONS

R	DATE	ENGR	OPS
1	8/01	REDRAWN	IN CAD
2	8/23/17	CM	DK

PAGE: 1 of 1

TC22,TC22P

CAD FILE: TC22

APP:

DATE: 8/5/66

SECTION 1800

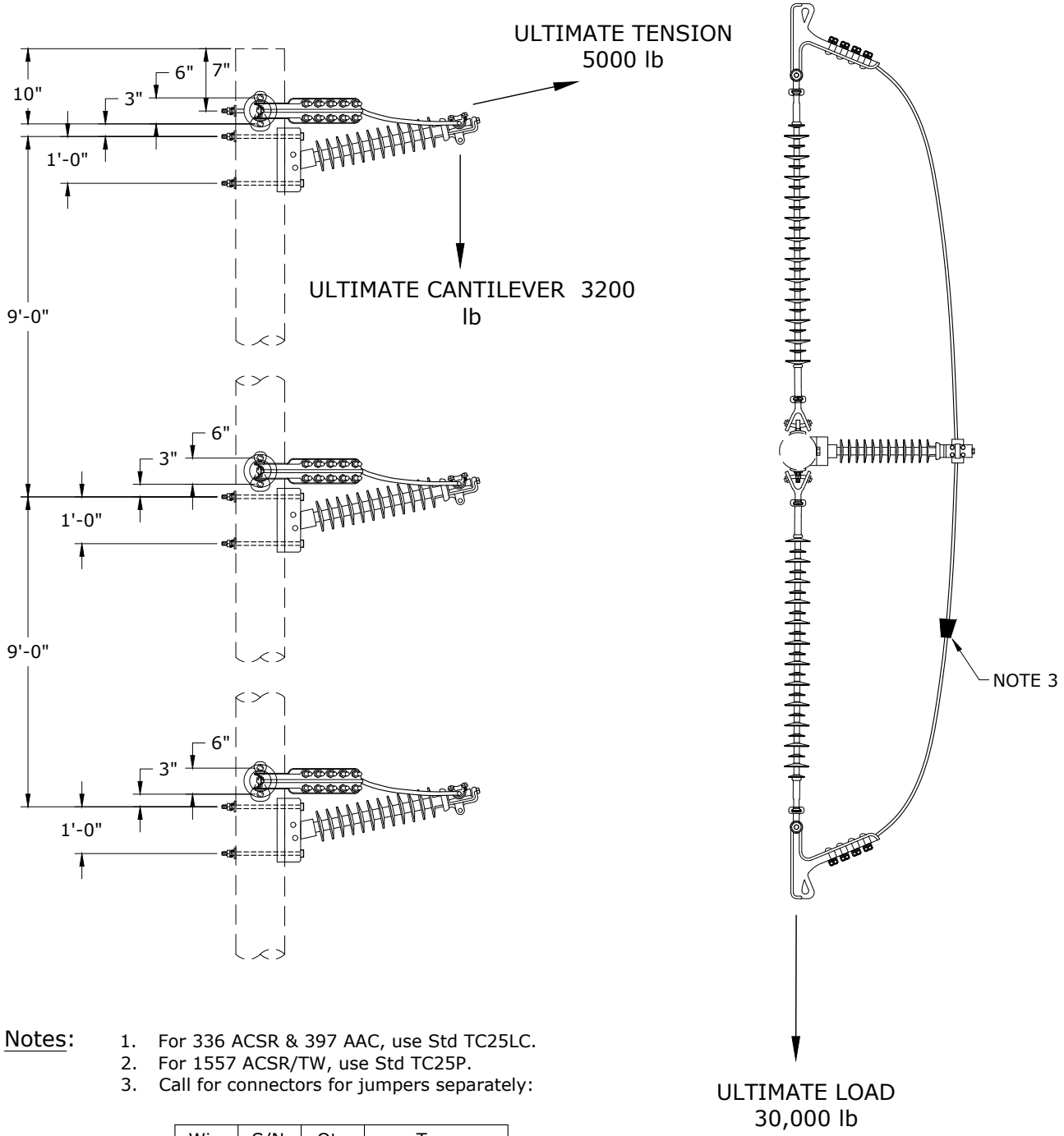

Notes:

1. For 336 ACSR & 397 AAC, use Std TC25LC.
2. For 1557 ACSR/TW, use Std TC25P.
3. Call for connectors for jumpers separately:

Wire Size	S/N	Qty	Type
336	2501	3	Wedge
397	2501	3	Wedge
795	2477	3	Wedge
900	2451	3	Compression
1557	2778	3	Compression

Rev. 4 - Changed machine bolts to DA bolts.

Clark Public Utilities

CONSTRUCTION STANDARDS

115kV TRANSMISSION
VERTICAL DOUBLE DEADEND
795 AAC TO 900 ACSR BARE

REVISIONS

R	DATE	ENGR	OPS
1	8/01	REDRAWN	IN CAD
2	8/23/17	CM	DK
3	5/4/20	JK	
4	12/28/20	KJP	

PAGE: 1 of 2

TC25,TC25LC,TC25P

CAD FILE: TC25

APP: PS/RW

DATE: 2/70

SECTION 1800

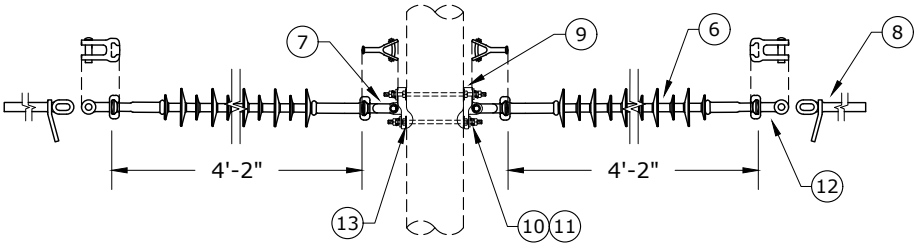

TPR6P

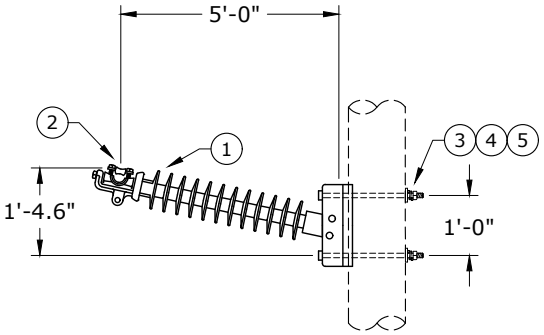

TPR2

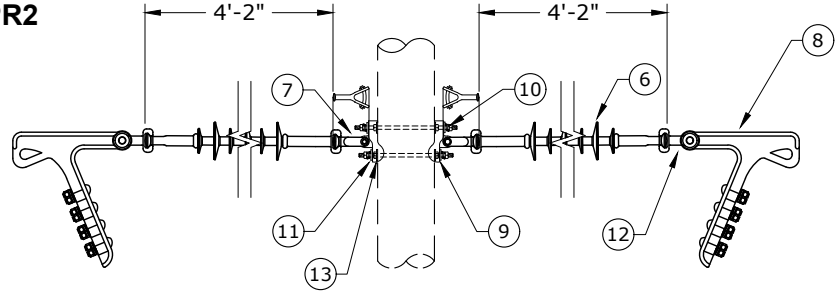

TPR6

Rev. 4 - Changed machine bolts to DA bolts.

ITEM NO.	DESCRIPTION	TC25		TC25LC✲		TC25P ✲	
		TPR2 (3)		TPR2LC (3)		TPR2 (3)	
		QTY.	S/N	QTY.	S/N	QTY.	S/N
1	Insulator, Line Post Horz, 115kV, 3200 lb Ult Cantilever	3	2346	3	2346	3	2346
2	Clamp, Clamptop, 795 AAC To 1557 ACSR/TW Bare	3	317	3	316	3	317
3	Bolt, Machine, 7/8" x 16", Galv, 25,400 lb Ultimate	6	1901	6	1901	6	1901
4	Washer, Curved, Cast, 4" x 6"	6	1911	6	1911	6	1911
5	Washer, Lock, Spring, Double Coil, Galv, 7/8"	6	2351	6	2351	6	2351
ITEM NO.	DESCRIPTION	TPR6(3)		TPR6(3)		TPR6P(3)	
		QTY.	S/N	QTY.	S/N	QTY.	S/N
6	Insulator, Suspension, Polymer, 115kV, 30,000 lb Ultimate	6	2350	6	2350	6	2350
7	Clevis, Y-Ball, 30,000 lb Ultimate	6	320	6	320	6	320
8	Clamp, Strain/ Deadend, Compression	6	2467	6	2467	6	2421
9	Plate, Pole Eye, 36,000 lb Ultimate	6	1908	6	1908	6	1908
10	Bolt, Double Arm, 7/8" x 20", Galv, 25,400 lb Ultimate	6	2980	6	2980	6	2980
11	Washer, Lock, Spring, Double Coil, Galv, 7/8"	12	2351	12	2351	12	2351
12	Socket/Eye, 13/16" Eye, 1" Wide Base/ Clevis, Socket	6	1681	6	1681	6	333
13	Washer, Flat Round Galv, 7/8"	12	2978	12	2978	12	2978

Clark Public Utilities

CONSTRUCTION STANDARDS

115kV TRANSMISSION
VERTICAL DOUBLE DEADEND
795 AAC TO 900 ACSR BARE

REVISIONS

R	DATE	ENGR	OPS
1	8/01	REDRAWN	IN CAD
2	8/23/17	CM	DK
3	5/4/20	JK	
4	12/28/20	KJP	

PAGE: 2 of 2

TC25,TC25LC,TC25P

CAD FILE: TC25

APP: PS/RW

DATE: 2/70

SECTION 1800

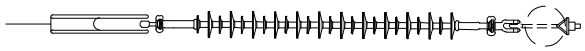

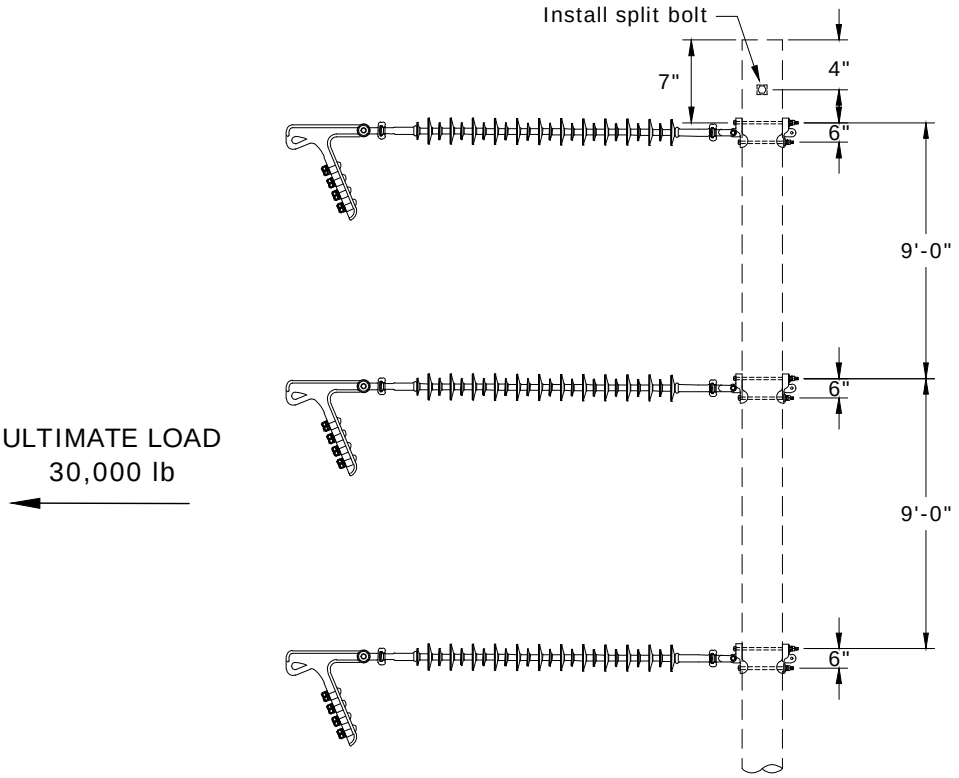

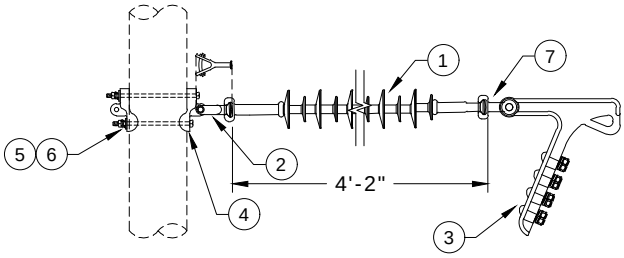

TPR5

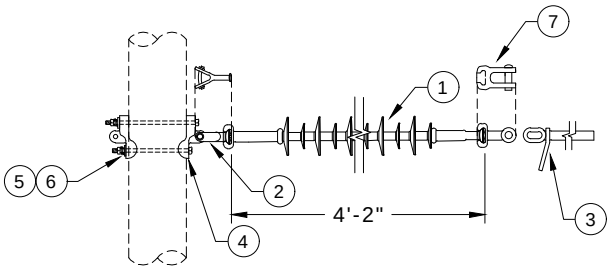

TPR5P

Note: For 1557 ACSR/TW, use Std TC41P.

Rev. 2 - Updated material, removed static wire, added note and TC41P.

ITEM NO.	DESCRIPTION	TC41 TPR5 (3) QTY.	TC41 TPR5 (3) S/N	TC41P TPR5P (3) QTY.	TC41P TPR5P (3) S/N
1	Insulator, Suspension, Polymer, 115kV, 30,000 lb Ultimate	3	2350	3	2350
2	Clevis, Y-Ball, 30,000 lb Ultimate	3	320	3	320
3	Clamp, Strain, 336 ACSR To 900 ACSR Bare, D.E., 30,000 lb Ultimate	3	2467	3	2421
4	Plate, Pole Eye, 36,000 lb Ultimate	6	1908	6	1908
5	Bolt, Machine, 7/8" x 16", Galv., 25,400 lb Ultimate Tensile	6	1901	6	1901
6	Washer, Lock, Spring, Double Coil, Galv., 7/8"	6	2351	6	2351
7	Socket/Eye, 13/16" Eye, 1" Wide Base	3	1681	3	333

Clark Public Utilities

CONSTRUCTION STANDARDS

115kV TRANSMISSION
VERTICAL DEADEND
336 ACSR TO 900 ACSR BARE

REVISIONS

R	DATE	ENGR	OPS
1	8/01	REDRAWN	IN CAD
2	8/23/17	CM	DK

PAGE: 1 of 1

TC41,TC41P

CAD FILE: TC41

APP:

DATE: 8/5/66

SECTION 1800

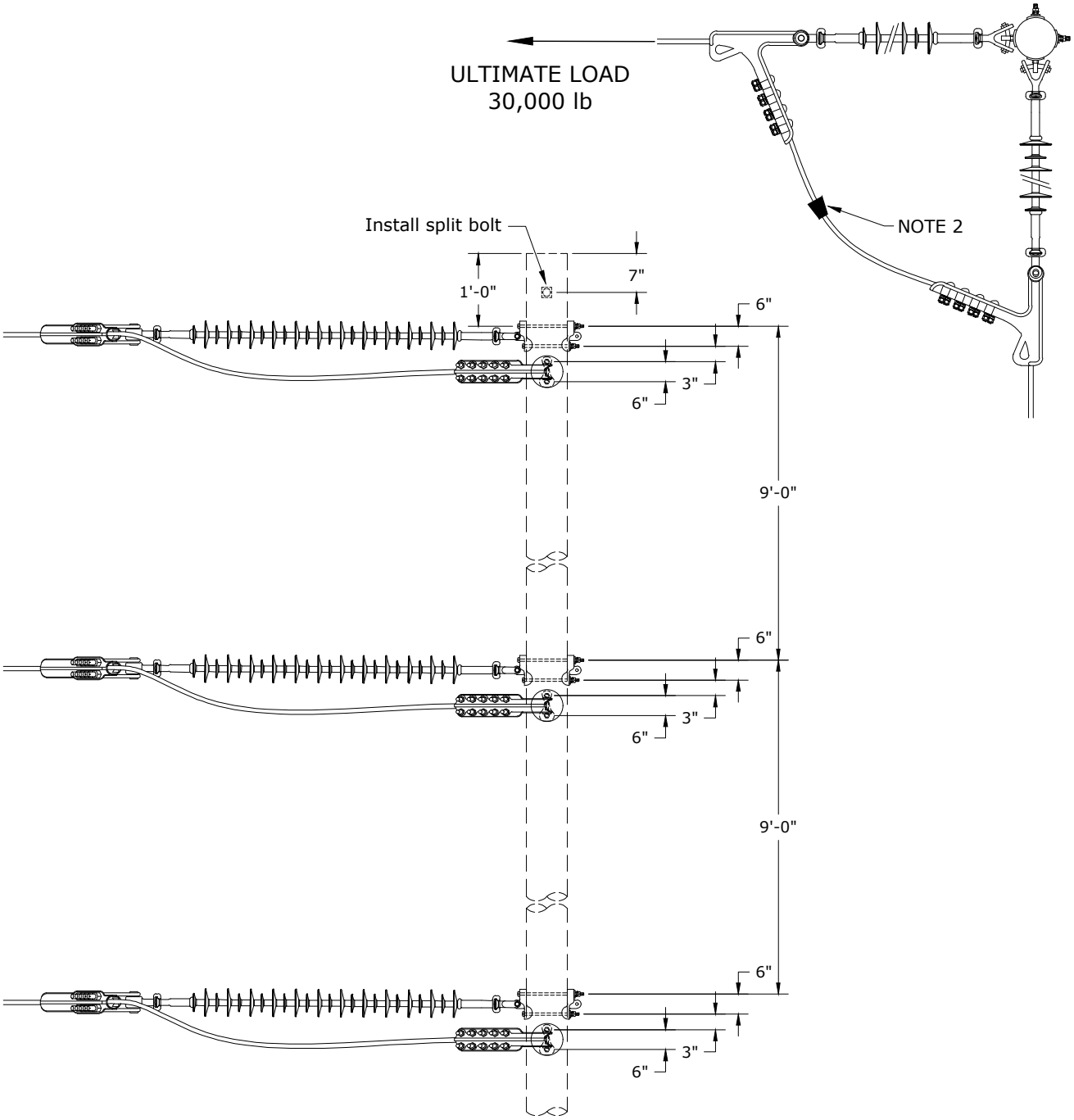

Notes:

1. For 1557 ACSR/TW, use Std TC44P.
2. Call for connectors for jumpers separately:

Wire Size	S/N	Qty	Type
336	2501	3	Wedge
397	2501	3	Wedge
795	2477	3	Wedge
900	2451	3	Compression
1557	2778	3	Compression

Rev. 2 - Updated material, removed static wire, added note and TC44P.

Clark Public Utilities

CONSTRUCTION STANDARDS

115kV TRANSMISSION
VERTICAL DOUBLE DEADEND-60° TO 90°
336 ACSR TO 900 ACSR BARE

REVISIONS

R	DATE	ENGR	OPS
1	8/01	REDRAWN	IN CAD
2	8/23/17	CM	DK

PAGE: 1 of 2

TC44,TC44P

CAD FILE: TC44

APP:

DATE: 8/5/66

SECTION 1800

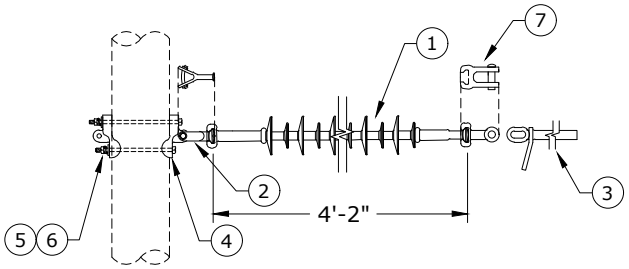

TPR5P

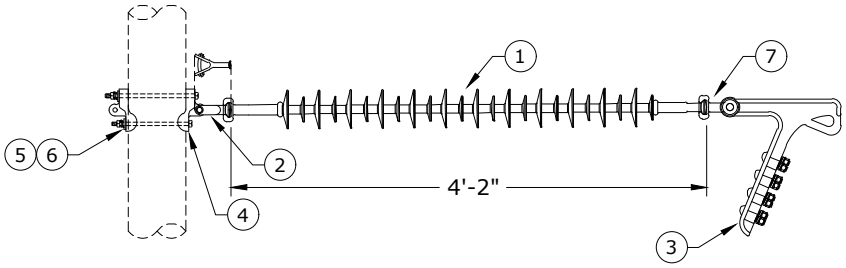

TPR5

Rev. 2 - Updated material, removed static wire, added note and TC44P.

ITEM NO.	DESCRIPTION	TC44 TPR5 (6) QTY.	TC44 TPR5 (6) S/N	TC44P ✡ TPR5P (6) QTY.	TC44P ✡ TPR5P (6) S/N
1	Insulator, Suspension, Polymer, 115kV, 30,000 lb Ultimate	6	2350	6	2350
2	Clevis, Y-Ball, 30,000 lb Ultimate	6	320	6	320
3	Clamp, Strain, 336 ACSR To 900 ACSR Bare, D.E., 30,000 lb Ultimate	6	2467	6	2421
4	Plate, Pole Eye, 36,000 lb Ultimate	12	1908	12	1908
5	Bolt, Machine, 7/8" x 16", Galv., 25,400 lb Ultimate Tensile	12	1901	12	1901
6	Washer, Lock, Spring, Double Coil, Galv., 7/8"	12	2351	12	2351
7	Socket/Eye, 13/16" Eye, 1" Wide Base	6	1681	6	333

Clark Public Utilities

CONSTRUCTION STANDARDS

115kV TRANSMISSION
VERTICAL DOUBLE DEADEND-60° TO 90°
336 ACSR TO 900 ACSR BARE

REVISIONS

R	DATE	ENGR	OPS
1	8/01	REDRAWN	IN CAD
2	8/23/17	CM	DK

PAGE: 2 of 2

TC44,TC44P

CAD FILE: TC44

APP:

DATE: 8/5/66

SECTION 1800

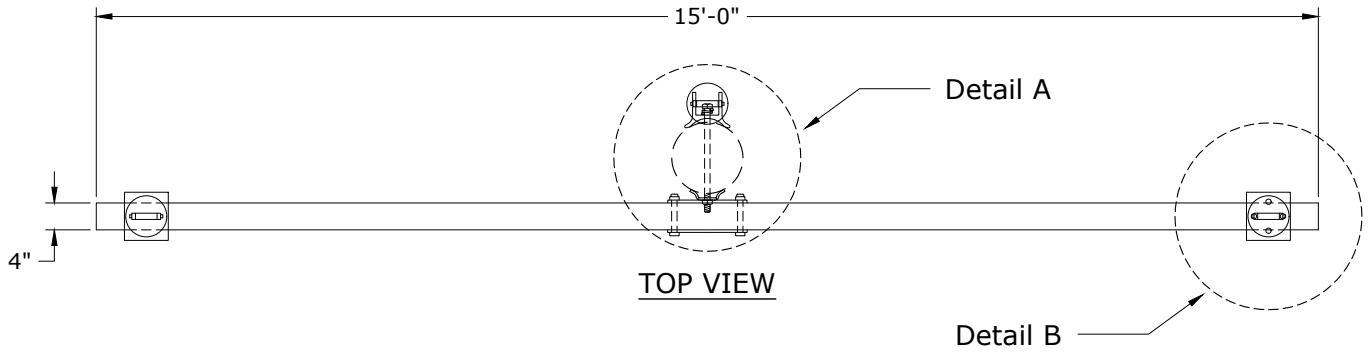

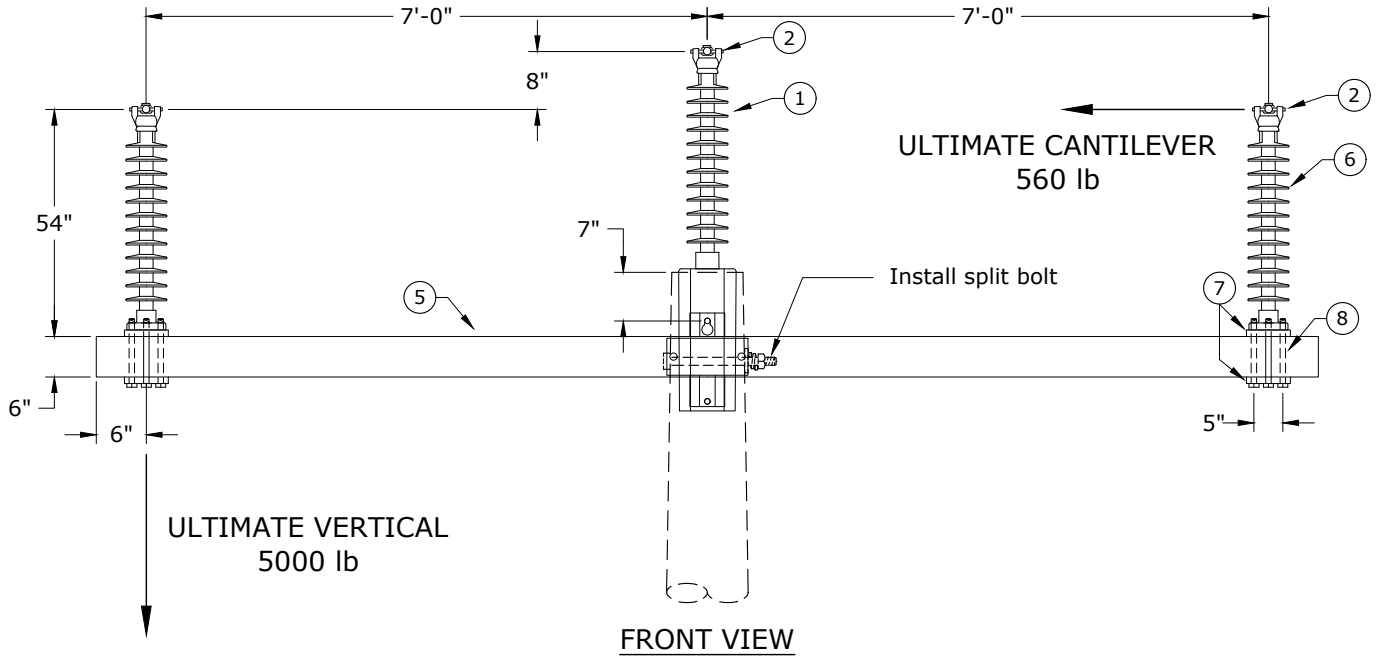

Clark Public Utilities

CONSTRUCTION STANDARDS

115kV TRANSMISSION
FLAT TOP
795 AAC TO 1557 ACSR/TW

REVISIONS			
R	DATE	ENGR	OPS

PAGE:		CAD FILE:	APP: CM/GM	SECTION
1 of 2	TFT1,TFT1LC	TFT1	DATE: 11/19/20	1800

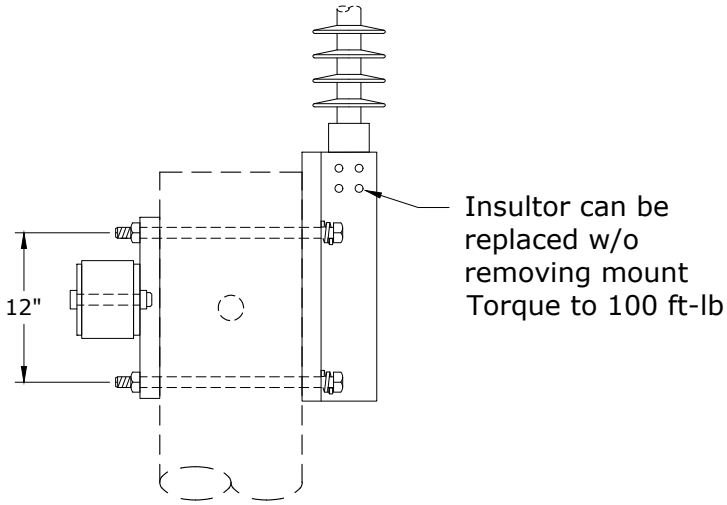

SIDE VIEW

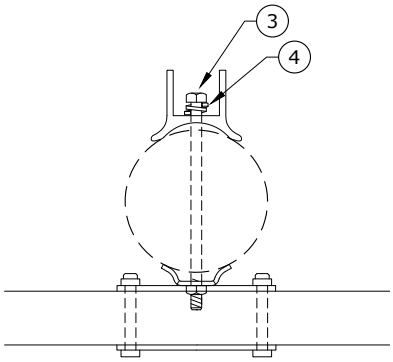

DETAIL A
Pole Top Assembly

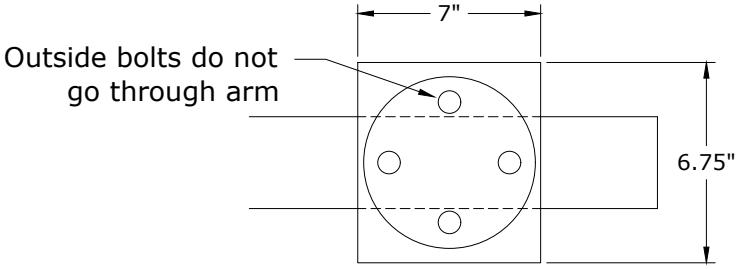

DETAIL B
Arm-Plate Assembly

Note: For 336 ACSR and 397 AAC, use Std TFT1LC.

ITEM NO.	DESCRIPTION	TFT1		TFT1LC	
		QTY.	S/N	QTY.	S/N
1	Insulator, 115kV, Polymer, Vertical Line Post, 3,180 lb Ultimate Cantilever, Pole-Top Mt	1	2345	1	2345
2	Clamp, Wire, Clamptop, 2,800 lb Ultimate Body Strength	3	317	3	316
3	Bolt, Machine, 7/8" x 16", Galv., 25,400 lb Ultimate Tensile	2	1901	2	1901
4	Washer, Lock, Spring, Double Coil, Galv., 7/8"	2	2351	2	2351
5	Arm, Cross (Transmission), Fiberglass, 15' x 4" x 6"	1	2918	1	2918
6	Insulator, 115kV, Polymer, Vertical Line Post, 3,180 lb Ultimate Cantilever, Flat Mount	2	2916	2	2916
7	Plate, 115kV Insulator, 1/2" Thick, 5" Diameter Bolt Circle	4	2917	4	2917
8	Bolt, Machine, 5/8" x 10", Galv., 12,400 lb Ultimate Tensile	8	154	8	154

Clark Public Utilities

CONSTRUCTION STANDARDS

115kV TRANSMISSION
FLAT TOP
795 AAC TO 1557 ACSR/TW

REVISIONS

R	DATE	ENGR	OPS

PAGE: 2 of 2

TFT1,TFT1LC

CAD FILE: TFT1

APP: CM/GM
DATE: 11/19/20

SECTION 1800

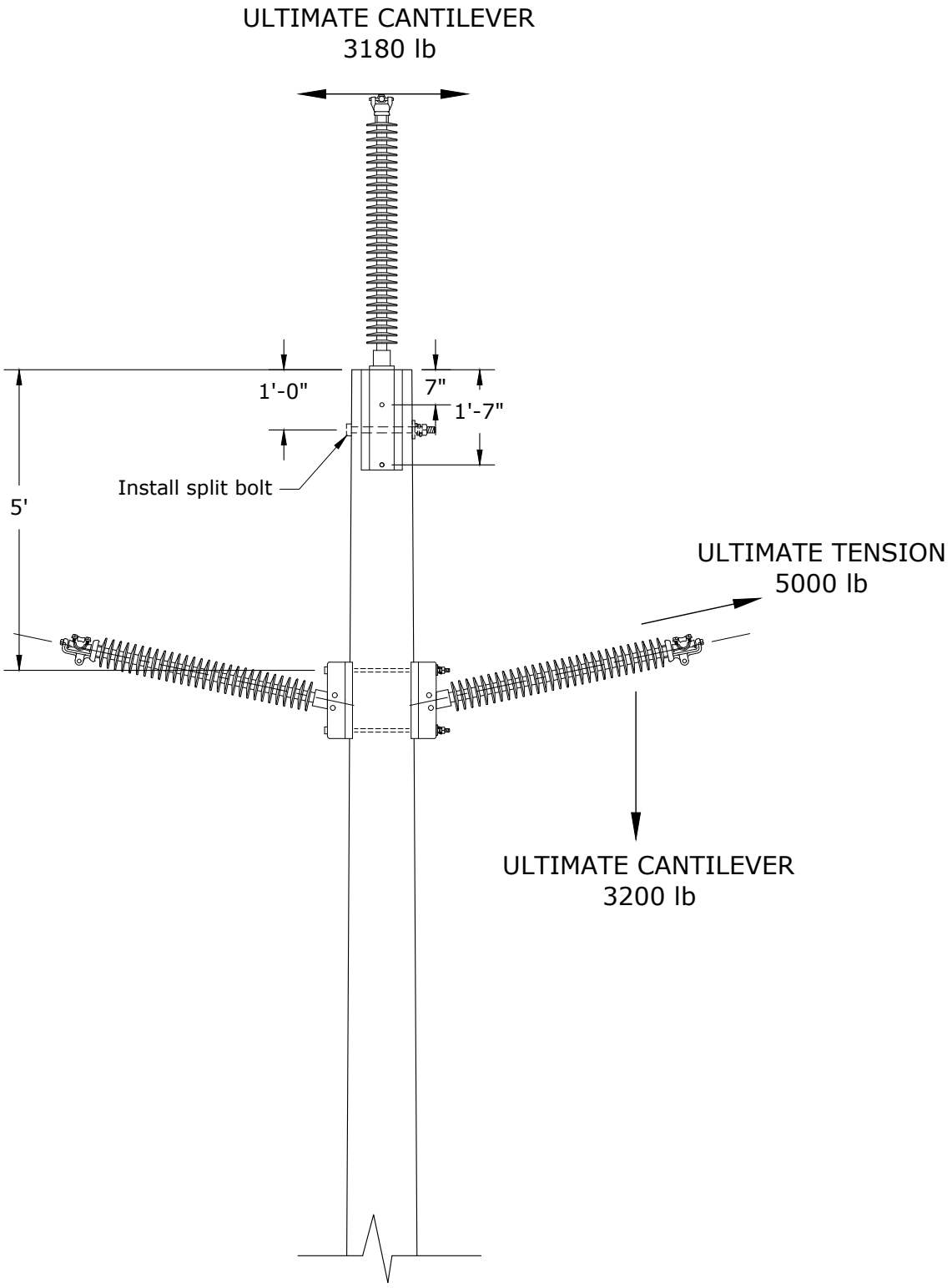

Note: For 336 ACSR and 397 AAC, use Std THPALC.

Rev. 4- Updated spacing to make equilateral distance between transmission cable.

Clark Public Utilities

CONSTRUCTION STANDARDS

115kV TRANSMISSION
TWIGGY FRAMING-0° TO 4°
795 AAC TO 1557 ACSR/TW

PAGE: 1 of 2

THPA,THPALC

CAD FILE: xTHPA

REVISIONS

R	DATE	ENGR	OPS
1	8/23/17	CM	DK
2	5/4/20	JK	
3	12/28/20	KJP	
4	2/11/25	CM	GM

APP: TRO
DATE: 8/96

SECTION 1800

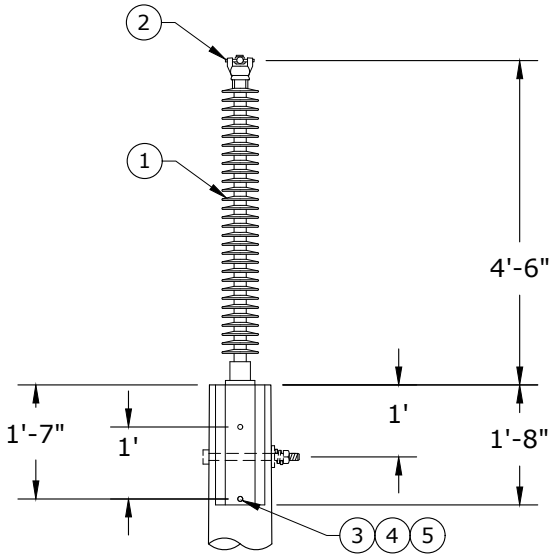

TPR1

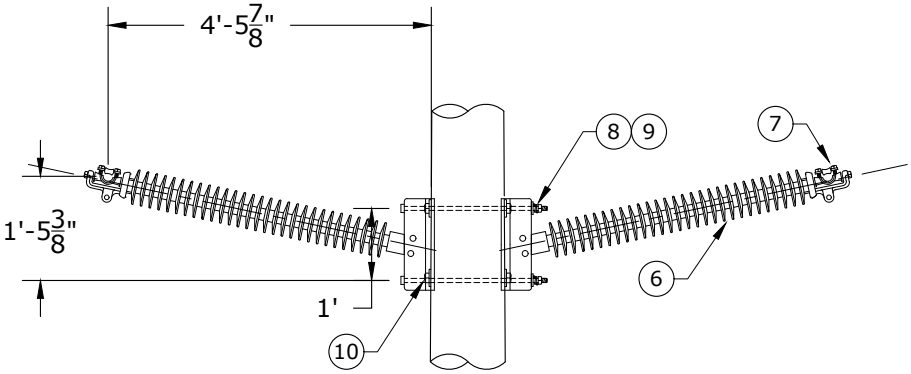

TPR3

Rev. 4- Updated spacing to make equilateral distance between transmission cable.

ITEM NO.	DESCRIPTION	THPA TPR1 QTY.	THPA TPR1 S/N	THPALC TPR1LC QTY.	THPALC TPR1LC S/N
1	Insulator, Line Post Vertical, 115kV, 3180 lb Ultimate Cantilever	1	2345	1	2345
2	Clamp, Clamptop, 795 AAC To 1557 ACSR/TW Bare	1	317	1	316
3	Bolt, Machine, 7/8" x 16", Galv, 25,400 lb Ultimate Tensile	2	1901	2	1901
4	Washer, Curved, Cast, 4" x 6"	2	1911	2	1911
5	Washer, Lock, Spring, Double Coil, Galv, 7/8"	2	2351	2	2351
ITEM NO.	DESCRIPTION	TPR3 QTY.	TPR3 S/N	TPR3LC QTY.	TPR3LC S/N
6	Insulator, Line Post Horizontal, 115kV, 3200 lb Ultimate Cantilever	2	2346	2	2346
7	Clamp, Clamptop, 795 AAC To 1557 ACSR/TW Bare	2	317	2	316
8	Bolt, Double Arm, 7/8" x 26", Galv, 25,400 lb Ultimate Tensile	2	2983	2	2983
9	Washer, Lock, Spring, Double Coil, Galv, 7/8"	4	2351	4	2351
10	Washer, Flat Round, Galv, 7/8"	4	2978	4	2978

Clark Public Utilities

CONSTRUCTION STANDARDS

115kV TRANSMISSION
TWIGGY FRAMING-0° TO 4°
795 AAC TO 1557 ACSR/TW

REVISIONS

R	DATE	ENGR	OPS
1	8/23/17	CM	DK
2	5/4/20	JK	
3	12/28/20	KJP	
4	2/11/25	CM	GM

PAGE: 2 of 2

THPA,THPALC

CAD FILE: THPA

APP: TRO
DATE: 8/96

SECTION 1800

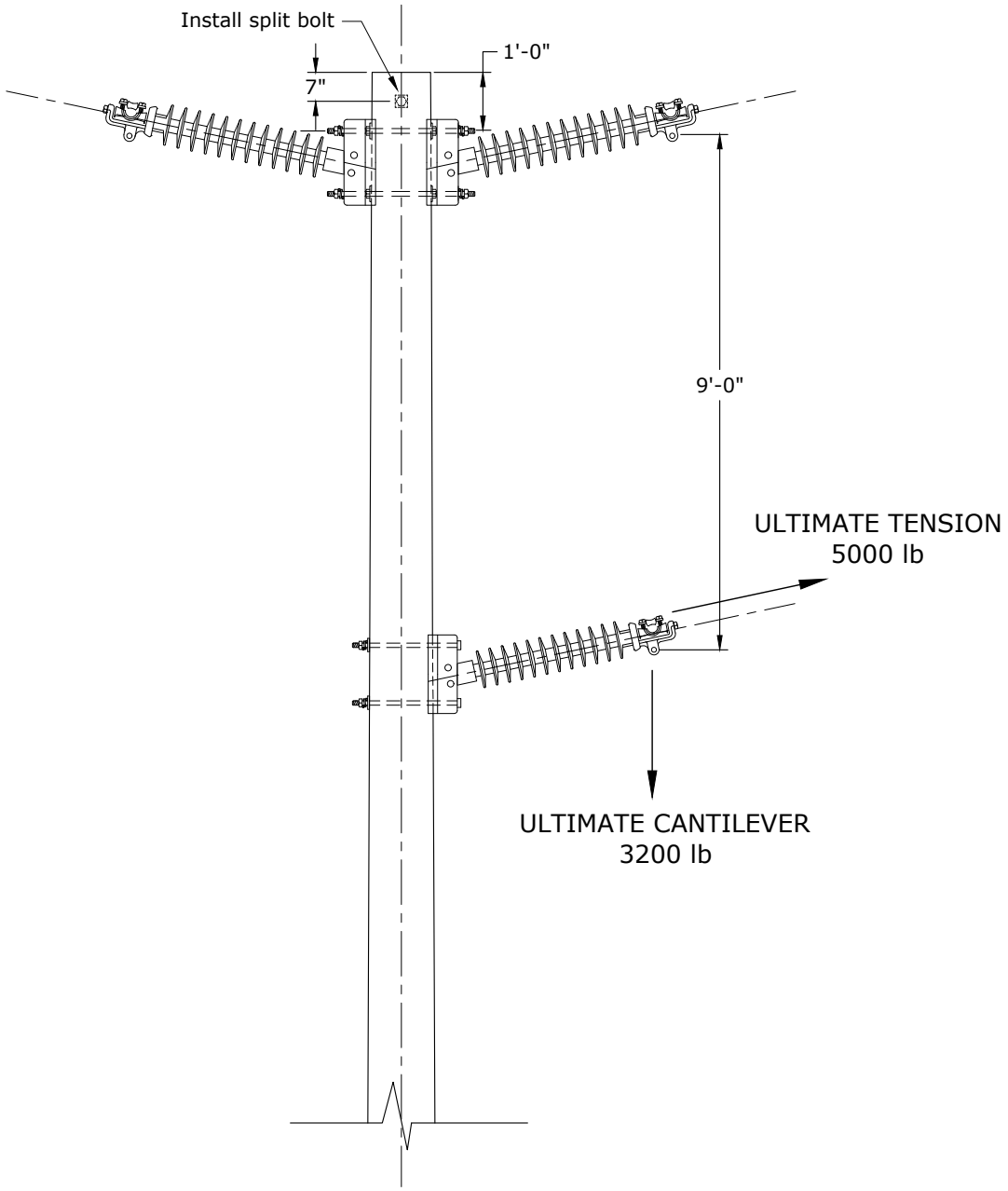

Note: For 336 ACSR and 397 AAC, use Std THPBLC.

Rev. 2 - Changed machine bolts to DA bolts.

Clark Public Utilities

CONSTRUCTION STANDARDS

115kV TRANSMISSION
REVERSE TWIGGY-5° TO 20°
795 AAC TO 1557 ACSR/TW

REVISIONS			
R	DATE	ENGR	OPS
1	5/4/20	JK	
2	12/28/20	KJP	

PAGE: 1 of 2

THPB,THPBLC

CAD FILE: THPB

APP: CM/DK
DATE: 8/23/17

SECTION 1800

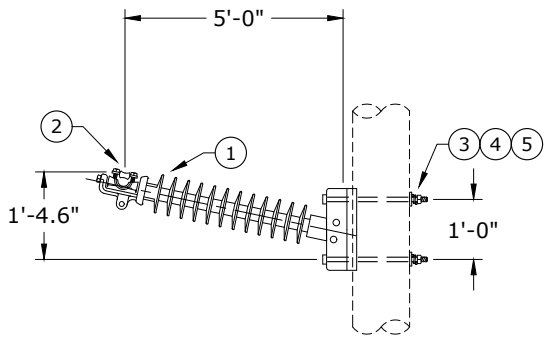

TPR2

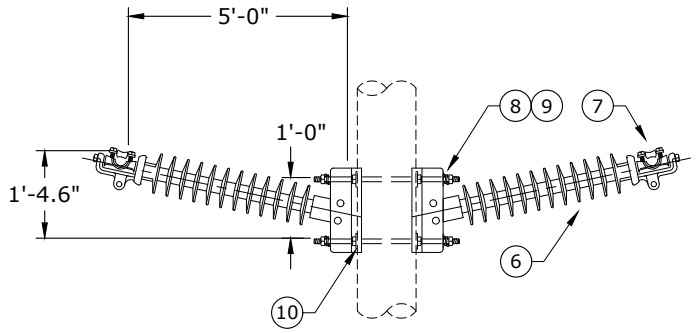

TPR3

Rev. 2 - Changed machine bolts to DA bolts.

ITEM NO.	DESCRIPTION	THPB TPR2 QTY.	THPB TPR2 S/N	THPBLC TPR2LC QTY.	THPBLC TPR2LC S/N
1	Insulator, Line Post Horizontal, 115kV, 3200 lb Ultimate Cantilever	1	2346	1	2346
2	Clamp, Clamptop, 795 AAC To 1557 ACSR/TW Bare	1	317	1	316
3	Bolt, Machine, 7/8" x 16", Galv, 25,400 lb Ultimate Tensile	2	1901	2	1901
4	Washer, Curved, Cast, 4" x 6"	2	1911	2	1911
5	Washer, Lock, Spring, Double Coil, Galv., 7/8"	2	2351	2	2351

ITEM NO.	DESCRIPTION	TPR3 QTY.	TPR3 S/N	TPR3LC QTY.	TPR3LC S/N
6	Insulator, Line Post Horizontal, 115kV, 3200 lb Ultimate Cantilever	2	2346	2	2346
7	Clamp, Clamptop, 795 AAC To 1557 ACSR/TW Bare	2	317	2	316
8	Bolt, Double Arm, 7/8" x 26", Galv, 25,400 lb Ultimate Tensile	2	2983	2	2983
9	Washer, Lock, Spring, Double Coil, Galv, 7/8"	4	2351	4	2351
10	Washer, Flat Round, Galv, 7/8"	4	2978	4	2978

Clark Public Utilities

CONSTRUCTION STANDARDS

115kV TRANSMISSION
REVERSE TWIGGY-5° TO 20°
795 AAC TO 1557 ACSR/TW

REVISIONS

R	DATE	ENGR	OPS
1	5/4/20	JK	
2	12/28/20	KJP	

PAGE: 2 of 2

THPB,THPBLC

CAD FILE: THPB

APP: CM/DK
DATE: 8/23/17

SECTION 1800

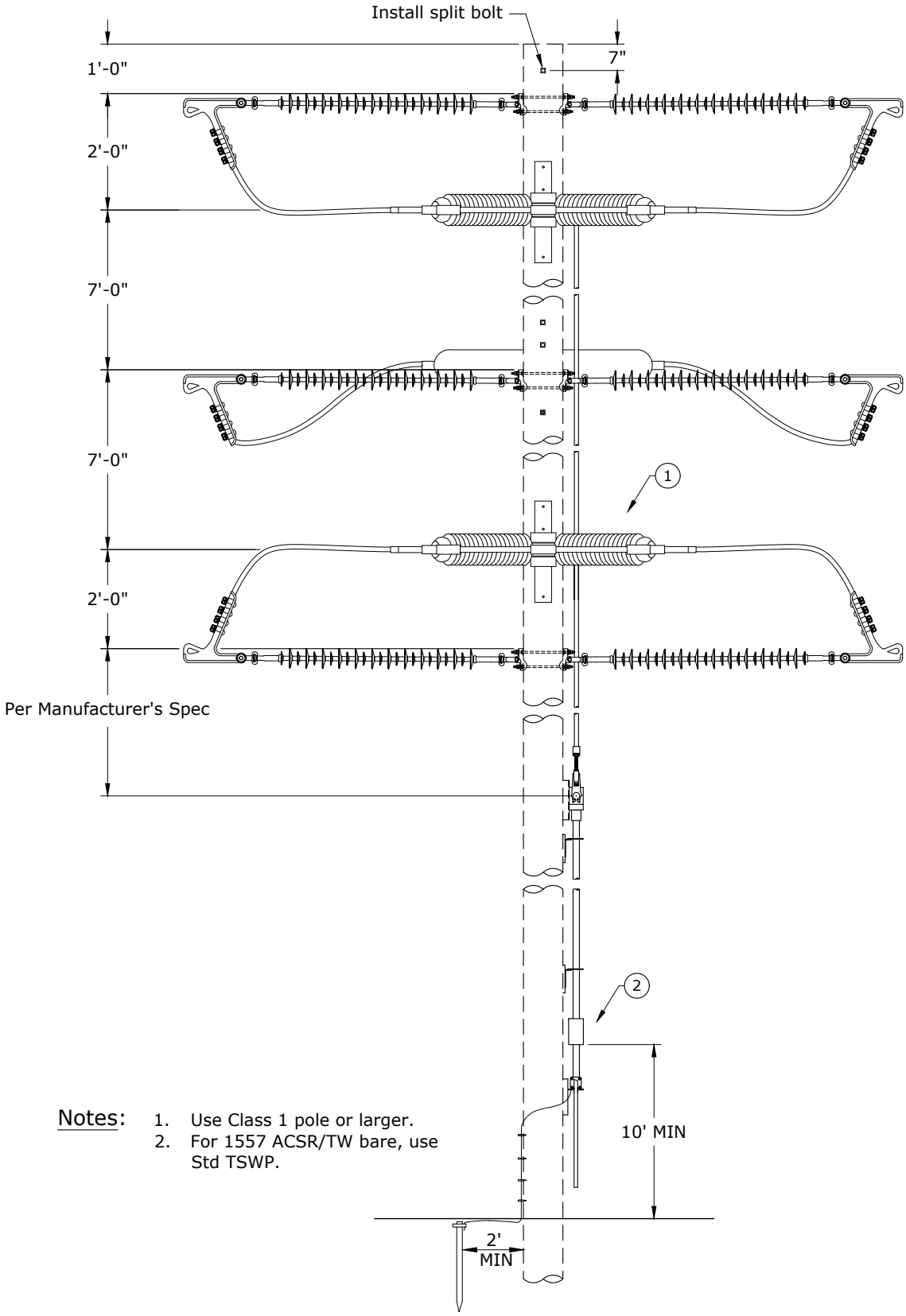

Notes:

1. Use Class 1 pole or larger.
2. For 1557 ACSR/TW bare, use Std TSWP.

Rev. 5 - Changed machine bolts to DA bolts.

Clark Public Utilities

CONSTRUCTION STANDARDS

115kV TRANSMISSION
OPPOSING PHASE VERTICAL SWITCH
336 ACSR TO 900 ACSR

REVISIONS

R	DATE	ENGR	OPS
2	3/24/72	RHJ	
3	11/7/73	CMK	
4	8/23/17	DK	
5	12/29/20	KJP	

PAGE: 1 of 2

TSW,TSWP

CAD FILE: TSW

APP: PS/RY

DATE: 2/66

SECTION 1800

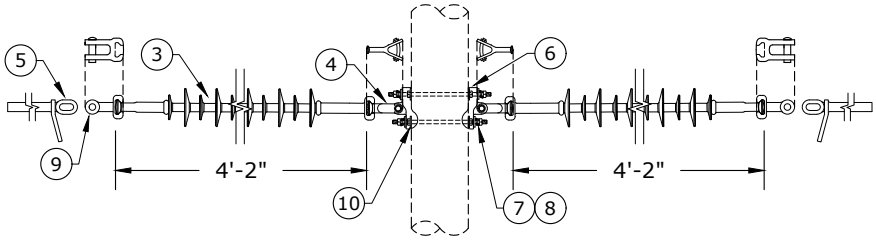

TPR6P

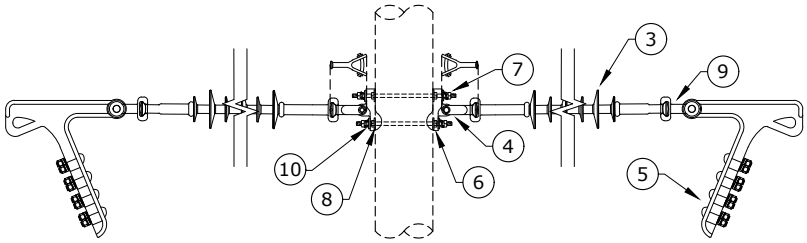

TPR6

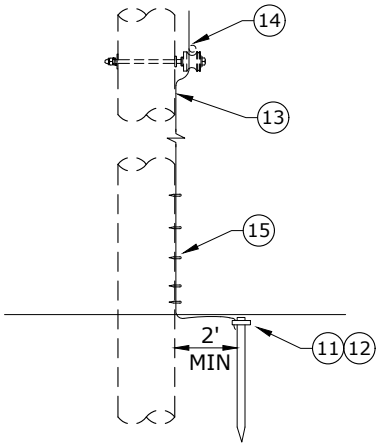

N1

Rev. 5 - Changed machine bolts to DA bolts.

ITEM NO.	DESCRIPTION	TSW SWITCH QTY	TSW SWITCH S/N	TSWP SWITCH QTY	TSWP SWITCH S/N
1	Switch, AB Vert. 1200A 115kV, Phase Over Phase	1	1273	1	1273
2	Insulator, Control Rod, 2" IPS	1	2989	1	2989
ITEM NO.	DESCRIPTION	TPR6 (3) QTY	TPR6 (3) S/N	TPR6P (3) QTY	TPR6P (3) S/N
3	Insulator, Suspension, Polymer, 115kV, 30,000 lb Ultimate	6	2350	6	2350
4	Clevis, Y-Ball, 30,000 lb Ultimate	6	320	6	320
5	Clamp, Strain/ Deadend, Compression	6	2467	6	2421
6	Plate, Pole Eye, 36,000 lb Ultimate	6	1908	6	1908
7	Bolt, Double Arm, 7/8" x 20", Galv., 25,400 lb Ultimate	6	2980	6	2980
8	Washer, Lock, Spring, Double Coil, Galv, 7/8"	12	2351	12	2351
9	Socket/Eye, 13/16" Eye, 1" Wide Base/ Clevis, Socket	6	1681	6	333
10	Washer, Flat Round Galv, 7/8"	12	2978	12	2978
ITEM NO.	DESCRIPTION	N1 QTY	N1 S/N	N1 QTY	N1 S/N
11	Rod, Ground, 5/8" x 8'	1	1124	1	1124
12	Clamp, Ground Rod, 5/8", Small, Bronze	1	281	1	281
13	Conductor, Copper-Clad Steel, #4 Cu Equivalent	36	1512	36	1512
14	Connector, H-Tap, Al/Cu, Run #2-2/0 Str - Tap #6-#1 Str	1	413	1	413
15	Staple, Ground Wire, Barbed, Galv, 1 1/2"	24	2707	24	2707

Clark Public Utilities

CONSTRUCTION STANDARDS

115kV TRANSMISSION
OPPOSING PHASE VERTICAL SWITCH
336 ACSR TO 900 ACSR

REVISIONS

R	DATE	ENGR	OPS
2	3/24/72	RHJ	
3	11/7/73	CMK	DK
4	8/23/17	DK	
5	12/29/20	KJP	

PAGE: 2 of 2

TSW,TSWP

CAD FILE: TSW

APP: PS/RY
DATE: 2/66

SECTION 1800

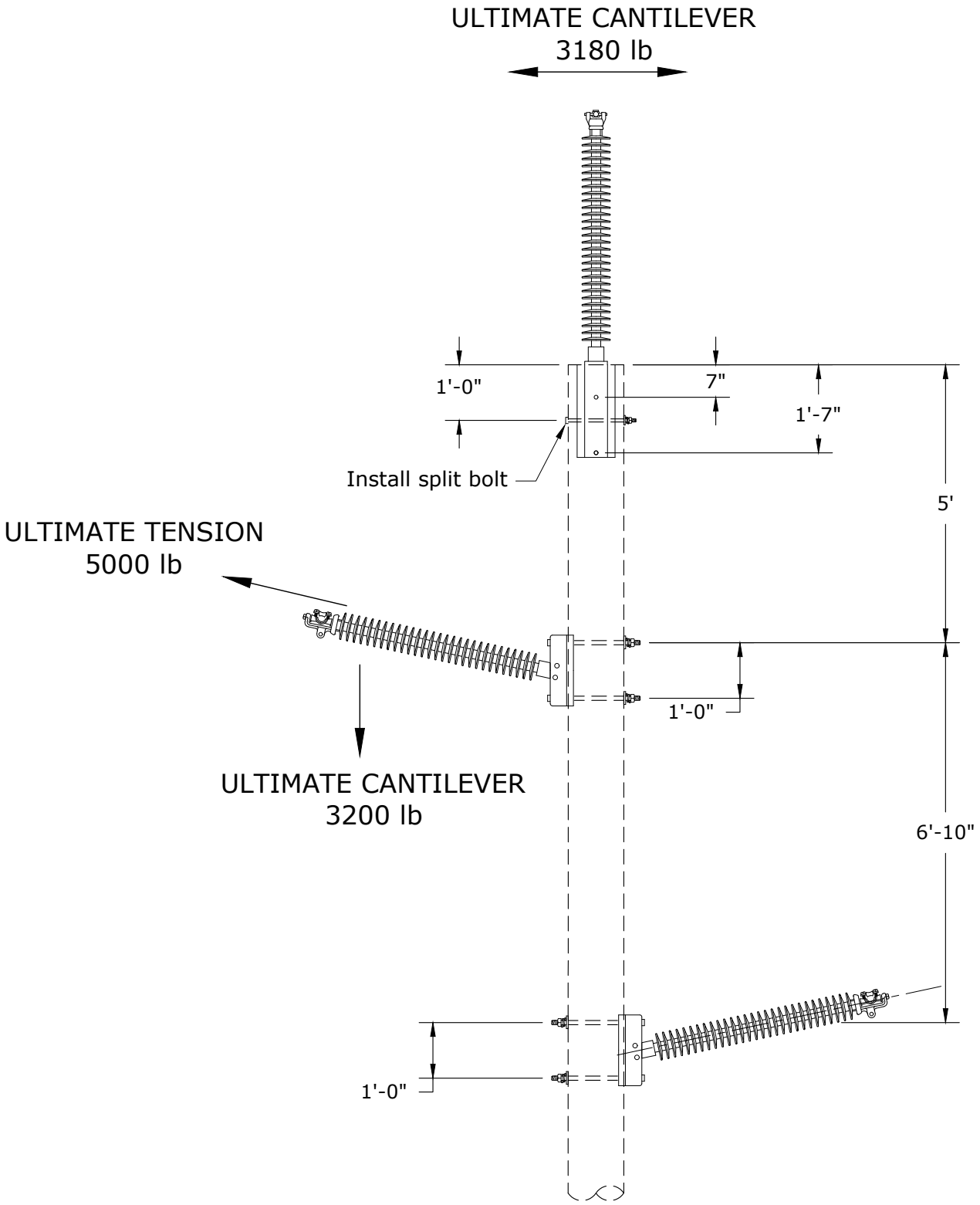

Note: For 336 ACSR and 397 AAC, use Std TV21LC.

Rev. 3- Updated spacing to make equilateral distance between transmission cable.

Clark Public Utilities

CONSTRUCTION STANDARDS

115kV TRANSMISSION
OPPOSING PHASE W/ POST TOP
795 AAC TO 1557 ACSR/TW

REVISIONS

R	DATE	ENGR	OPS
0	8/01	REDRAWN	IN CAD
1	8/23/17	CM	DK
2	5/4/20	JK	
3	2/11/25	CM	GM

PAGE: 1 of 2

TV21,TV21LC

CAD FILE: xTV21

APP:

DATE: 2/68

SECTION 1800

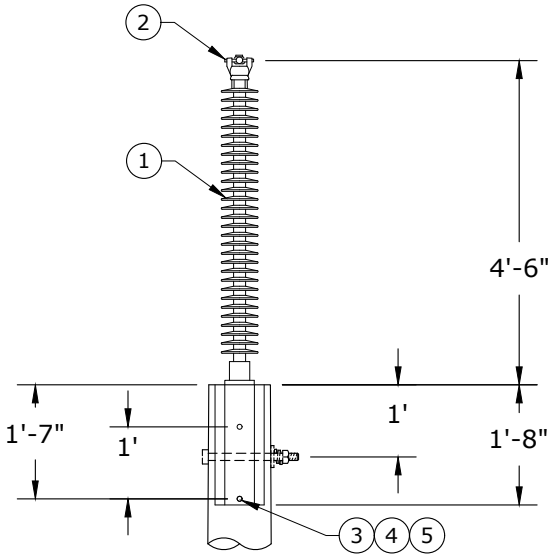

TPR1

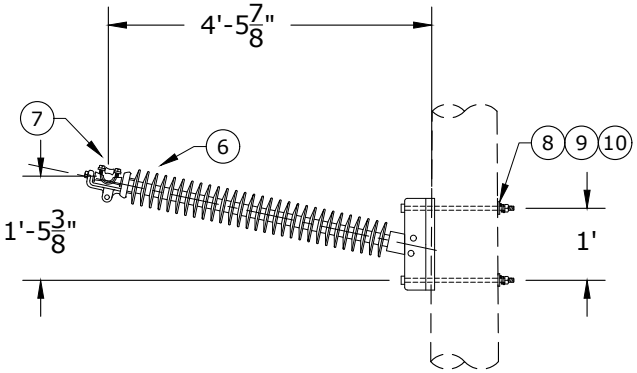

TPR2

Rev. 3- Updated spacing to make equilateral distance between transmission cable.

ITEM NO.	DESCRIPTION	TV21 TPR1 QTY.	TV21 TPR1 S/N	TV21LC✲ TPR1LC QTY.	TV21LC✲ TPR1LC S/N
1	Insulator, Line Post Vertical, 115kV, 3180 lb Ultimate Cantilever	1	2345	1	2345
2	Clamp, Clamptop, 795 AAC To 1557 ACSR/TW Bare	1	317	1	316
3	Bolt, Machine, 7/8" x 16", Galv., 25,400 lb Ultimate Tensile	2	1901	2	1901
4	Washer, Curved, Cast, 4" x 6"	2	1911	2	1911
5	Washer, Lock, Spring, Double Coil, Galv., 7/8"	2	2351	2	2351

ITEM NO.	DESCRIPTION	TPR2 (2) QTY.	TPR2 (2) S/N	TPR2LC (2) QTY.	TPR2LC (2) S/N
6	Insulator, Line Post Horizontal, 115kV, 3200 lb Ultimate Cantilever	2	2346	2	2346
7	Clamp, Clamptop, 795 AAC To 1557 ACSR/TW Bare	2	317	2	316
8	Bolt, Machine, 7/8" x 16", Galv., 25,400 lb Ultimate Tensile	4	1901	4	1901
9	Washer, Curved, Cast, 4" x 6"	4	1911	4	1911
10	Washer, Lock, Spring, Double Coil, Galv., 7/8"	4	2351	4	2351

Clark Public Utilities

CONSTRUCTION STANDARDS

115kV TRANSMISSION
OPOOSING PHASE W/ POST TOP
795 AAC TO 1557 ACSR/TW

REVISIONS

R	DATE	ENGR	OPS
0	8/01	REDRAWN	IN CAD
1	8/23/17	CM	DK
2	5/4/20	JK	
3	2/11/25	CM	GM

PAGE: 2 of 2

TV21,TV21LC

CAD FILE: TV21

APP:

DATE: 2/68

SECTION 1800

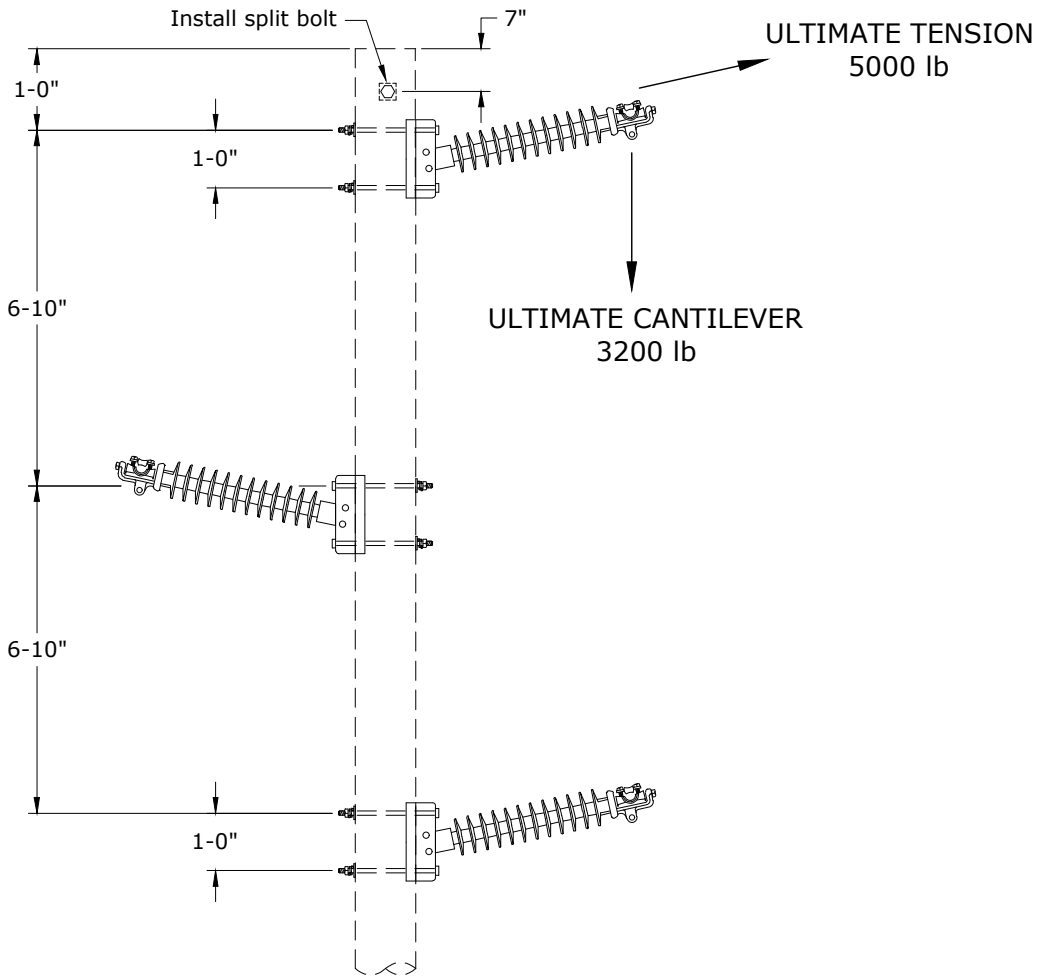

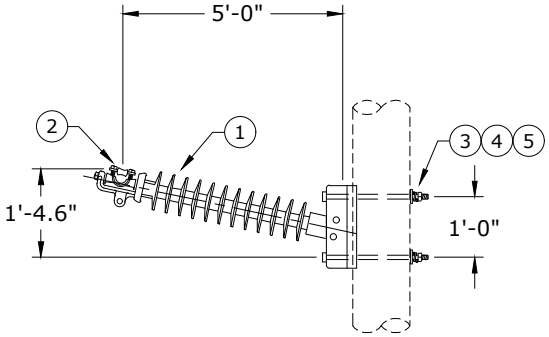

TPR2

Note: For 336 ACSR and 397 AAC, use Std TC22LC.

Rev. 2- Updated Ultimate Cantilever rating.

ITEM NO.	DESCRIPTION	TV22 TPR2 (3) QTY.	TV22 TPR2 (3) S/N	TV22LC TPR2LC (3) QTY.	TV22LC TPR2LC (3) S/N
1	Insulator, Line Post Horizontal, 115kV, 3200 lb Ultimate Cantilever	3	2346	3	2346
2	Clamp, Clamptop, 795 AAC To 1557 ACSR/TW Bare	3	317	3	316
3	Bolt, Machine, 7/8" x 16", Galv., 25,400 lb Ultimate Tensile	6	1901	6	1901
4	Washer, Curved, Cast, 4" x 6"	6	1911	6	1911
5	Washer, Lock, Spring, Double Coil, Galv., 7/8"	6	2351	6	2351

Clark Public Utilities

CONSTRUCTION STANDARDS

115kV TRANSMISSION
OPPOSING PHASE-0° TO 4°
795 AAC TO 1557 ACSR/TW

REVISIONS

R	DATE	ENGR	OPS
0	8/01	REDRAWN	IN CAD
1	8/23/17	CM	DK
2	5/4/20	JK	

PAGE: 1 of 1

TV22,TV22LC

CAD FILE: TV22

APP:

DATE: 1/77

SECTION 1800

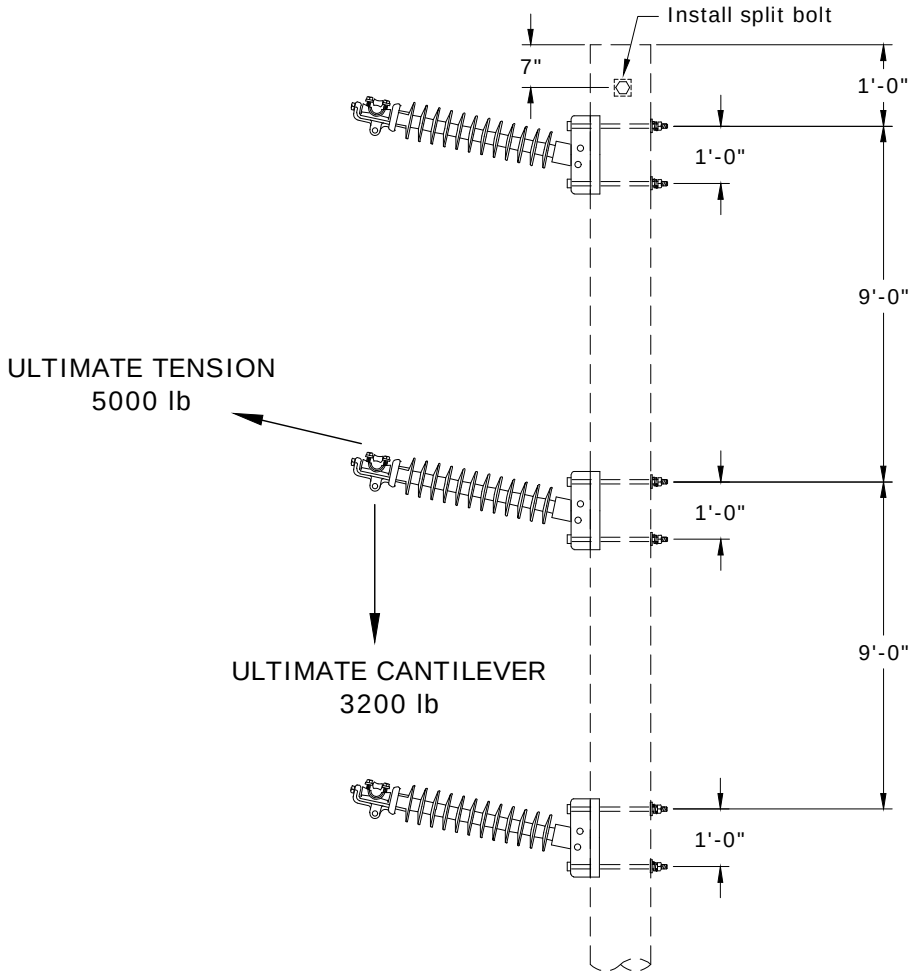

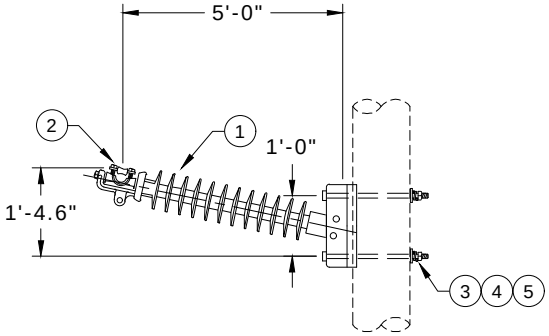

TPR2

Note: For 336 ACSR and 397 AAC, use Std TV23LC.

Rev. 2- Updated Ultimate Cantilever rating.

ITEM NO.	DESCRIPTION	TV23 TPR2 (3) QTY.	TV23 TPR2 (3) S/N	TV23LC TPR2LC (3) QTY.	TV23LC TPR2LC (3) S/N
1	Insulator, Line Post Horizontal, 115kV, 3200 lb Ultimate Cantilever	3	2346	3	2346
2	Clamp, Clamptop, 795 AAC To 1557 ACSR/TW Bare	3	317	3	316
3	Bolt, Machine, 7/8" x 16", Galv., 25,400 lb Ultimate Tensile	6	1901	6	1901
4	Washer, Curved, Cast, 4" x 6"	6	1911	6	1911
5	Washer, Lock, Spring, Double Coil, Galv., 7/8"	6	2351	6	2351

Clark Public Utilities

CONSTRUCTION STANDARDS

115kV TRANSMISSION
VERTICAL-0° TO 10°
795 AAC TO 1557 ACSR/TW

REVISIONS

R	DATE	ENGR	OPS
0	8/01	REDRAWN	IN CAD
1	8/23/17	CM	DK
2	5/4/20	JK	

PAGE: 1 of 1

TV23,TV23LC

CAD FILE: TV23

APP:

DATE: 8/5/66

SECTION 1800

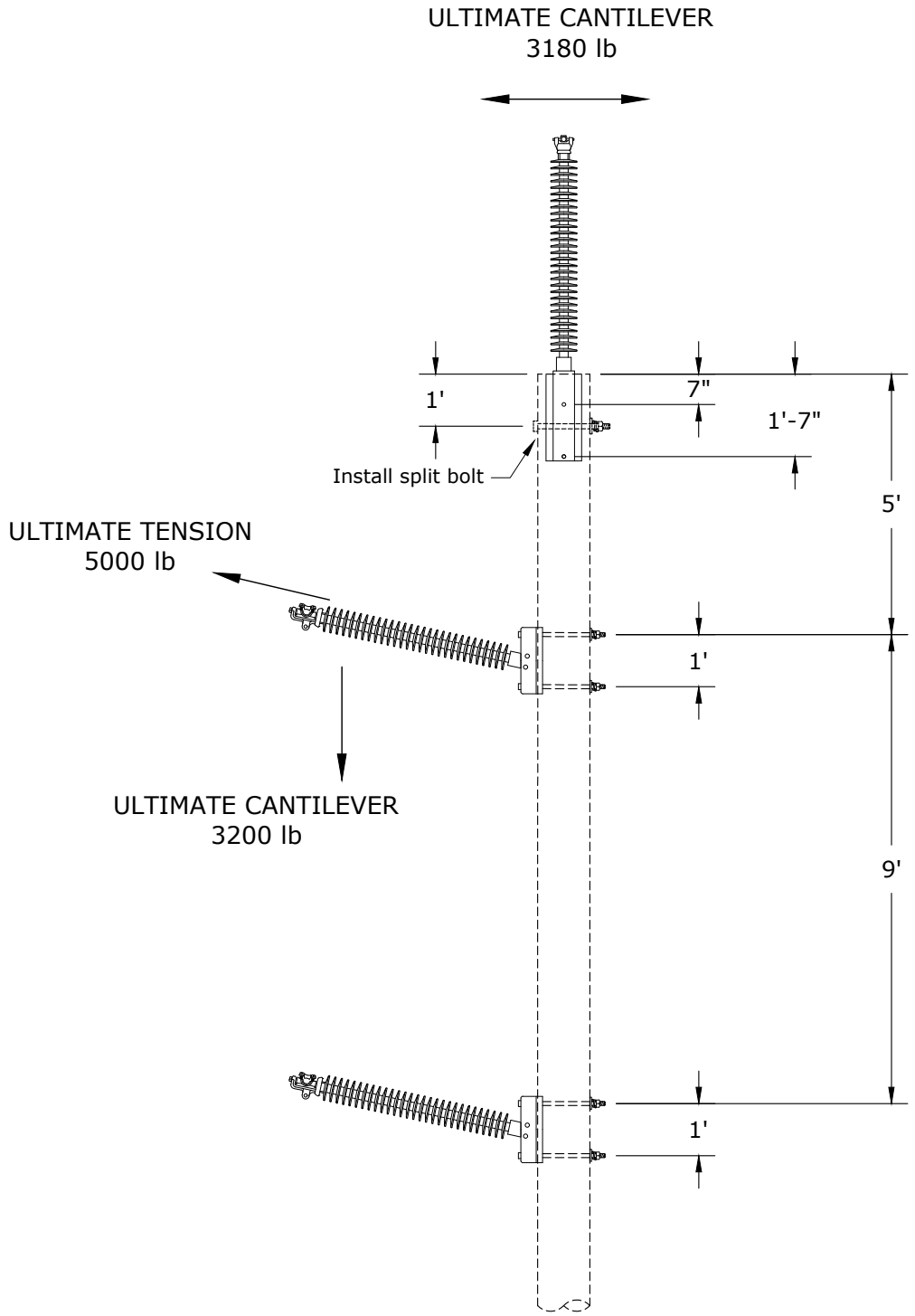

Note: For 336 ACSR and 397 AAC, use Std TV24LC.

Rev. 3- Updated spacing to make equilateral distance between transmission cable.

Clark Public Utilities

CONSTRUCTION STANDARDS

115kV TRANSMISSION
VERTICAL W/ POST TOP
795 AAC TO 1557 ACSR/TW

REVISIONS

R	DATE	ENGR	OPS
0	8/01	REDRAWN	IN CAD
1	8/23/17	CM	DK
2	5/4/20	JK	
3	2/11/25	CM	GM

PAGE: 1 of 2

TV24,TV24LC

CAD FILE: xTV24

APP:

DATE: 2/66

SECTION 1800

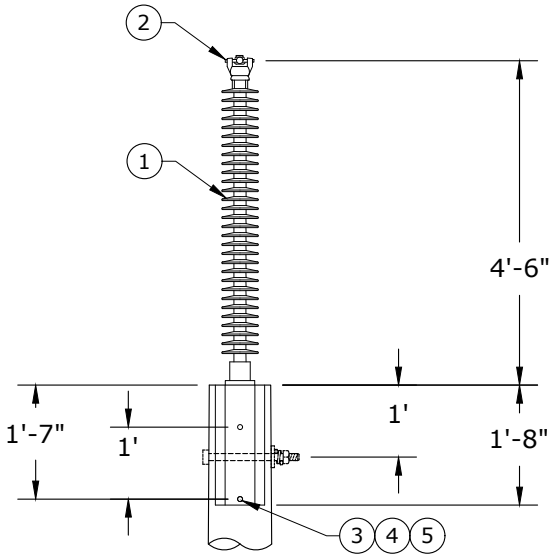

TPR1

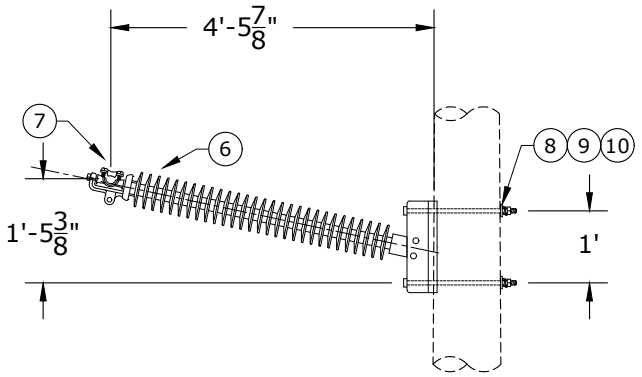

TPR2

Rev. 3- Updated spacing to make equilateral distance between transmission cable.

ITEM NO.	DESCRIPTION	TV24 TPR1 QTY.	TV24 TPR1 S/N	TV24LC TPR1LC QTY.	TV24LC TPR1LC S/N
1	Insulator, Line Post Vertical, 115kV, 3180 lb Ultimate Cantilever	1	2345	1	2345
2	Clamp, Clamptop, 795 AAC To 1557 ACSR/TW Bare	1	317	1	316
3	Bolt, Machine, 7/8" x 16", Galv., 25,400 lb Ultimate Tensile	2	1901	2	1901
4	Washer, Curved, Cast, 4" x 6"	2	1911	2	1911
5	Washer, Lock, Spring, Double Coil, Galv., 7/8"	2	2351	2	2351
ITEM NO.	**DESCRIPTION**	**TPR2 (2) QTY.**	**TPR2 (2) S/N**	**TPR2LC (2) QTY.**	**TPR2LC (2) S/N**
6	Insulator, Line Post Horizontal, 115kV, 3200 lb Ultimate Cantilever	2	2346	2	2346
7	Clamp, Clamptop, 795 AAC To 1557 ACSR/TW Bare	2	317	2	316
8	Bolt, Machine, 7/8" x 16", Galv., 25,400 lb Ultimate Tensile	4	1901	4	1901
9	Washer, Curved, Cast, 4" x 6"	4	1911	4	1911
10	Washer, Lock, Spring, Double Coil, Galv., 7/8"	4	2351	4	2351

Clark Public Utilities

CONSTRUCTION STANDARDS

115kV TRANSMISSION
VERTICAL W/ POST TOP
795 AAC TO 1557 ACSR/TW

REVISIONS

R	DATE	ENGR	OPS
0	8/01	REDRAWN	IN CAD
1	8/23/17	CM	DK
2	5/4/20	JK	
3	2/11/25	CM	GM

PAGE: 2 of 2

TV24,TV24LC

CAD FILE: TV24

APP:

DATE: 2/66

SECTION 1800

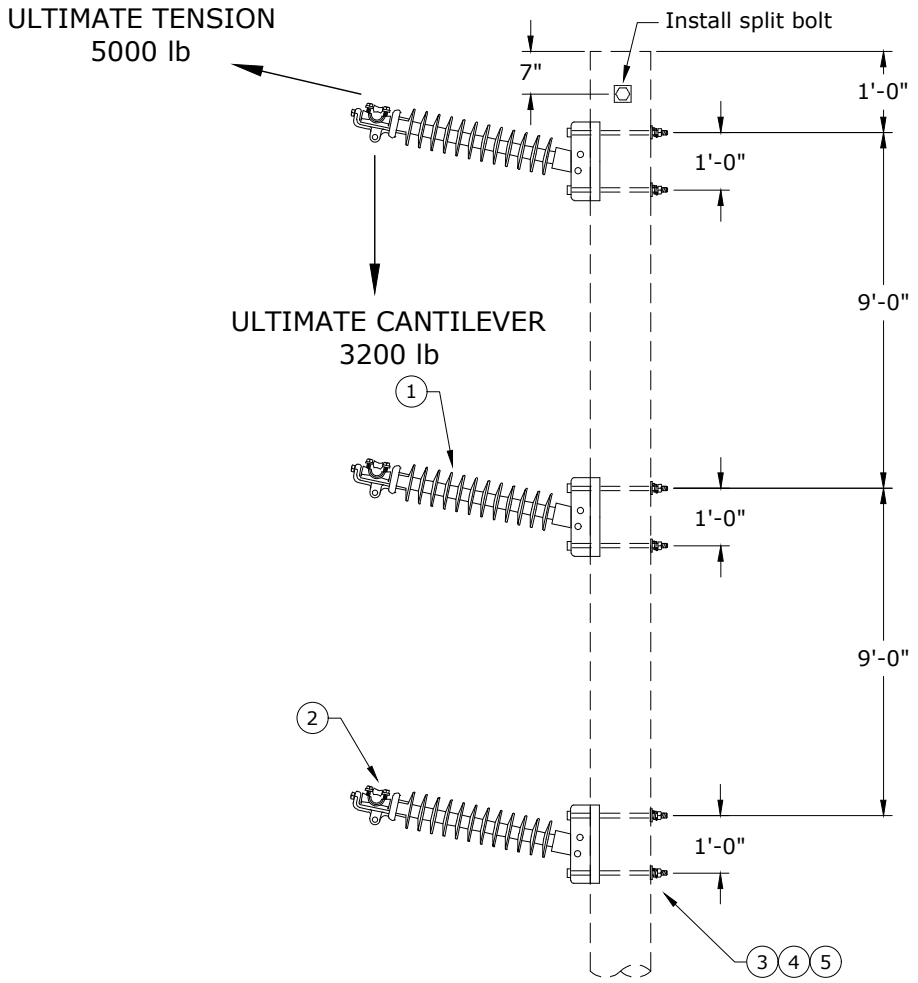

Rev. 1 - Updated Ultimate Cantilever rating.

ITEM NO.	DESCRIPTION	TV25 QTY.	TV25 S/N
1	Insulator, Line Post Horizontal, 115kV, 3200 lb Ultimate Cantilever	3	2346
2	Clamp, Strain, 336 ACSR to 1557 ACSR/TW	3	2467
3	Bolt, Machine, 7/8" x 16", Galv., 25,400 Ultimate Tensile	6	1901
4	Washer, Curved, Cast, 4" x 6"	6	1911
5	Washer, Lock, Spring, Double Coil, Galv., 7/8"	6	2351

Clark Public Utilities

CONSTRUCTION STANDARDS

115kV TRANSMISSION
VERTICAL-11° TO 30°
336 ACSR TO 1557 ACSR/TW

REVISIONS

R	DATE	ENGR	OPS
1	5/4/20	JK	

PAGE: 1 of 1

TV25

CAD FILE: TV25

APP: CM/DK
DATE: 8/23/17

SECTION 1800

1910
JOINT USE

2/11/2025

~	JU1	Joint Use Labeling
~	JU2	Joint Use Pole Attachment Guidelines
~	JU3	Joint Use Temporary (30 Day) Attachment
C	JU4	Joint Use Guidelines for Communication Antenna Attachments

N New Standard
R Redrawn Standard
C Changed Standard
~ No Change

STANDARD UTILITY POLE
ATTACHMENTS
(Typical Pole Details, Not to Scale)

1. Identification of attachments is necessary to assist in repair of third party or storm damage to cables, equipment cabinets, conduit and other pole attachments.

2. Nothing herein shall be construed so as to require CPU to tag or label any electrical distribution circuit or facilities. The tagging requirement for CPU pertains to fiber optic and other communications facilities.

3. Tags shall be applied to each attachment on every pole. A separate tag shall be attached to each fiberglass crossarm by the communications company that installed it.

4. Tag shall be securely attached and clearly visible from the ground.

5. Acceptable tags are Tech Products "Everlast" 1-inch tags with type ELHY numbers and PH 103 holder or Almetek Series 1001 E-Z tags with type UE-H 1-inch black numbers on yellow background with TH-3P holder or equivalent approved by CPU.

6. Tags shall be applied on all new construction and whenever work is being done on existing plant.

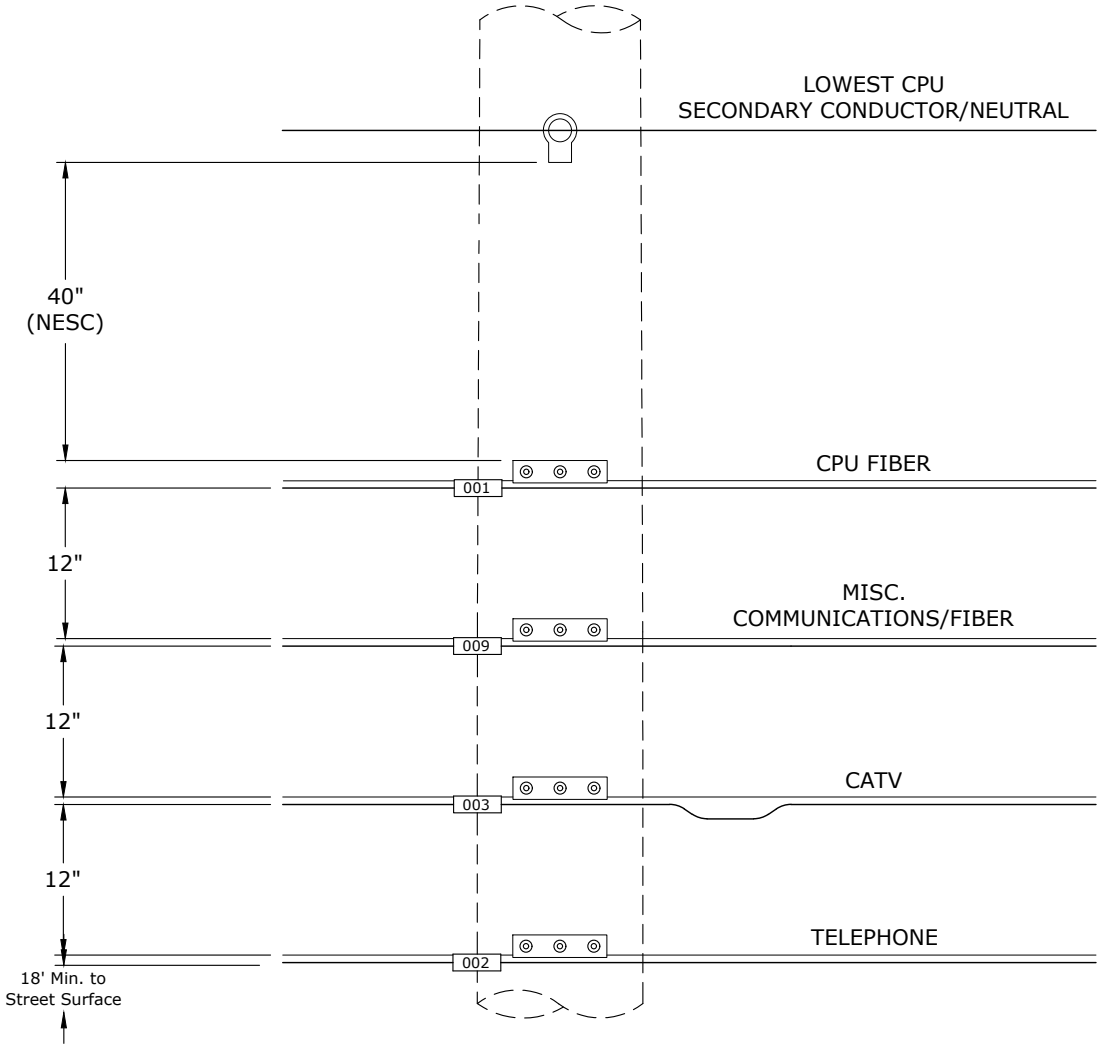

Rev. 15 - Added 027 Zing Broadband.

Clark Public Utilities

CONSTRUCTION STANDARDS

JOINT USE
JOINT USE LABELING

REVISIONS

R	DATE	ENGR	OPS
12	7/21/20	JDK	
13	12/1/21	DRK	
14	12/15/22	DRK	
15	11/6/23	DRK	

PAGE: 1 of 2

JU1

CAD FILE: JU1

APP: KJP
DATE: 12/02/03

SECTION 1910

Standard Utility Pole Attachment Identification Codes

001	Clark Public Utilities Fiber
002	(Was Qwest before bought out by CenturyLink)
003	Comcast
004	Ziply Fiber
005	TDS Telecom
006	Lumen
007	NocTel Communications
008	Structured Cabling
009	ZAYO
010	Lumen National
011	Clark County Information Services
012	WSDOT
013	City Of Vancouver
014	Wave/Astound
015	City of Battleground
016	City of Ridgefield
017	Eman Networks (out of business)
018	City of Camas
019	NoaNet
020	Silver Star Telecom
021	Wave/Astound
022	MCIMETRO
023	Port of Ridgefield
024	AT&T
025	Ridgefield School District
026	La Center School District
027	Zing Broadband

Rev. 15 - Added 027 Zing Broadband.

1. Reference Standards

All clearances between conductors and climbing/working space requirements and construction shall meet the minimum requirements of the latest editions of the Washington Administrative Code (WAC) 296 or the National Electrical Safety Code (NESC) whichever is greater.

2. Definitions

CPU - Clark Public Utilities

Joint Ownership - Refers to poles which are jointly owned by CPU and CenturyLink.

Third Party - Any communication company (except CenturyLink) that attaches to a CPU/CenturyLink jointly-owned pole.

Supply Space - The vertical space on a pole that is occupied by the electric supply conductors and/or hardware. The bottom of the supply space is the bottom of the lowest supply-owned equipment.

Communications Space - The vertical space on a pole below the 40-inch separation space which is occupied by communication lines (as defined by the NESC, communication lines include, but are not limited to, telephone, CATV, and fiber optic lines).

Communication Worker Safety Zone - The vertical space (40 inches per NESC 235C4) on a pole separating the supply space and the communications space. This space is intended to provide a safe working clearance for workers in the communication space.

Pole Face - The side or half of the pole that contains the pole gain.

Pole Gain - The notch in the pole that contains the pole manufacturing information. The pole gain is located 10 feet from the butt of the pole.

3. General Attachment Requirements

3.1. Laminated Poles

Attachment to laminated poles must be approved by CPU Engineering to ensure the pole is strong enough for the additional load.

3.2. Cables and Guys

Communication lines shall be attached to the same side of the pole as the power neutral conductor. If the power neutral conductor is on a primary crossarm, communication cables shall be installed on the road side of the pole (See Figure 3.1).

Communication lines shall be tensioned or guyed in a way that does not alter the angle of existing structures or change the sag characteristics of power conductors.

Communication companies must provide their own anchor. Anchors must be a minimum of 5 feet apart. The communication anchor shall be between the pole and the CPU anchor. ✲ If the 5 foot spacing is not possible, or a sidewalk guy is needed, the communication company will contact CPU for an engineering review of the anchor strength. If there is sufficient strength, permission will be given to the communication company to attach to the CPU anchor.

All guys shall have strain insulators and yellow guy markers installed.

3.3. Pole Drilling

Field drilled pole holes shall be treated with CPU-approved wood preservative.

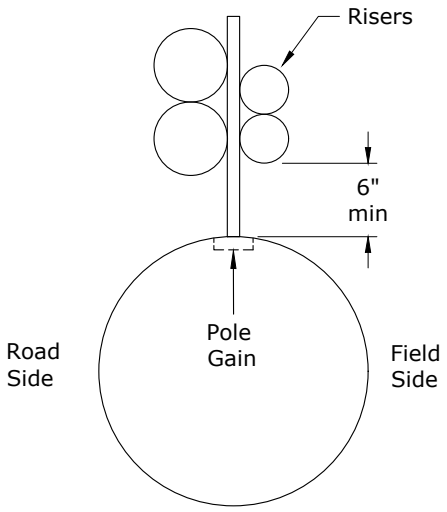

Figure 3.1

Rev. 3 - Added language that comm anchor shall be between pole & CPU anchor, and restricting comm risers on switch poles.

3.4. Equipment Mounting

Through bolt ends shall not protrude more than two inches beyond the nut on the other side of the pole. Attachments to steel poles shall be banded. Galvanized surfaces damaged during attachment shall be recoated.

3.5. Risers

Communication cables transitioning from overhead to underground shall be mounted in riser conduits. Conduit must be a minimum of schedule 40 PVC and shall be gray. Risers shall not be installed on poles with distribution or transmission switches.✲

Communication risers shall be installed on the pole face (see Figure 3.1). All risers shall be installed in conduit and mounted on 10 ½ inch standoff brackets to provide a minimum 6 inch clearance from the pole. Existing standoff brackets shall be used when available. If new brackets are needed, the communications company shall provide and install brackets as approved by CPU. The lower most bracket shall be no lower than 8 feet above ground line. The top bracket shall be 6" below the top of the riser. The middle bracket shall be halfway between the top and bottom bracket (see Figure 3.2).

The 40" communication worker safety space must be maintained between the lowest exposed secondary (including drip loops or the top of the conduit) and the highest communication attachment (see Figure 3.3). Contact CPU Engineering regarding source and riser for communication power supplies.

3.6. Enclosures

Communication enclosures and power supplies shall not be mounted on any CPU pole or installed within 6 feet of the pole.

3.7. Grounding

Conductive communications messengers shall be bonded when CPU pole grounds are present. The pole ground shall not be cut or damaged when connecting communication company grounds. If a CPU pole ground is not present, the communication company will run its own pole ground and install its own ground rod.

3.8. Decorative Object Attachments

All decorative object attachments, such as banners, hanging flower baskets or Christmas lights, require CPU approval.

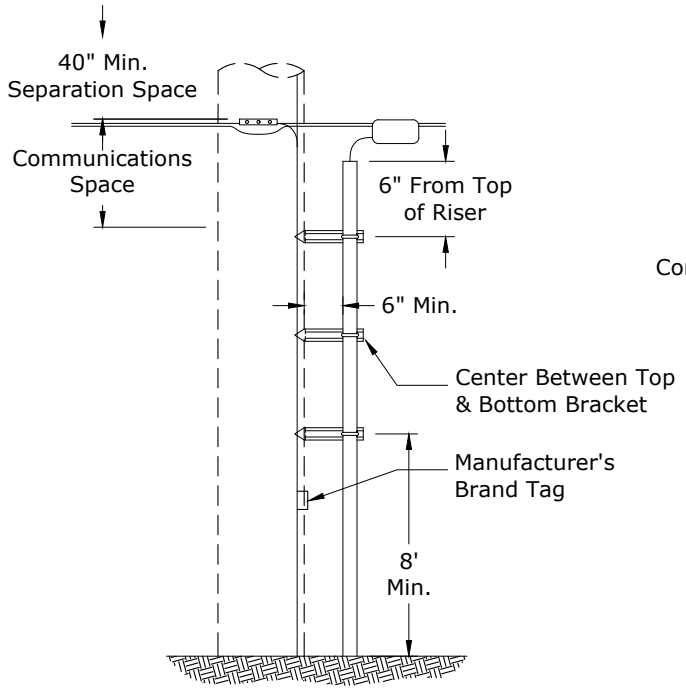

Figure 3.2

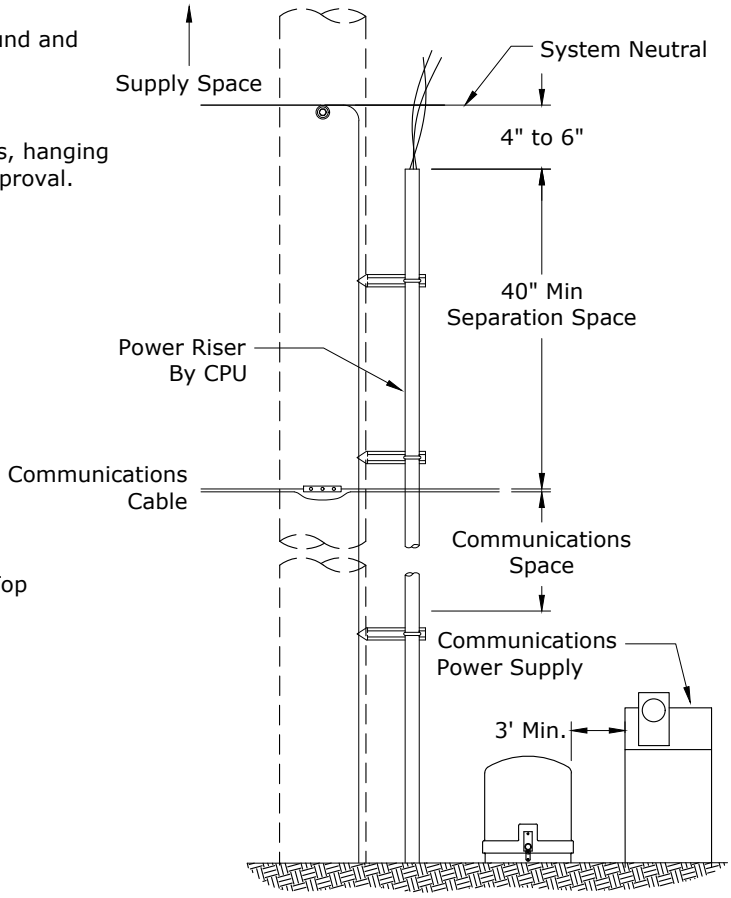

Figure 3.3

Rev. 3 - Added language that comm anchor shall be between pole & CPU anchor, and restricting comm risers on switch poles.

4. Clearance Requirements

4.1. Distribution Clearances at Supports

A minimum clearance of 40 inches must be maintained between the bottom of the supply space and the top of the communication space. The supply space begins at the bottom of the lowest piece of supply equipment. Supply equipment includes, but is not limited to, neutral and secondary clevises, bare and insulated secondary wires (except for streetlight wire drip loops), guy hardware and equipment platforms (see Figure 4.1 - Figure 4.4).

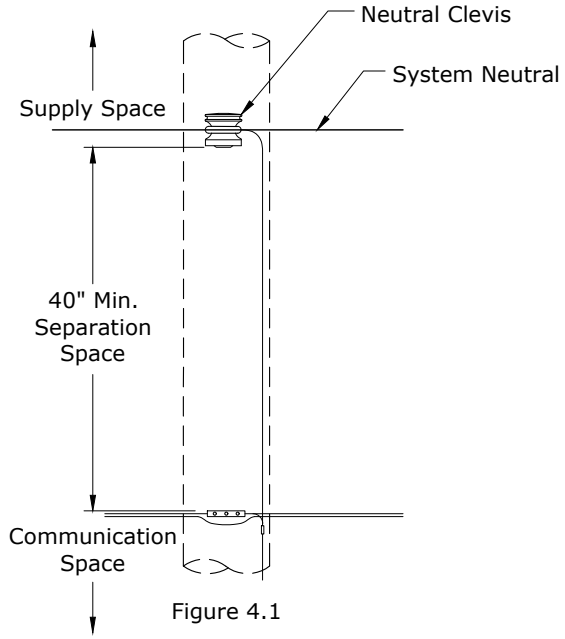

Figure 4.1

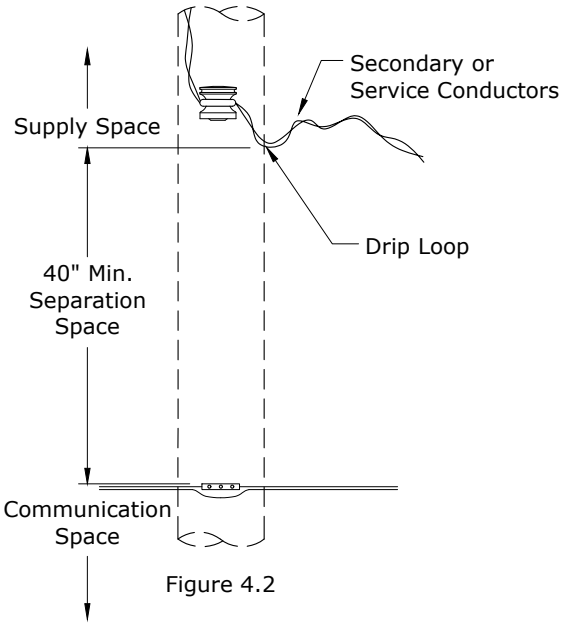

Figure 4.2

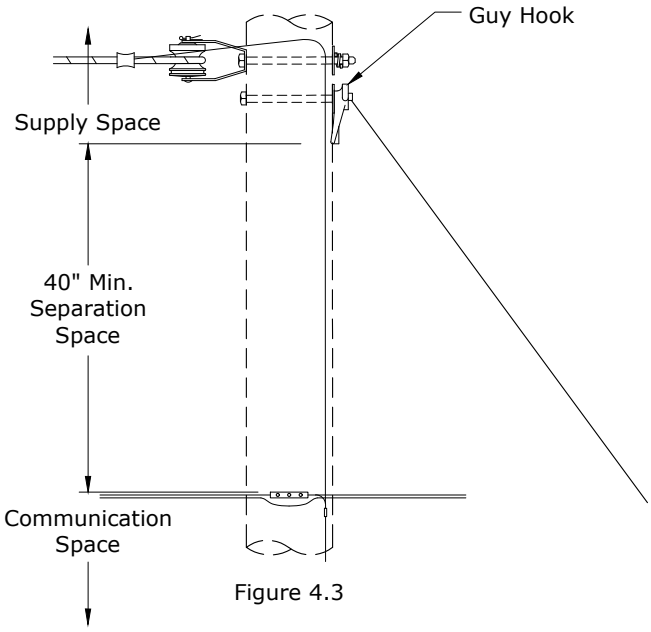

Figure 4.3

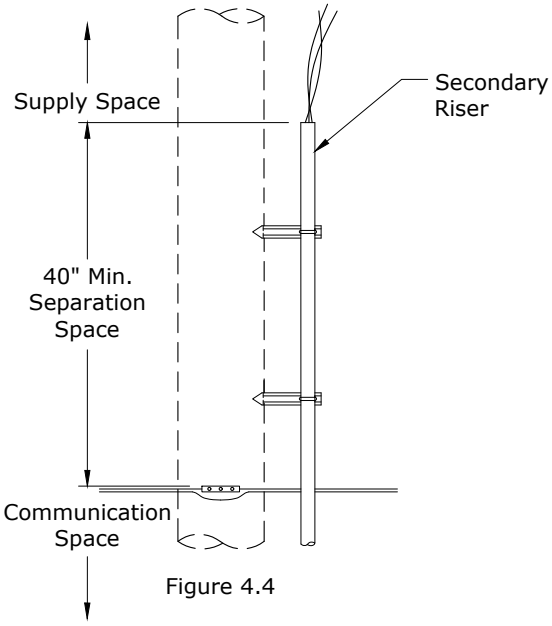

Figure 4.4

Rev. 3 - Added language that comm anchor shall be between pole & CPU anchor, and restricting comm risers on switch poles.

4.1. Distribution Clearances at Supports (CONTINUED)

If the primary and neutral conductors are mounted on a crossarm at the same level and there is no other supply equipment mounted below the primary arm, then the minimum clearance between the supply conductors and the communication space is 7 feet (see Figure 4.5).

Note: When working near energized wires, equipment or parts, refer to WAC 296 for minimum clearance requirements.

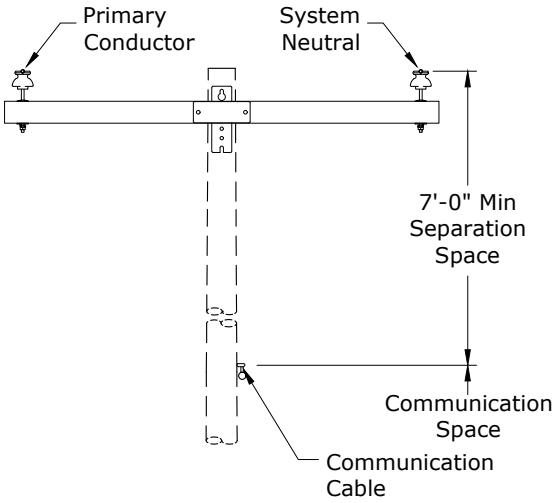

Figure 4.5

4.2. Midspan Distribution Clearances

Midspan clearance between the supply space and the communications space at any point in the span cannot be less than 30 inches from effectively grounded neutral conductors (NESC 238B) and 5 feet 3 inches from primary conductors (see Figures 4.6 & 4.7).

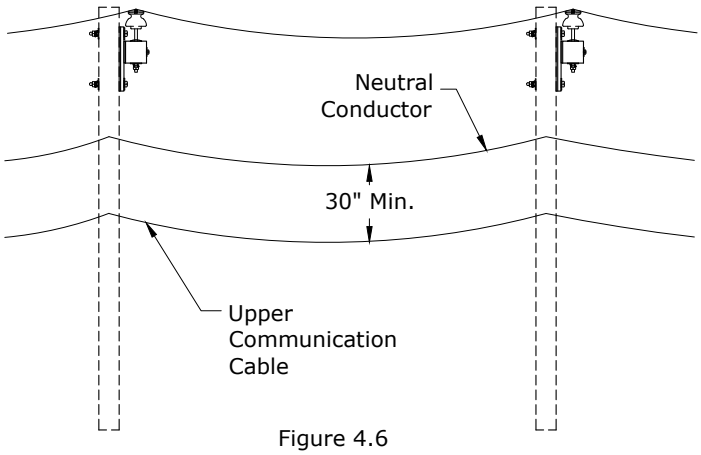

Figure 4.6

4.3. Transmission Clearances

Clearances on transmission poles that have no distribution underbuild will be reviewed and approved by CPU engineering and stipulated on the attachment permit.

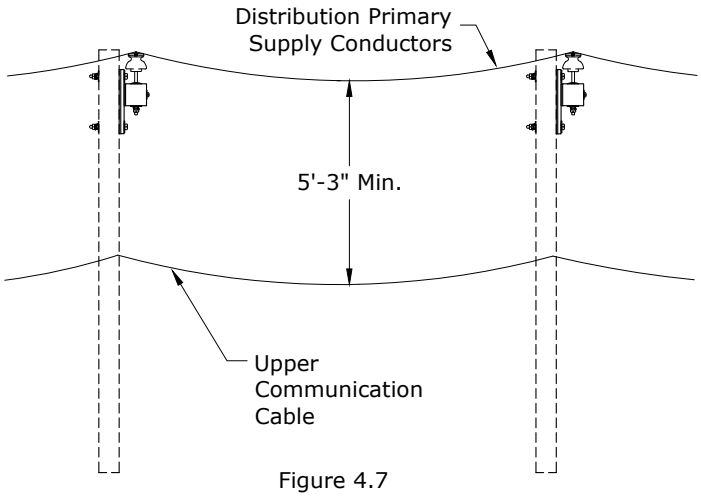

Figure 4.7

Rev. 3 - Added language that comm anchor shall be between pole & CPU anchor, and restricting comm risers on switch poles.

4.4. Streetlight Clearances

Provided certain minimum clearances are met, streetlights may be mounted in the communication worker safety zone or below the communication space. When streetlights are mounted above communication cables, a minimum of 12 inches of clearance must be maintained between the top of the communication space and the bottom of the streetlight drip loop. This may be reduced to 3 inches if the drip loop is covered and a non-conductive covering extending at least 2 inches beyond the drip loop. A minimum of 40 inches of clearance must be maintained between the top of the communication space and the bottom of the streetlight mast arm. This may be reduced to 4 inches if the mast arm is effectively grounded (see Figure 4.8 and NESC 238C).

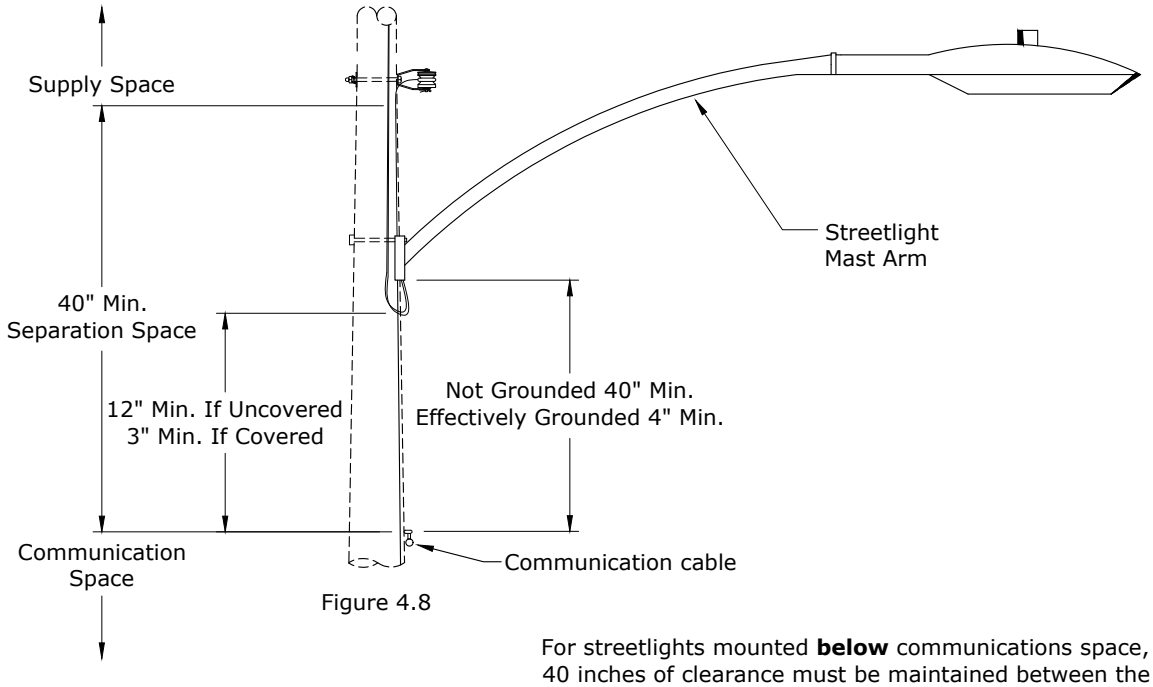

Figure 4.8

For streetlights mounted **below** communications space, a minimum of 40 inches of clearance must be maintained between the bottom of the communication space and the top of the streetlight bracket. This may be reduced to 4 inches if the mast arm is effectively grounded. A minimum of 40 inches of clearance must be maintained between the bottom of the communication space and uncovered streetlight conductors. A protective moulding will be used to cover energized streetlight conductors passing through the communication space (see Figure 4.9).

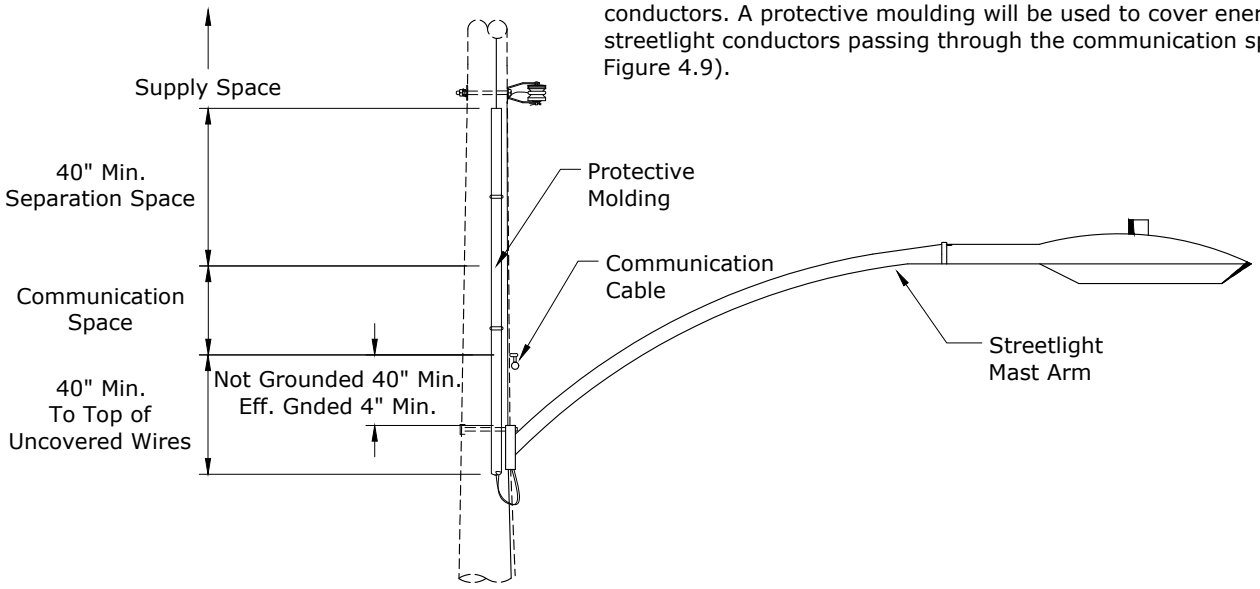

Figure 4.9

Rev. 3 - Added language that comm anchor shall be between pole & CPU anchor, and restricting comm risers on switch poles.

4.5. Service Entrance Clearance

Communication service drops shall have a minimum 12 inch clearance from CPU service drops at any point in the span down to their point of attachment at the customer's service entrance (see Figure 4.10 and Figure 4.10A). This applies to service entrance attachments at buildings and meter poles. Minimum clearance at a CPU service pole or distribution pole is 40 inches (See Figure 4.10B).

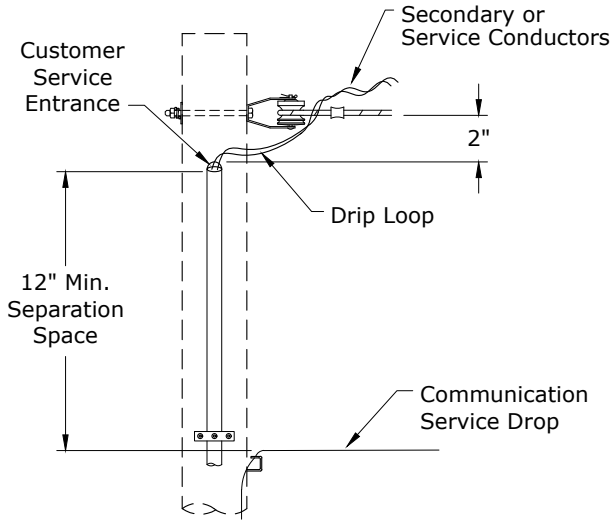

Meter Pole
Figure 4.10

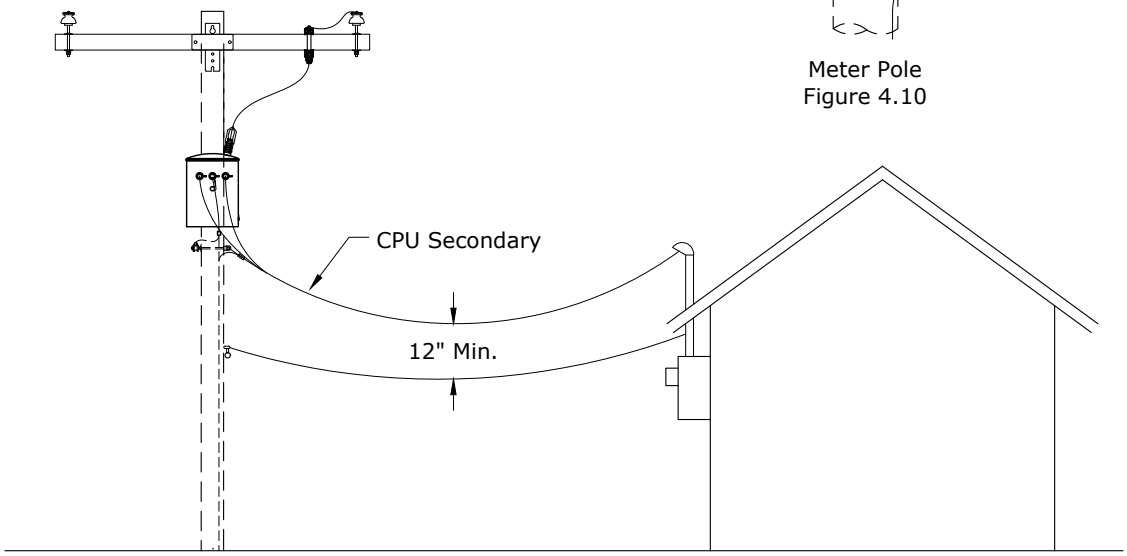

Figure 4.10A

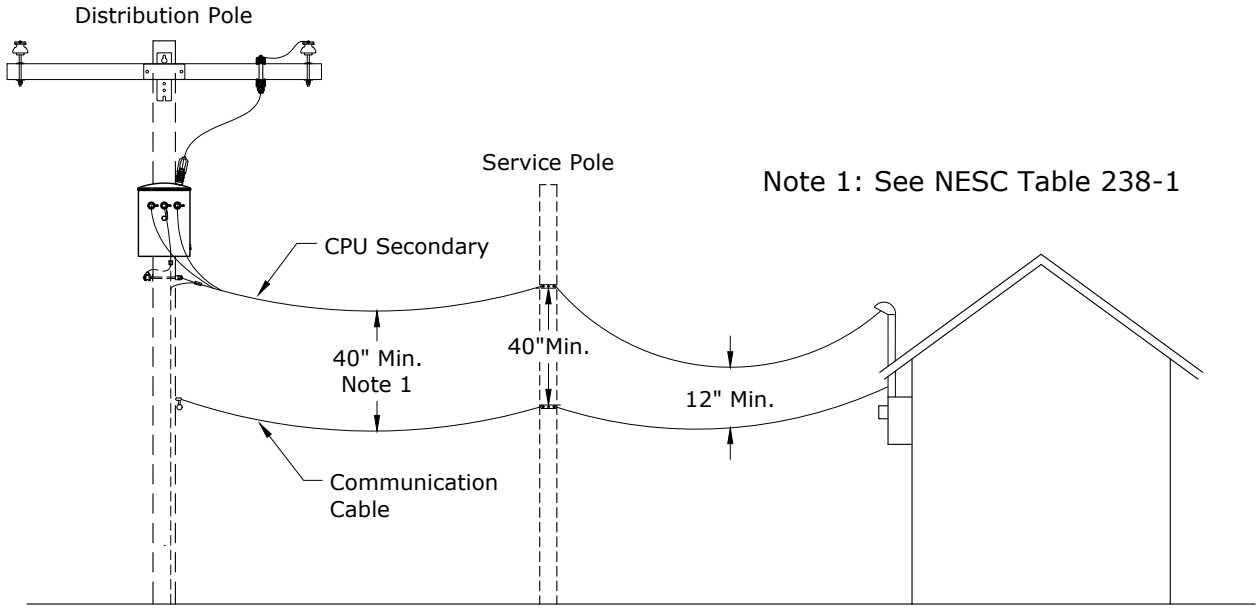

Figure 4.10B

Rev. 3 - Added language that comm anchor shall be between pole & CPU anchor, and restricting comm risers on switch poles.

Clark Public Utilities

CONSTRUCTION STANDARDS

JOINT USE
POLE ATTACHMENT GUIDELINES

REVISIONS

R	DATE	ENGR	OPS
1	5/15/06	LB	AH
2	12/7/17	CM	DK
3	3/7/23	CM	GM

PAGE: 6 of 9 | JU2 | CAD FILE: JU2 | APP: LB/AH | DATE: 12/02/03 | SECTION 1910

4.6. Climbing Space

To provide adequate clearances on the pole for safe ascent and descent by line personnel, a clear climbing space of 24 inches between communication cables must be provided (see Figure 4.11). This space must extend 40 inches above and below the limiting cables (see Figure 4.11A). The climbing space may be rotated around the pole for continued climbing if the climbing spaces in different quadrants overlap.

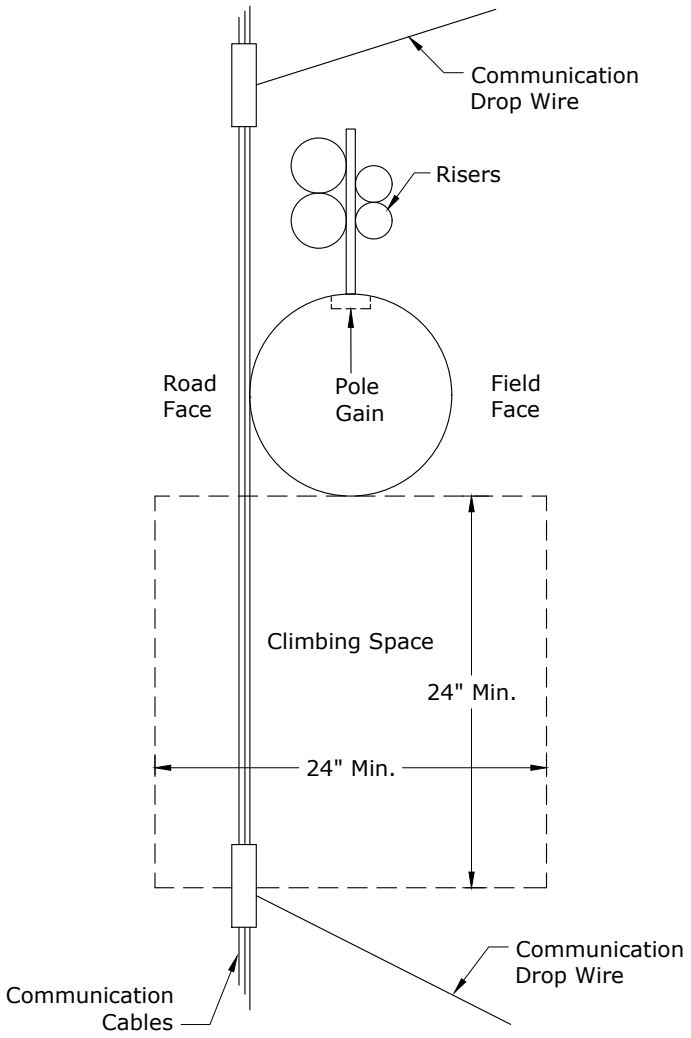

Figure 4.11

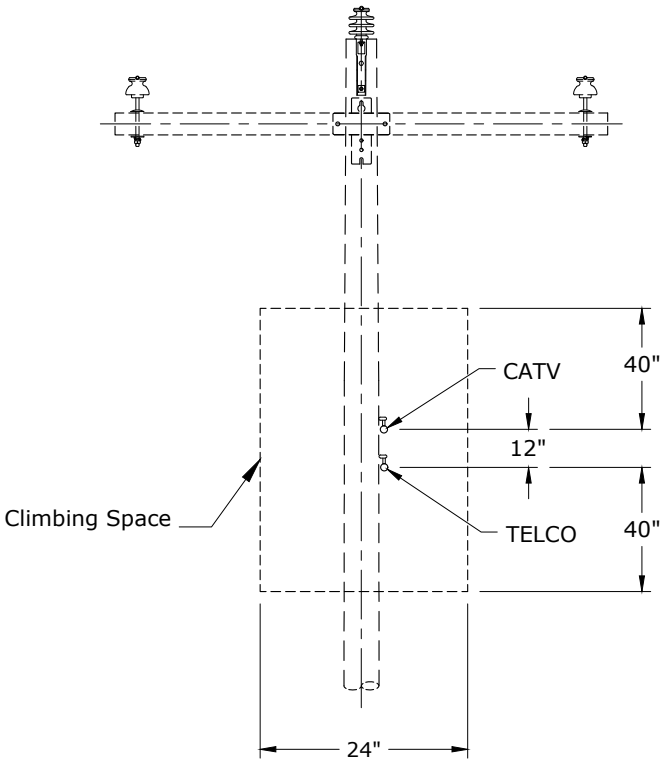

Figure 4.11A

Rev. 3 - Added language that comm anchor shall be between pole & CPU anchor, and restricting comm risers on switch poles.

5. Pole Space Allocation

5.1. Jointly-Owned CPU or CenturyLink Poles

Some distribution poles in CPU's system are jointly owned. CPU, CenturyLink and third party communication attachments on typical 45 foot joint distribution poles are shown in Figure 5.1.

A 4-foot space is reserved to third party communication attachments. This space extends from 23 feet to 27 feet above grade. No third party attachments shall be made above or below this space. A 12-inch clearance shall be maintained between attachments in this space. New attachments must be made at the highest available position in the communication space.

5.2. Boxing-In

Boxing-in CPU's poles shall be avoided, if possible. If boxing-in is necessary, the communication company will request approval from CPU before the boxing-in attachment is constructed. CPU reserves the right to refuse any requests for boxing-in a jointly owned pole.

Joint CPU/CenturyLink 45' Pole

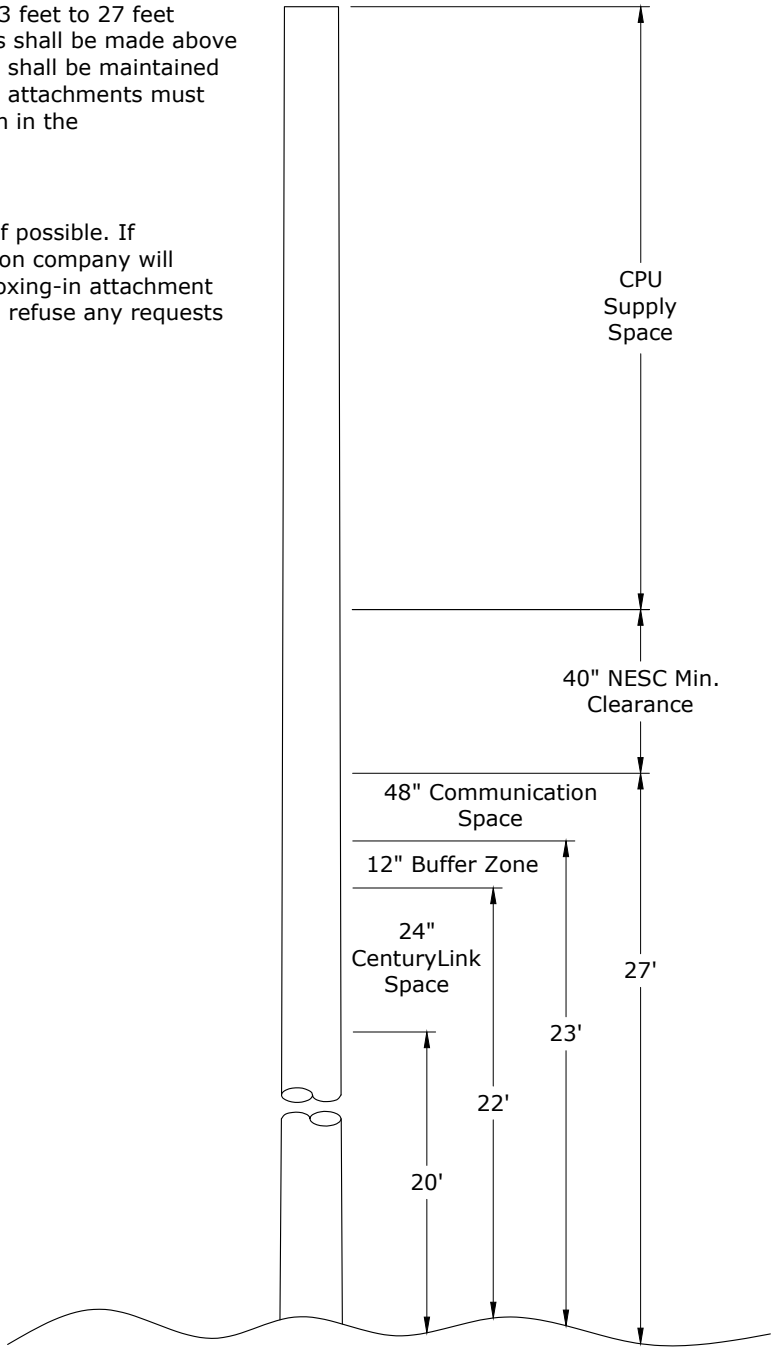

Figure 5.1

Rev. 3 - Added language that comm anchor shall be between pole & CPU anchor, and restricting comm risers on switch poles.

5.3. CPU Solely-Owned Distribution Poles

Some CPU distribution poles and most of the CPU transmission poles are 100% CPU-owned. All communication company attachments on these poles are subject to the CPU Pole Attachment Agreement. Space allocation on a new 45-foot CPU-owned pole is shown in Figure 5.2.

A 7-foot space is reserved for third party communication attachments. This space extends from 20 feet to 27 feet above grade. No non-CPU communication attachments shall be made above or below this space. A 12-inch clearance shall be maintained between attachments in this space. New attachments must be made at the highest available position in the communication space with the exception of telephone attachments. Telephone cables shall be attached at the lowest available position in the communications space that provides adequate clearance and is consistent with telephone attachments on adjacent joint-owned CPU/CenturyLink poles.

5.4. Boxing-In

Boxing-in CPU's poles shall be avoided, if possible. If boxing-in is necessary, the communication company will request approval from CPU before the boxing-in attachment is constructed. CPU reserves the right to refuse any requests for boxing-in a CPU owned pole.

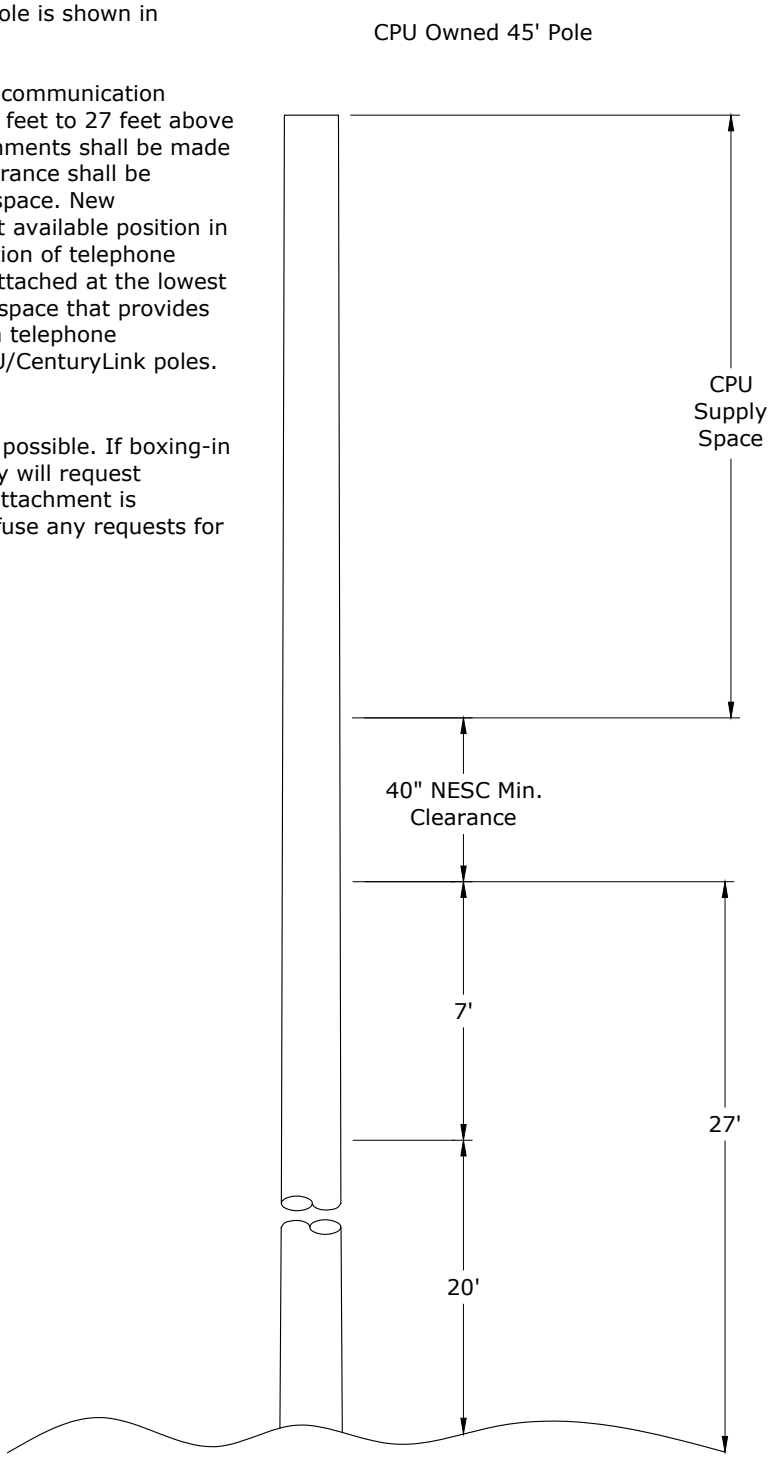

Figure 5.2

Rev. 3 - Added language that comm anchor shall be between pole & CPU anchor, and restricting comm risers on switch poles.

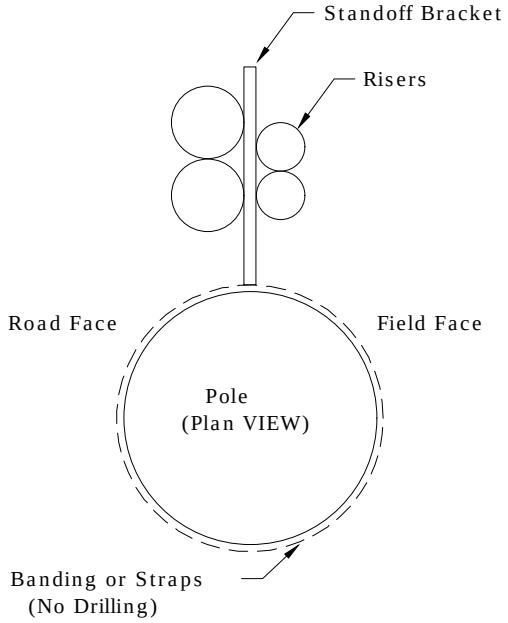

Plan View

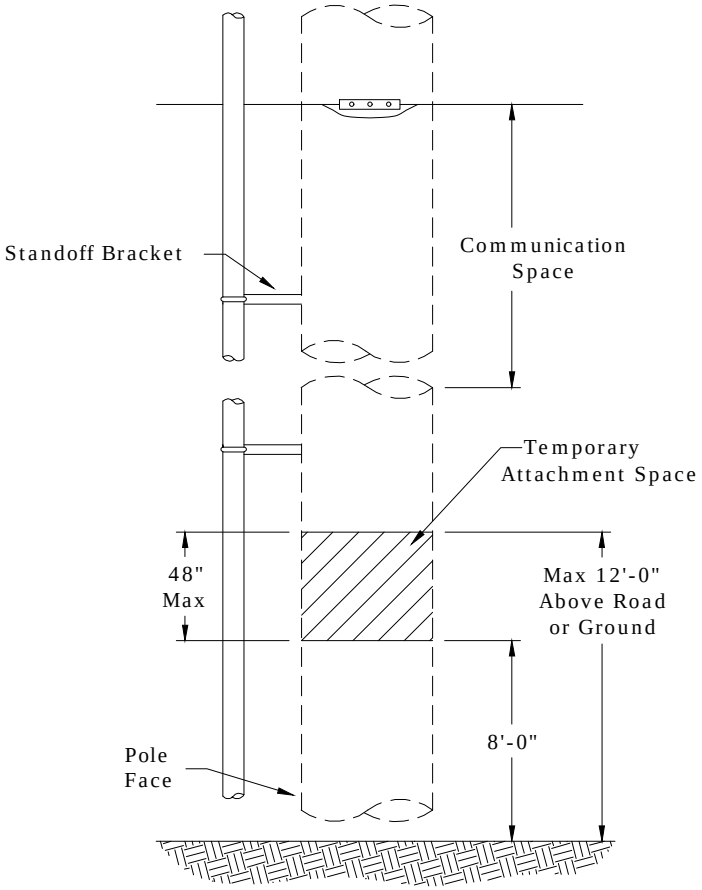

Elevation View

Note: OK to remove camera from pole if needed to climb.

Clark Public Utilities

CONSTRUCTION STANDARDS

JOINT USE
TEMPORARY (30 DAY) ATTACHMENT

REVISIONS			
R	DATE	ENGR	OPS

PAGE:		CAD FILE:	APP: CM/AH	SECTION
1 of 1	JU3	JU3	DATE: 10/17/08	1910

1. General

This standard covers the following wireless communication antenna assemblies: Macrocell and small cell antennas installed on the pole. All installations must meet all requirements of the National Electric Safety Code (NESC), Clark Public Utilities' (CPU's) Construction Standards, and all regulations of the State of Washington and other regulatory bodies that have jurisdiction.

2. Macrocell

2.1. Location

A. Antenna installations will be allowed in commercial/industrial areas of Clark County. Due to aesthetic considerations and the effect on property value, macrocell antennas may not be allowed in residential neighborhoods.

B. Antenna installations will require a taller pole than the existing pole. Several jurisdictions within Clark County have height restrictions.

- Clark County Ordinance 40.260.250 covers unincorporated Clark County. A pole being replaced for an antenna can only be 20 feet taller than the existing pole. The antenna and lightning rods are included in this additional 20 feet.
- The City of Vancouver Municipal Code, Title 20.890 (as of 1/26/2004), allows the new pole to be 15 feet taller than the existing. The antenna is included in this 15 feet. There is also an additional 10 feet above the 15 feet that is allowed for lightning rods or FAA required lighting.

C. The antenna company will be responsible for getting any zoning clearance, building permit(s), and any other applicable permits where required.

2.2. Design

A. Each antenna installation will be a unique design. The pole design will be done by the CPU Design Engineer. The antenna company shall supply the CPU Design Engineer with the following information when applying for service:

- The pole number and location that the antenna company would like the antenna installed on,
- The antenna array wind loading in the transverse and longitudinal directions under all NESC Heavy Loading conditions,
- Total weight of the antenna assembly without ice and with ½" coating of ice,
- The location above ground of the resulting load vector,
- Electrical loading, and
- Means of disconnecting the service.

B. All antenna installations in the supply space must have a quick means of RF radiation disconnect for emergency work on the pole by utility or communication workers. Such means of disconnect will also prevent backup sources from energizing the antenna. For normal maintenance work, Clark or the communication company will contact the antenna company to schedule the de-energization of the antenna.

Rev 3 - Drawings with wood crossarms updated to fiberglass tangent arms.

2.2. Design (Continued)

C. Antennas shall be installed and operated in a manner that communication and electrical workers can perform normal work on their respective facilities without requiring special training or knowledge of RF antennas. Electrical workers shall not need to wear RF detectors to warn them of potentially changing levels of EMF exposure when performing normal work on the electrical system. All antennas in the supply space will be on steel poles. The cables for the antenna will come up the inside of the pole. Since existing steel poles were designed only for the load they were originally installed for, most likely the pole will have to be replaced with a stronger one for the antenna installation. Drilling to mount the antenna on an existing steel pole will weaken the pole shaft and may result in corrosion. Steel poles with static wire cannot be used for antenna installations.

D. Poles that shall be avoided are

- Poles with existing antennas,
- Poles with switches,
- Poles with risers,
- Poles that will be used for risers in the future,
- Poles with transformers,
- Poles with capacitor banks,
- Poles with regulators,
- Poles with reclosers,
- Deadend poles,
- Poles with static wire,
- Poles with extreme angles,
- Poles at a traffic intersection,
- Streetlight poles, and
- Poles inaccessible by truck.

E. The antenna company will be responsible for performing a TOWAIR (or Landing Slope Facility Calculator) study. TOWAIR allows antenna structure owners to determine whether their structures are close enough to an airport or heliport to require an aeronautical study by the Federal Aviation Administration (FAA) and registration with the FCC. If it is determined that the designated structure must be registered, an Antenna Structure Registration (ASR) number must be obtained from the FCC. This number is required in order for the antenna company to begin construction at the site. If the FAA determines that the structure must be painted or lighted, the antenna company will be responsible for the painting or lighting.

F. All antenna equipment cabinets, boxes, and enclosures shall be clearly marked with

- The antenna equipment owner's name,
- A 24-hour contact phone number, and
- Identifying alpha/numeric designation that the antenna owner can associate with the installation address, type of equipment, and function.

G. The antenna company shall ensure the appropriate OSHA-required radio-frequency radiation hazard warning sign(s) are installed.

2.3. Clearance

A. The minimum clearance from distribution or transmission to the antenna is shown in Figure 1.

B. Communication equipment cabinets must not block access to the pole. The preferred location is on adjacent private property, if possible, at least 25 feet away from the pole. Conduits shall be run underground between the pole and the cabinet.

Rev 3 - Drawings with wood crossarms updated to fiberglass tangent arms.

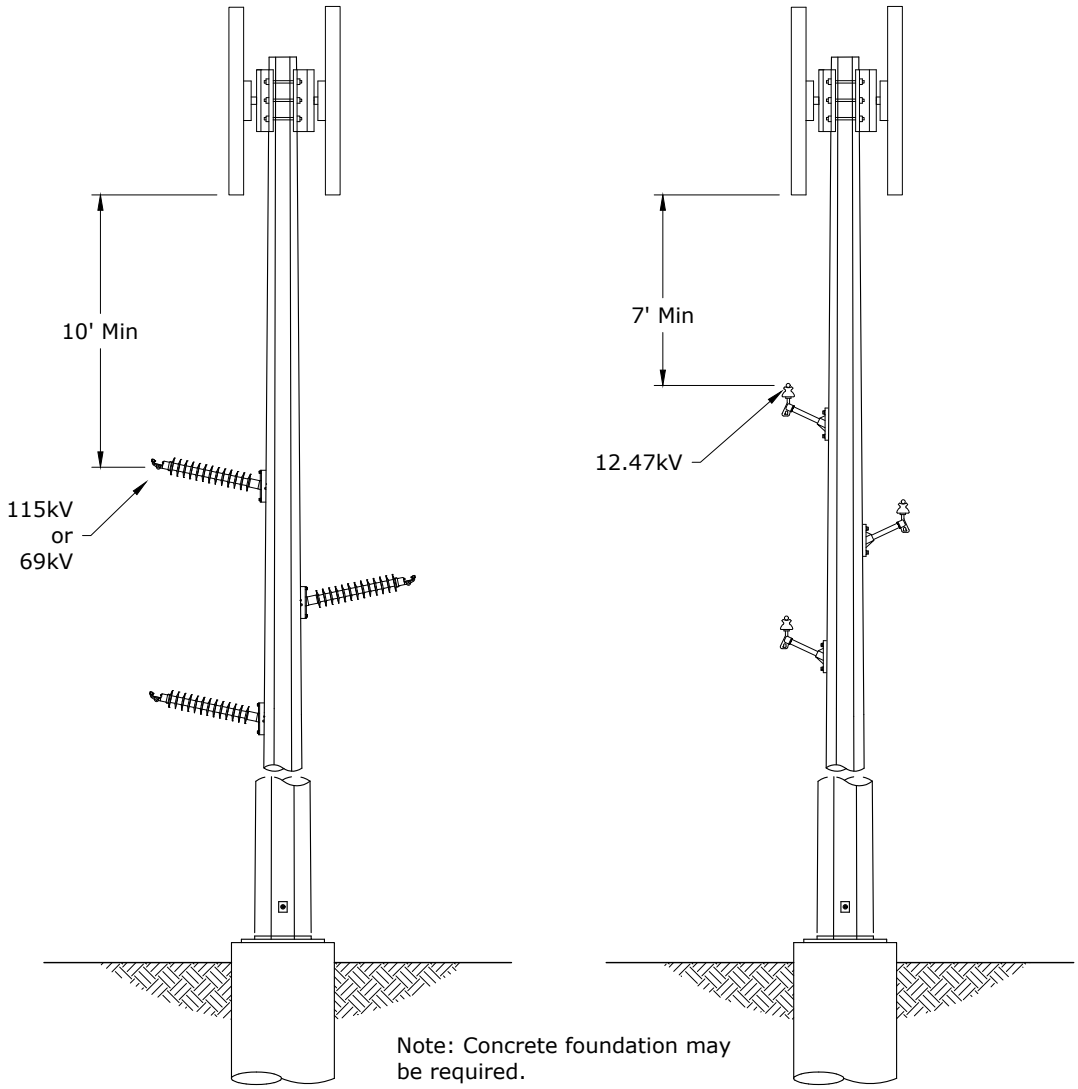

Figure 1: Macrocell clearances.

2.4. Installation & Maintenance

A. Antennas located in the supply space shall be installed and maintained by qualified line workers only. The antenna company will have to coordinate with CPU on all installation and maintenance work.

B. The antenna company must notify the surrounding landowners of the pole modifications prior to installation.

Rev 3 - Drawings with wood crossarms updated to fiberglass tangent arms.

3. Small Cell on Poles

3.1. Location

A. The preferred poles for small cell antenna installations in order of preference are

1. Secondary pole,
2. Wood streetlight pole, and
3. Distribution pole

B. Poles that are restricted and require special consideration are

- Poles with secondary risers,
- Poles reserved for CPU risers,
- Poles with one transformer,
- Deadend poles,
- Poles with extreme angles (30° or more),
- Poles at a traffic intersection,
- Decorative streetlight poles,
- Fiberglass or aluminum streetlight poles, and
- Transmission poles with or without distribution.

C. Poles that shall be avoided are

- Poles with primary risers,
- Poles with existing antennas,
- Poles with switches,
- Poles with transformer banks,
- Poles with capacitor banks,
- Poles with regulators,
- Poles with reclosers, and
- Poles inaccessible by truck.

D. The antenna company will have to obtain easements from the property owner for any poles on private property.

E. The antenna company shall consider proximity to residential structures, aesthetics, and effects on property values. Proposed sites that will be closer than 30' to a residential building or 50' to a school building shall be subject to additional review by CPU. Installations on poles directly in front of a residence should be avoided when other possibilities are available.

F. The antenna company will be responsible for getting any zoning clearance, building permit(s), and any other applicable permits where required.

Rev 3 - Drawings with wood crossarms updated to fiberglass tangent arms.

3.2. Design

A. Each antenna installation will be a unique design. Antennas shall be installed in the supply space only. The pole design will be done by an engineering firm licensed and registered in Washington State and hired by the antenna company. The antenna company shall supply the CPU Design Engineer with the following information when submitting for a Site License Agreement (SLA):

- The pole number and location that the antenna company would like the antenna installed on
- The size, weight, and color of all equipment in the proposal
- The antenna and associated equipment wind loading in the transverse and longitudinal directions under all NESC Heavy Loading conditions
- Total weight of the antenna and associated equipment without ice and with ½" coating of ice
- The location above ground of the resulting load vector
- Electrical loading
- Means of disconnecting the service

B. Small cell antennas and mounting bracket will be no higher than 42". The antenna diameter will be no more than 16".

C. Equipment should be installed on the roadside of the pole. If this is not possible, other locations may be used with CPU's prior approval. Each piece of equipment must be no more than 42" high x 24" wide x 18" deep and must be installed below the communication space between 10 feet and 18 feet above groundline (see Figure 2). Climbing space must be maintained as specified in WAC 296-45-045. There shall be no more than two pieces of equipment for a total volume of 12 cu ft. The equipment must be between 4 inches and 6 inches off of the pole surface and must fit within one pole quadrant as shown in Figure 3. See Std. JU2 - Joint Use Pole Attachment Guidelines for required clearances. Meters, when used, must be padmounted at least 6 feet from the pole.

D. Antennas and pole-mounted equipment shall be Light Gray Number 70, Munsell Notation 5BG 7.0/0.4 unless otherwise approved or required by CPU.

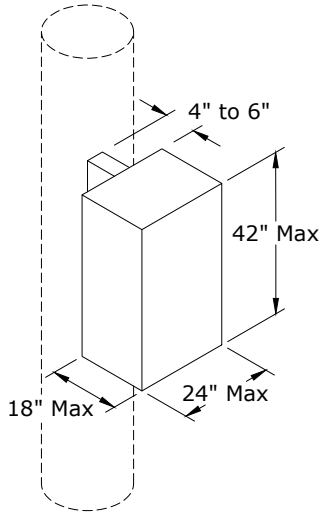

Figure 2: Allowable size of equipment below communication space.

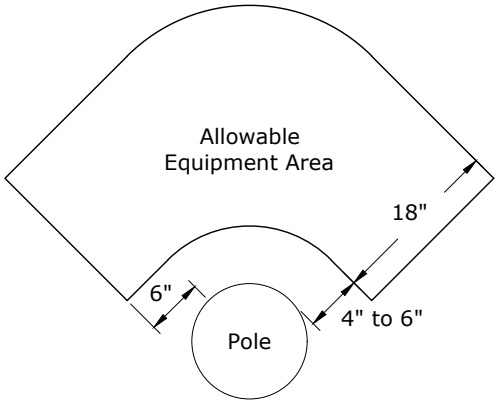

Figure 3: Allowable equipment area below communication space.

Rev 3 - Drawings with wood crossarms updated to fiberglass tangent arms.

3.2. Design (Continued)

E. For installations in the supply space see Figure 4 and Figure 5. The existing pole may need to be replaced with a taller or stronger pole. Pole-top extensions will not be allowed.

F. All antenna equipment cabinets, boxes, and enclosures shall be clearly marked with

- The antenna equipment owner's name,
- 24-hour contact phone number,
- Identifying alpha/numeric designation that the antenna owner can associate with the installation address, type of equipment, and function, and
- SLA numbers (decals provided by CPU).

G. The antenna company shall ensure the appropriate OSHA-required radio-frequency radiation hazard warning sign(s) are installed.

H. No antennas or equipment will be allowed in the communication worker safety zone per the NESC.

I. All risers, except those above the primary conductors, shall be mounted on standoff brackets that provide a minimum of 6 inches between the surface of the conduit and the pole. U-guard risers are not allowed. The first standoff bracket must be at least 8' above grade per NESC. Standoffs shall not be closer together than 8' unless one is necessary to support the end of a conduit. Existing standoffs are to be used if present.

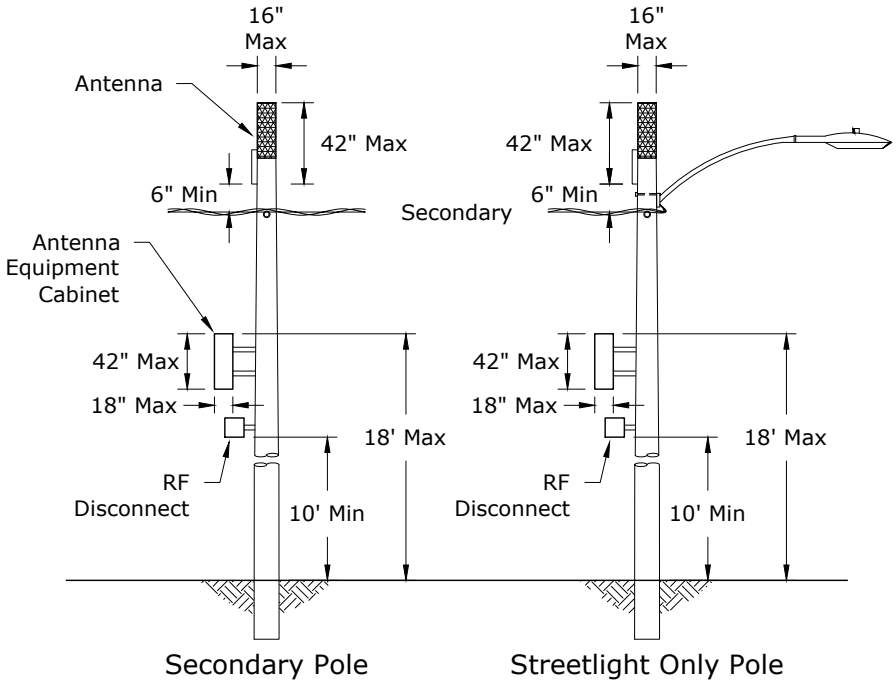

Figure 4: Small cell antenna installation clearances on secondary poles.

Note: Other antenna and mounting styles may be acceptable. Clearances shown shall remain.

Rev 3 - Drawings with wood crossarms updated to fiberglass tangent arms.

3.2. Design (Continued)

J. All riser cables shall be in conduit. No more than three conduits per pole shall be used. All conduits shall be

- 3 inches or less in diameter, and
- Gray, UL-listed, Schedule 80 PVC.

K. Communication equipment cabinets located on the ground shall not block access to the pole and are required to be at least 6-1/2 feet away from the pole.

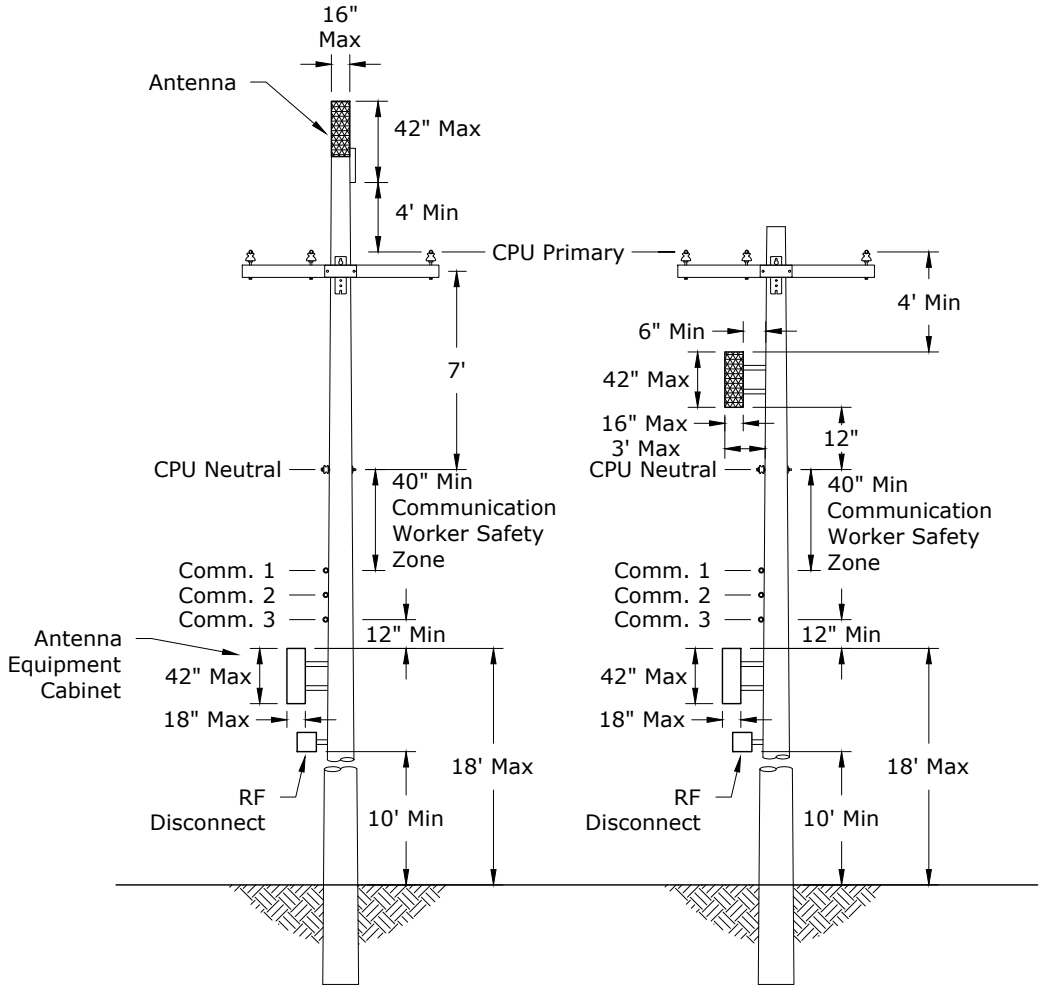

Distribution Pole
Antenna Above Supply Space
(Preferred)

Distribution Pole
Antenna In Supply Space
(Alternate)

Figure 5: Small cell antenna installations in the supply space.

Note: Other antenna and mounting styles may be acceptable. Clearances shown shall remain.

Rev 3 - Drawings with wood crossarms updated to fiberglass tangent arms.

3.2. Design (Continued)

L. All antenna installations must have a quick means of RF radiation disconnect for emergency work on the pole by utility or communication workers. Such means of disconnect will also prevent backup sources from energizing the antenna. The disconnect on the pole must be clearly marked "RF Disconnect." Antennas shall be installed and operated in a manner that communication and electrical workers can perform normal work on their respective facilities without requiring special training or knowledge of RF antennas. Electrical workers shall not need to wear RF detectors to warn them of potentially changing levels of RF exposure when performing normal work on the electrical system.

3.1. Installation & Maintenance

A. Small cell installations should be as neat and condensed as possible. Lessees shall be responsible for installing each new type of installation on a pole in CPU's training yard prior to permitting for such types of installations on CPU's poles. To be the same type the antenna, equipment cabinet, disconnect, and mounting hardware must be the same and located in the same area of the pole as those that will be permitted. It is not necessary that they have the same heights from ground measurements. Each must include conduits that will be installed. The wires, fibers, or cables installed between the equipment and the antenna on an installation may be required at CPU's discretion. Lessee may provide a location where the same type is currently installed and operating that is within 30 driving miles of CPU's border instead of installing one in the training yard.

B. Antennas located in the supply space shall be installed and maintained by qualified line workers only. The antenna company will have to coordinate with CPU on all installation and maintenance work.

C. The antenna company must notify the surrounding landowners of the pole modifications prior to installation.

D. The pole may not be shaved or cut. Equipment mounts must be sized to account for variation in wood pole dimensions.

E. Field drilled pole holes shall be treated with CPU-approved wood preservative.

F. No storage loops of wires shall be allowed.

G. Area between equipment and the pole surface is to remain clear for climbing safety.

Rev 3 - Drawings with wood crossarms updated to fiberglass tangent arms.