1600
1000 MCM CABLE

12/23/2022

~	UEE1	Elbow Enclosure - Deadend
~	UEE2	Elbow Enclosure - Feed-Through
C	UPR1	1000 MCM Cable Riser
C	UPR2	1000 MCM Power Cable Riser Grounding Detail
C	UPR4	1000 MCM Cable Riser with 3Ø Switch
C	UPR5	1000 MCM Cable Riser with 600 Amp Disconnects
C	UPR6	Parallel 1000 MCM Cable Riser with 3Ø Switch
~	USG1	Padmount Switchgear - 600A Elbow - 1000MCM Cable
~	USG2	Padmount Switchgear Chart
~	USG3	Deadfront Switchgear – 612 Vault Detail
~	USG5	Deadfront Switchgear on 774 Vault For Maintenance Only or When Std USG3 Vault Will Not Fit
~	USG8	Below Grade Switchgear – Use w/ Std USG9
~	USG9	Below Grade Switchgear – Vault Detail – Use w/ Std USG8
~	USP	1000MCM Splice Pit Flush-Mount

N New Standard
R Redrawn Standard
C Changed Standard
~ No Change

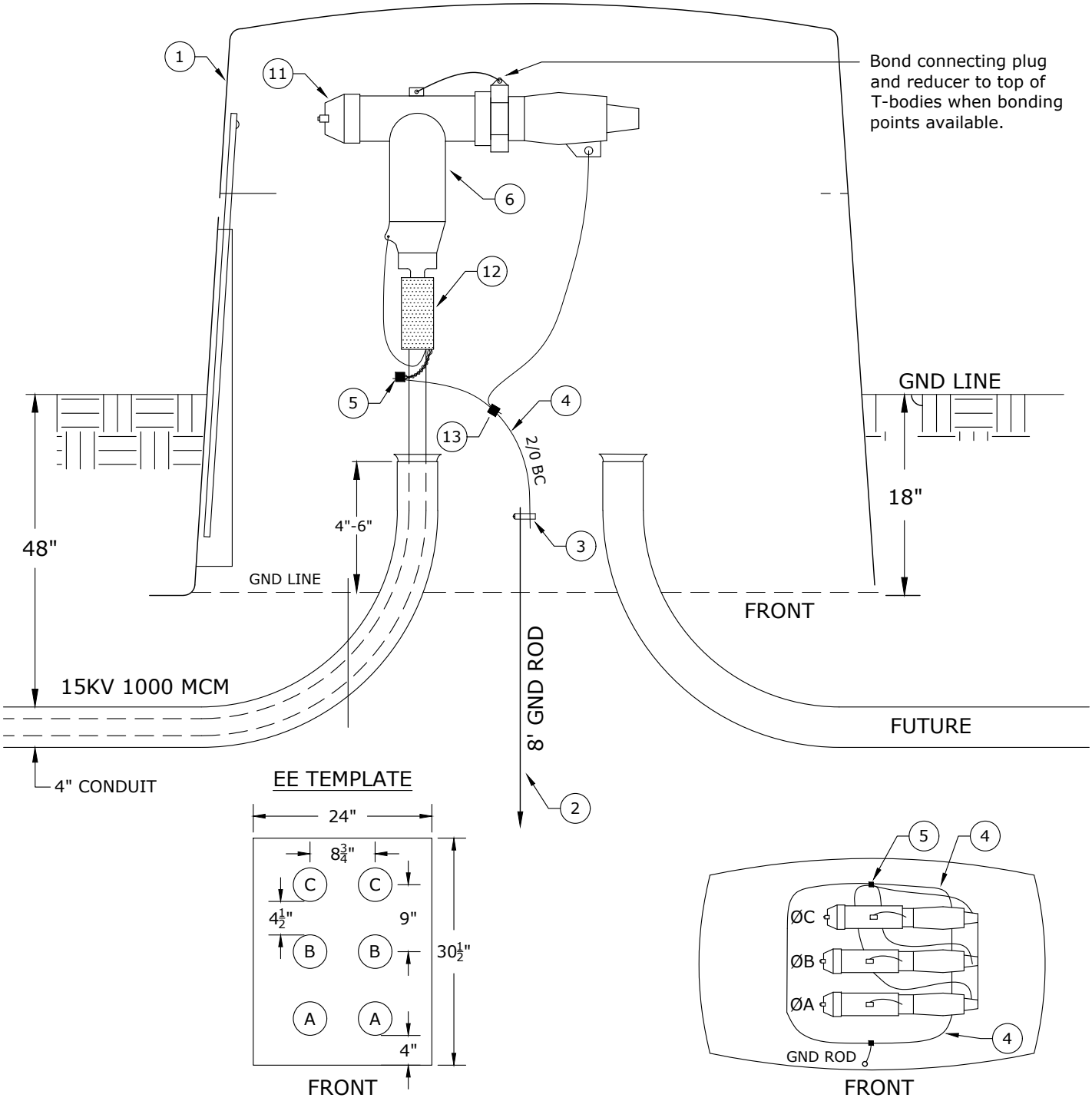

Notes:

1. Use EE template when framing conduits and backfilling.
2. Leave enough cable slack to position the elbow near the top of the enclosure lid. This provides room for future operations.
3. Elbows assemble 8-3/4" apart (center to center). Align conduits to avoid cable bending.

Rev. 4 - Corrected material list, torque requirements, and template dimensions.

Clark Public Utilities

CONSTRUCTION STANDARDS

ELBOW ENCLOSURE
DEADEND

REVISIONS

R	DATE	ENGR	OPS
1	9/23/04	LB	AH
2	10/7/05	LB	AH
3	12/14/09	KJP	
4	8/8/22	CRM	GM

PAGE: 1 of 2

UEE1

CAD FILE: UEE1

APP:

DATE: 6/90

SECTION 1600

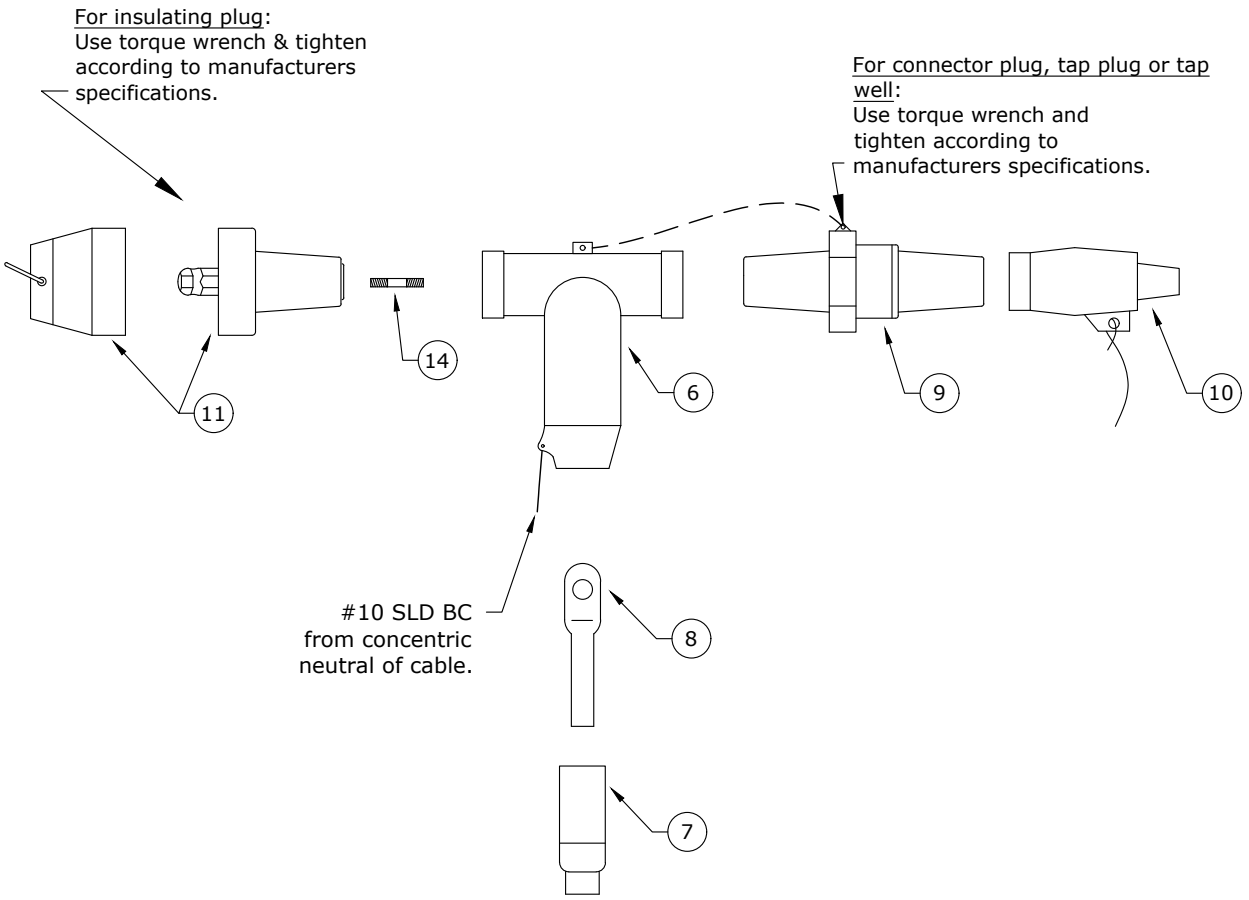

DEADEND

Rev. 4 - Corrected material list, torque requirements, and template dimensions.

ITEM NO.	DESCRIPTION	UEE1☼	
		QTY.	S/N
1	Enclosure, Elbow (EE), Fiberglass, 72"w x 49"h x 44"d	1	2213
2	Rod, Ground, 5/8" x 8'	1	1124
3	Clamp, Ground Rod, 5/8" Bronze, Large	1	282
4	Conductor, OH, Cu, 2/0, 7-Str, Bare, Soft-Drawn, 1C	30 Ft.	379 ☼
5	Connector, Crimpet, Cu, Run & Tap 3/0 to 4/0 Str	3	460
6	Elbow, 600 Amp, T-body	3	1825
7	Adapter, Cable, 1000 MCM	3	1
8	Contact, Compression, Al, 1000 MCM, Non-Threaded Hole	3	941
9	Plug, Loadbreak, Reducing Tap, 600A-200A	3	1769
10	Cap, Protective Insulated, 200A	3	265
11	Plug, Basic Insulating	3	1824
12	Elbow, Sealing Kit, 1000MCM, 175 & 220 mil	3	2376
13	Connector, Crimpet, Cu, Run & Tap 1/0 to 2/0 Str	1	457
14	Stud, Al, 600A T-body To Reducer Plug	3	2704 ☼

Clark Public Utilities

CONSTRUCTION STANDARDS

ELBOW ENCLOSURE
DEADEND

REVISIONS

R	DATE	ENGR	OPS
1	9/23/04	LB	AH
2	10/7/05	LB	AH
3	12/14/09	KJP	
4	8/8/22	CRM	GM

PAGE: 2 of 2

UEE1

CAD FILE: UEE1

APP:

DATE: 6/90

SECTION 1600

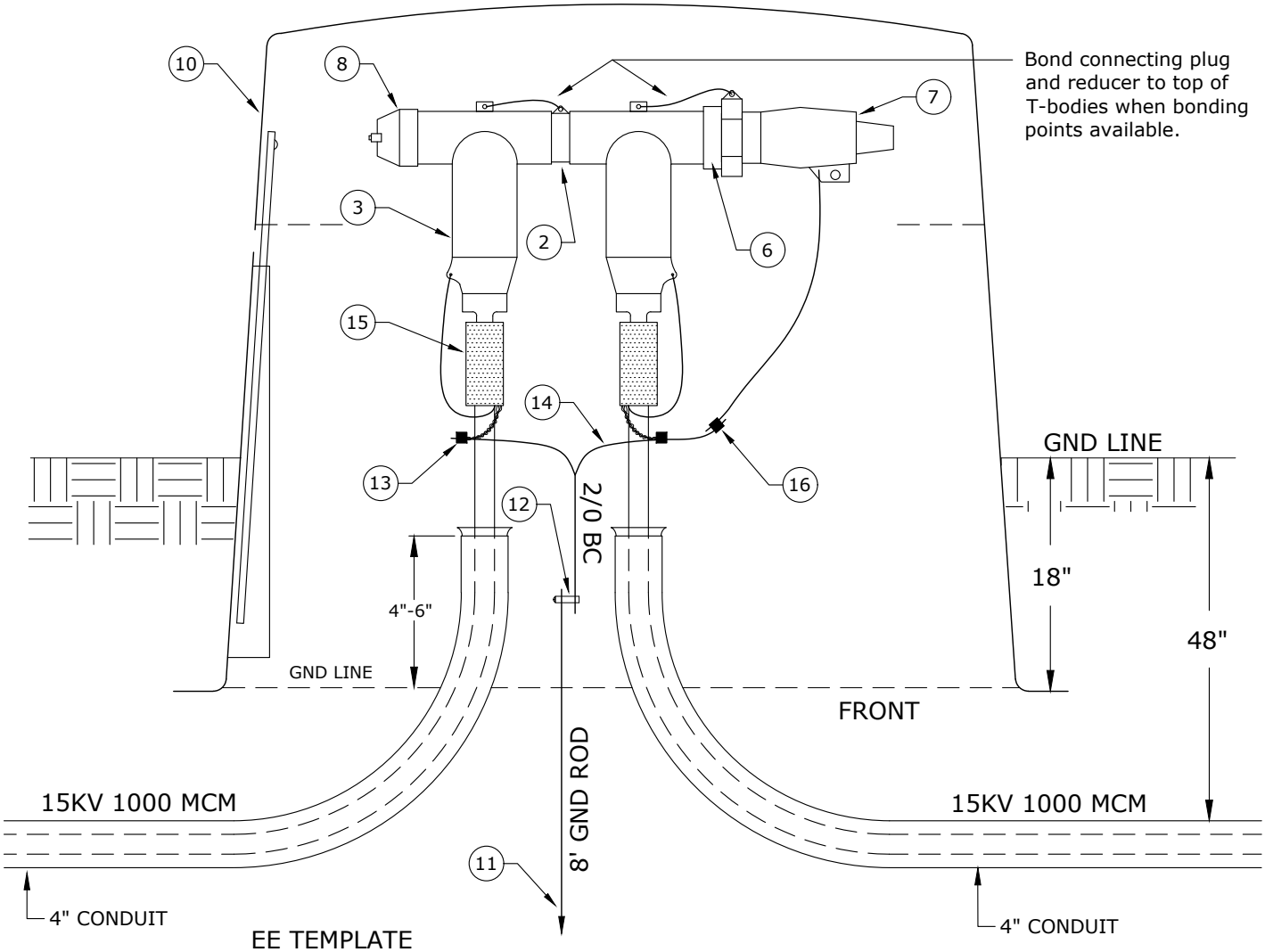

EE TEMPLATE

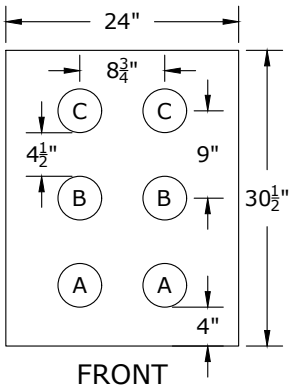

TOP VIEW

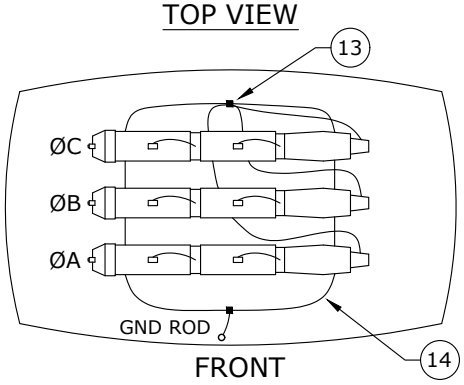

Notes:

1. Use EE template when framing conduits and backfilling.
2. Leave enough cable slack to position the elbow near the top of the enclosure lid. This provides room for future operations.
3. Elbows assemble 8-3/4" apart (center to center). Align conduits to avoid cable bending.

Rev. 3 - Corrected material list, torque requirements, and template dimensions.

Clark Public Utilities

CONSTRUCTION STANDARDS

ELBOW ENCLOSURE
FEED-THROUGH

REVISIONS

R	DATE	ENGR	OPS
1	10/7/05	LB	AH
2	8/25/09	CM	AH
3	8/8/22	CRM	GM

PAGE: 1 of 2

UEE2

CAD FILE: UEE2

APP: LB/AH
DATE: 9/23/04

SECTION 1600

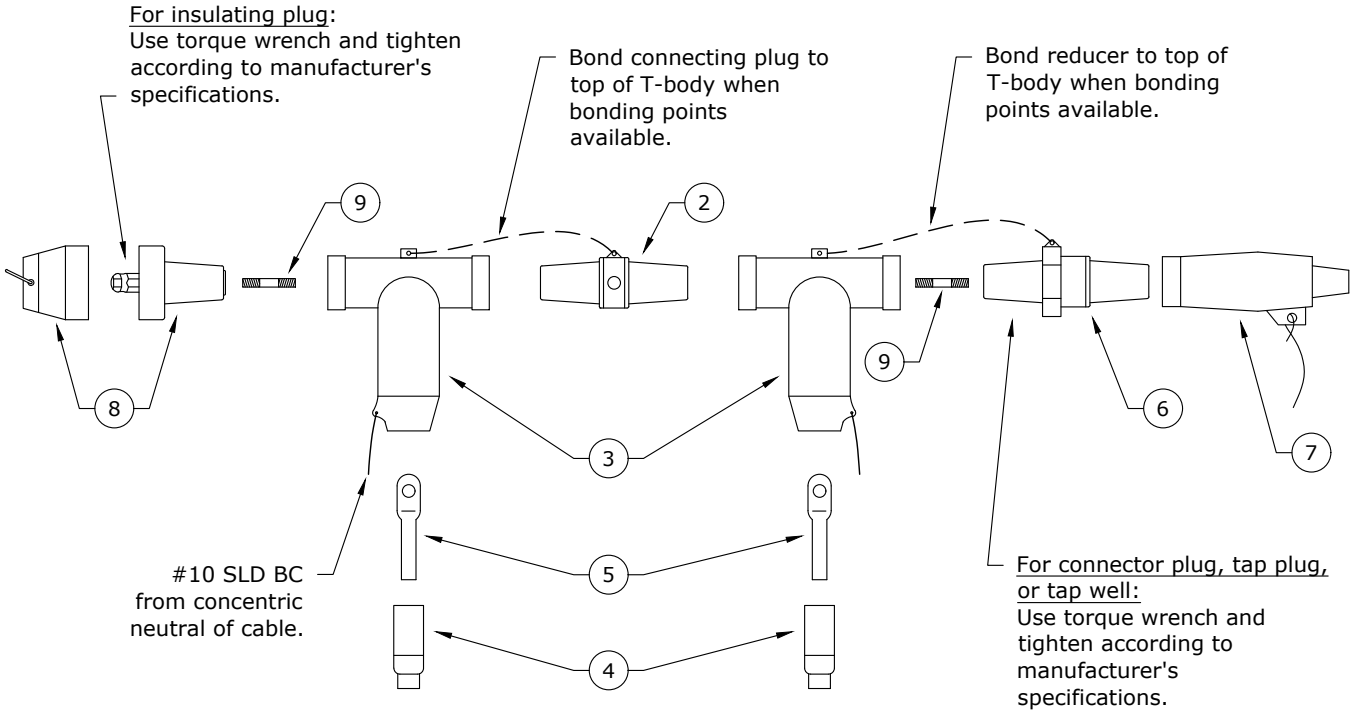

Rev. 3 - Corrected material list, torque requirements, and template dimensions.

ITEM NO.	DESCRIPTION	UEE2	
		QTY.	S/N
1	Elbow, 600A, NLB, Test Point, Kit for UEE2	3	2693
	Each Kit Consists Of: (Items #2 Thru #9)		
2	*Plug, Connecting, 600A*	1	1723
3	*Elbow, 600A, T-body*	2	1825
4	*Adapter, Cable, 1000MCM*	2	1
5	*Contact, Compression, Al, 1000 MCM, Non-threaded Hole*	2	941
6	*Plug, Loadbreak, Reducing Tap, 600A-200A*	1	1769
7	*Cap, Protective Insulated, 200A*	1	265
8	*Plug, Basic Insulating*	1	1824
9	*Stud, Al, 600A T-body To Reducer Plug*	2	2704 ✲
10	Enclosure, Elbow (EE), Fiberglass, 72"w x 49"h x 44"d	1	2213
11	Rod, Ground, 5/8" x 8'	1	1124
12	Clamp, Ground Rod, 5/8" Bronze, Large	1	282
13	Connector, Crimpet, Cu, Run & Tap 3/0 to 4/0	6	460
14	Conductor, OH, Cu, 2/0, 7-Str, Bare, Soft-Drawn, 1C	30 ft	379
15	Elbow, Sealing Kit, 1000MCM, 175 & 220 mil	6	2376
16	Connector, Crimpet, Cu, Run & Tap 1/0 to 2/0 Str	1	457

Clark Public Utilities

CONSTRUCTION STANDARDS

ELBOW ENCLOSURE
FEED-THROUGH

REVISIONS

R	DATE	ENGR	OPS
1	10/7/05	LB	AH
2	8/25/09	CM	AH
3	8/8/22	CRM	GM

PAGE: 2 of 2

UEE2

CAD FILE: UEE2

APP: LB/AH
DATE: 9/23/04

SECTION 1600

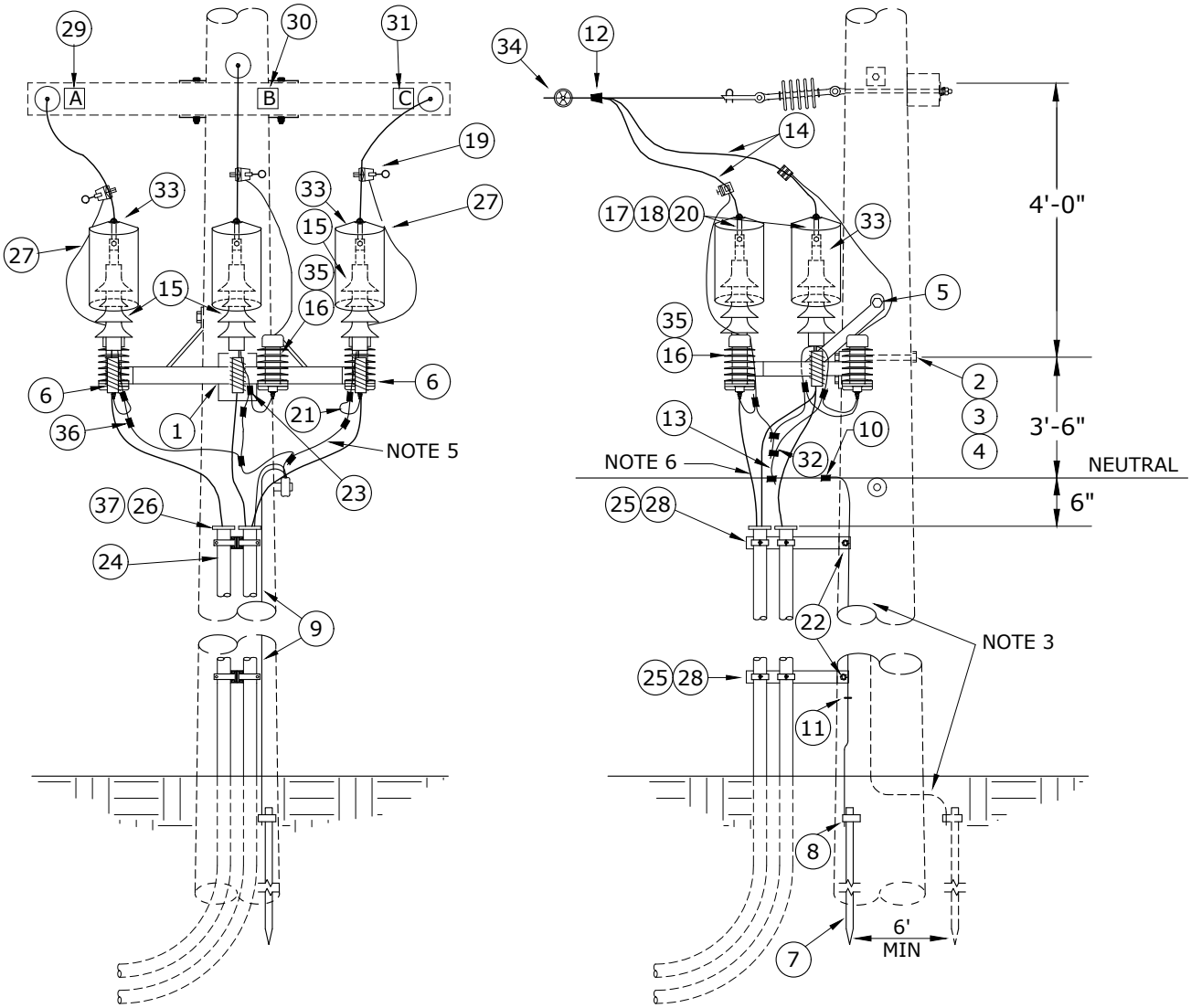

Notes:

1. UPR4 is the preferred standard. This standard is to be used for short dips such as airport dips or if other switches are nearby for isolation. See UPR4 for the recommended construction.
2. See UPR2 for grounding details.
3. All ground wire is #4 Cu equivalent covered copper-clad steel.
4. Static wire ground when required. DO NOT connect to neutral. See N2 for details. Engineer must call for static wire ground separately.
5. Avoid sharp turns in the arrester grounds and primary leads.
6. 2/0 CU from terminators to overhead neutral for all 1000MCM construction.

Rev 3 - Removed extra 2/0 Cu neutral for substation get-a-aways, changed to copper-clad steel grounds & added support grips and 4/0-2/0 crimpets.

Clark Public Utilities

CONSTRUCTION STANDARDS

1000 MCM CABLE RISER

REVISIONS

R	DATE	ENGR	OPS
0	2/23/00	HWH	MA
1	12/29/04	LB	AH
2	1/13/10	CM	AH
3	12/9/22	CRM	GM

PAGE: 1 of 2

UPR1

CAD FILE: UPR1

APP:

DATE: 6/90

SECTION 1600

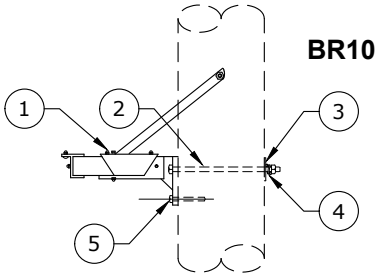

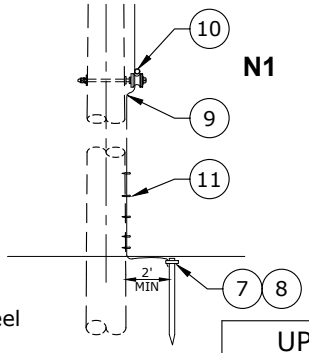

Rev 3 - Removed extra 2/0 Cu neutral for substation get-a-aways, changed to copper-clad steel grounds & added support grips and 4/0-2/0 crimpets.

ITEM NO.	DESCRIPTION	UPR1 BR10 QTY.	S/N
1	Bracket, Terminator, Mount, 48", 1000MCM	1	2842 ✲
2	Bolt, Machine, 5/8" x 14", Galv, 12,400 lb Ultimate Tensile	1	156
3	Washer, Curved, Square, Cast, 3" x 3" x 3/8" Thick x 13/16" Hole, Galv	1	1392
4	Washer, Lock, Spring, Double Coil, Galv, 5/8"	1	2217
5	Screw, Lag, 1/2" x 4 1/2", Twist Drive, Drive Point	3	1132
6	Support, Cable, 1000MCM	3	2229

ITEM NO.	DESCRIPTION	N1 QTY.	S/N
7	Rod, Ground, 5/8" x 8'	1	1124
8	Clamp, Ground Rod, 5/8", Small, Bronze	1	281
9	Conductor, Copper-Clad Steel, #4 Cu Equivalent, 40% Annealed, Black Jacket with Green Stripe	40✲	1512 ✲
10	Connector, H-Tap, Al/Cu, Run #2-2/0 Str - Tap #6-#1 Str	1	413
11	Staple, Ground Wire, Barbed, Galvanized, 1 1/2"	24	2707

ITEM NO.	DESCRIPTION	ADDITIONAL MATERIAL QTY.	S/N
12	Connector, Tap, Wedge, Run and Tap 336 ACSR to 397 AAC	3	2501
13	Conductor, OH, 600v, Cu, 2/0, 19-Str, XLPE, 80 mil, Soft-Drawn, 1C, RHW-2	30	381
14	Conductor, OH, AAC, 397.5, 19-Str, Bare, 1C, Canna	30	367
15	Terminator, 15kV, Cold-Shrink JCN, 1000MCM	3	2225
16	Arrester, Surge, 9 kV, MOV, Riser Pole	3	58
17	Connector, Compression, Lug, 2-hole, 336 ACSR & 397 AAC	3	438
18	Connector, Compression, Lug, Al/Cu, Tin-Plated, 1000MCM to NEMA 2-Hole	3	1501
19	Clamp, Hot Line, GP1530, Line #6 Sol - 400MCM, Tap #6 Sol - 4/0 Str Cu Only	3	284
20	Bolt, 1/2" x 2", w/ Flat and Belleville Washers, Assembly	6	1389
21	Conductor, OH, Cu, #4 Solid, Bare, Soft-Drawn, 1C	10	376
22	Screw, Lag, 1/2" x 4 1/2", Twist Drive, Drive Point	6	1132
23	Connector, Crimpet, Cu, Run 3/0 - 4/0 Str, Tap #6 Sol - #2 Str	3	458 ✲
24	Conduit, 4" x 10', Sch 80	90	2203
25	Clamp, Standoff Bracket, 4"	9	297
26	End Bell, 4", Sch 40, Long	3	2204
27	Conductor, OH, 600v, Cu, #2, 7-Str, XLPE, 60 mil, Soft-Drawn, 1C, RHW-2	15	393
28	Bracket, Standoff, 15" w/ Stop and Brace	3	227
29	Tag, Phase A	1	1280
30	Tag, Phase B	1	1281
31	Tag, Phase C	1	1282
32	Connector, Crimpet, Cu, Run and Tap 1/0 - 2/0 Str	2 ✲	457
33	Guard, Wildlife, Large, OH/UG Terminators	3	1676
34	Indicator, Fault, 400A, OH, Beacon w/ Signal Flag, Electric Field Reset	3	2558
35	Guard, Wildlife, Polymer Arrester	3	2583
36	Connector, Crimpet, Cu, Run 3/0 Str - 250 Str, Tap #6 Sol - 2/0 Str	3	459 ✲
37	Grip, Support, 4" Conduit, 1000MCM (1.625" to 2.5")	3	2521 ✲

Clark Public Utilities

CONSTRUCTION STANDARDS

1000 MCM CABLE RISER

REVISIONS

R	DATE	ENGR	OPS
0	2/23/00	HWH	MA
1	12/29/04	LB	AH
2	1/13/10	CM	AH
3	12/9/22	CRM	GM

PAGE: 2 of 2

UPR1

CAD FILE: UPR1

APP:

DATE: 6/90

SECTION 1600

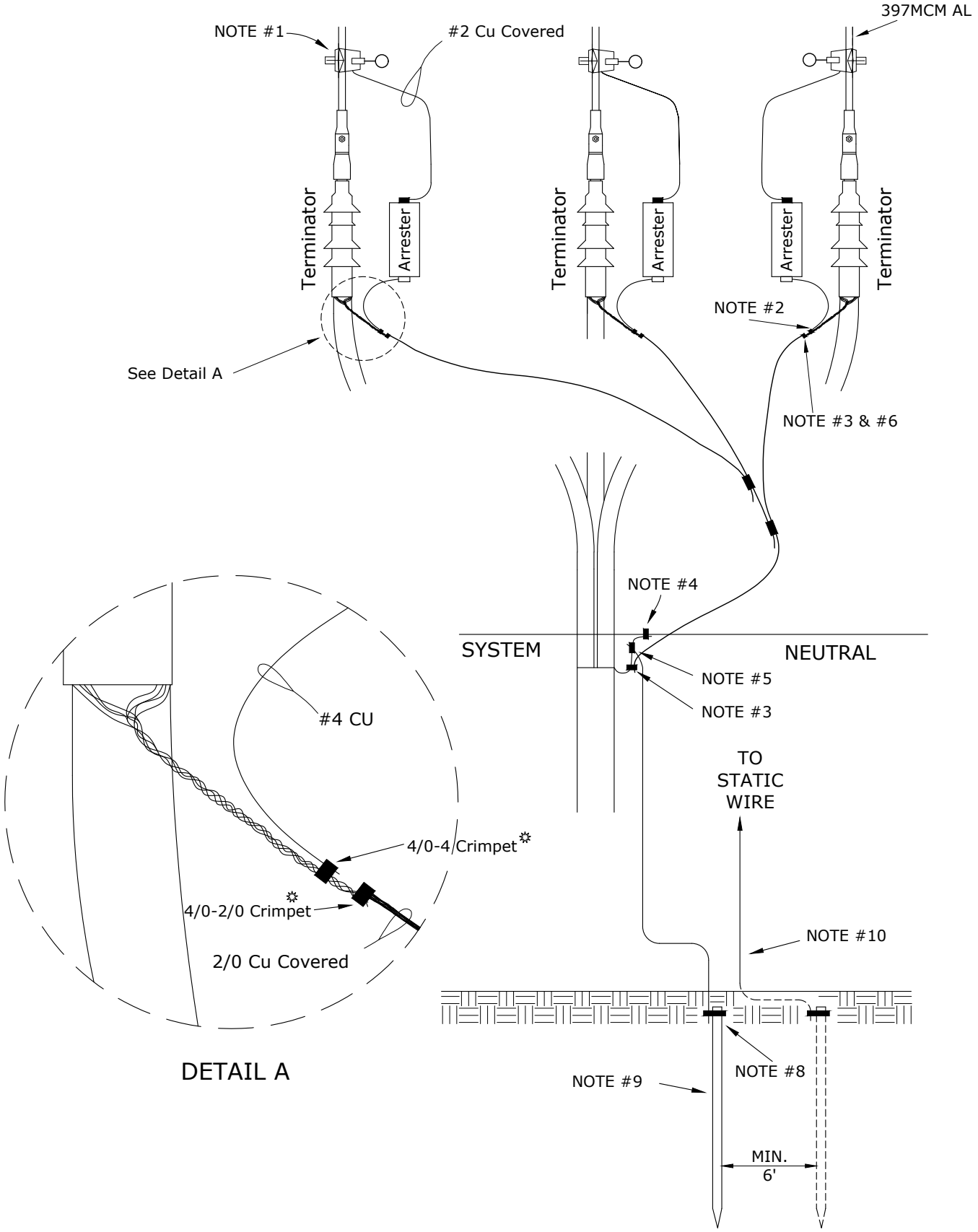

Rev 2 - Updated notes for 2023 NESC and changed to 4/0-2/0 crimpet.

Clark Public Utilities

CONSTRUCTION STANDARDS

1000 MCM CABLE RISER
GROUNDING DETAIL

REVISIONS

R	DATE	ENGR	OPS
0	2/23/00	HWH	MA
1	12/29/04	LB	AH
2	12/9/22	CRM	GM

PAGE:		CAD FILE:	APP:	SECTION
1 of 2	UPR2	UPR2	DATE: 6/90	1600

NOTES:

1. Make connections as close to terminator as possible but DO NOT make a sharp bend. Use hot line clamp for easy removal.

2. Connect surge arrester lead to concentric neutral.

3. Connect concentric neutral wires (twist together) to 2/0 stranded copper with 4/0-2/0✲ crimpet. Connect separate 2/0 runs, as per drawing, from each concentric neutral to the system neutral. Use 2/0 covered conductor and train this conductor back down along the 1000MCM cable for appearance.

4. Connect 2/0 copper riser neutral to system neutral only. This riser neutral is only used for substation get-a-ways. The 2/0 Cu riser neutral is only needed on old installations where the 1000MCM had less than 1/3 neutral per phase. Any get-a-way with a full neutral does not need the additional 2/0 Cu.✲

5. Use separate ground lead for system neutral grounding connection. Any other equipment grounds may be connected to this ground lead also per NESC 092B3.

6. Do not connect arrester grounds separately to system neutral. Connect to concentric neutral as near to the terminator as possible per NESC 097B.

7. Do not ground equipment mounting bracket per NESC 123A.

8. Top of ground rod must be buried per NESC 094C2a3. ✲

9. If more than one ground rod is required they must be separated by at least 6 feet per NESC 094C2a2.✲

10. Static wire ground when required. DO NOT connect to neutral. See TN1 to TN4 for static wire details.

Rev 2 - Updated notes for 2023 NESC and changed to 4/0-2/0 crimpet.

Clark Public Utilities

CONSTRUCTION STANDARDS

1000 MCM CABLE RISER GROUNDING DETAIL

REVISIONS

R	DATE	ENGR	OPS
0	2/23/00	HWH	MA
1	12/29/04	LB	AH
2	12/9/22	CRM	GM

PAGE: 2 of 2

UPR2

CAD FILE: UPR2

APP:

DATE: 6/90

SECTION 1600

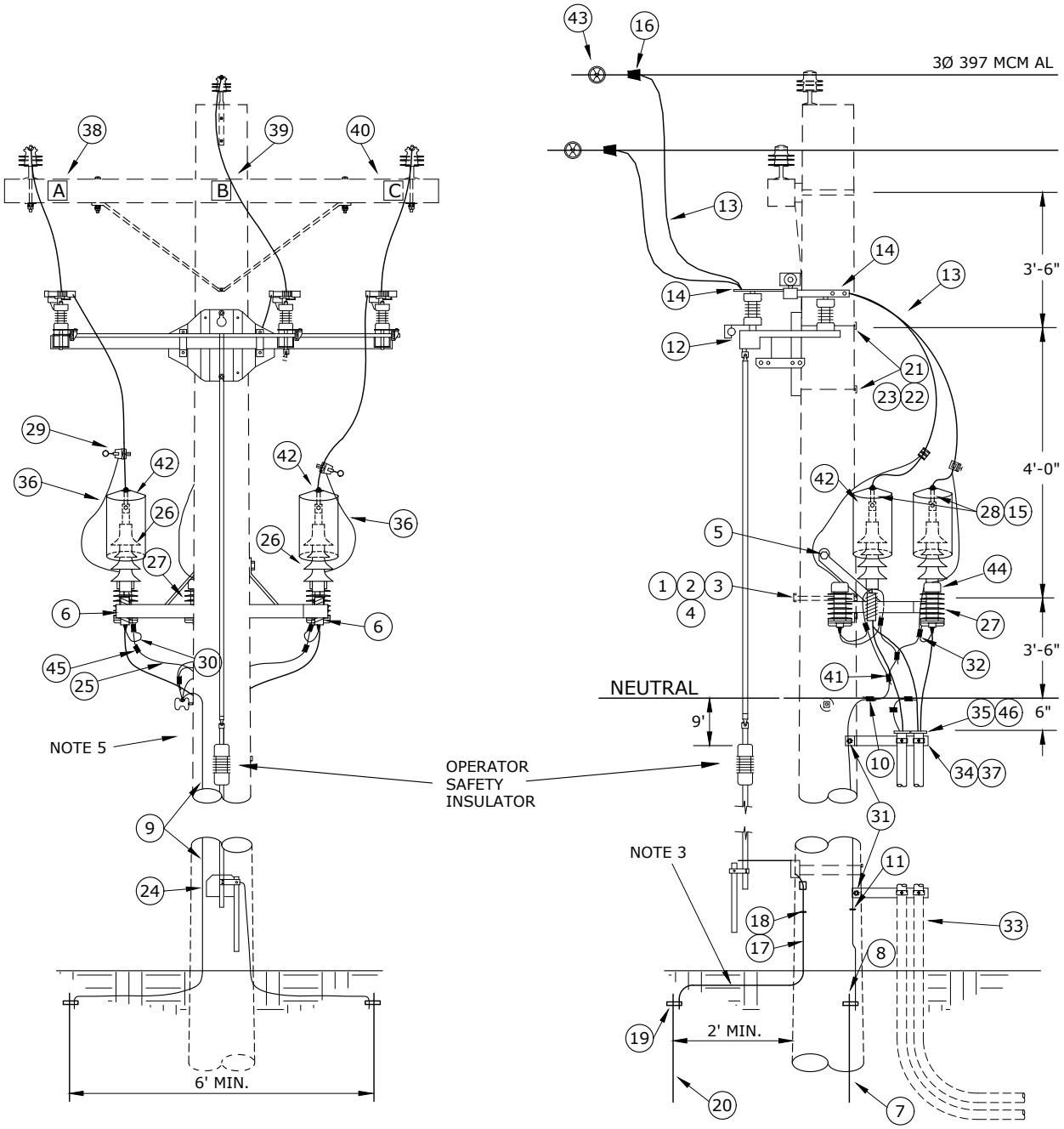

Notes:

1. This is the recommended 1000 MCM riser standard. See UPR1 or UPR5 when it is not possible to install a switch.
2. See UPR2 for grounding details.
3. All ground wire is #4 Cu equivalent covered copper-clad steel.
4. Avoid sharp turns in lightning arrester grounds and primary leads.
5. The pole must be 45' Class 2 or taller.
6. Static wire ground when required. DO NOT connect to neutral. See N2 for details. Engineer must call for static wire ground separately.

Rev 1 - Corrected material issue, changed to copper-clad steel, and added support grips and Note #6.

Clark Public Utilities

CONSTRUCTION STANDARDS

1000MCM CABLE RISER
WITH 3Ø SWITCH

REVISIONS			
R	DATE	ENGR	OPS
1	12/9/22	CRM	GM

PAGE: 1 of 3

UPR4

CAD FILE: UPR4

APP: CM/AH
DATE: 1/13/10

SECTION 1600

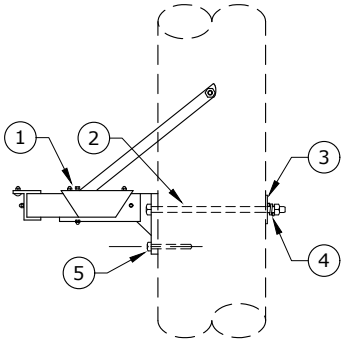

BR10

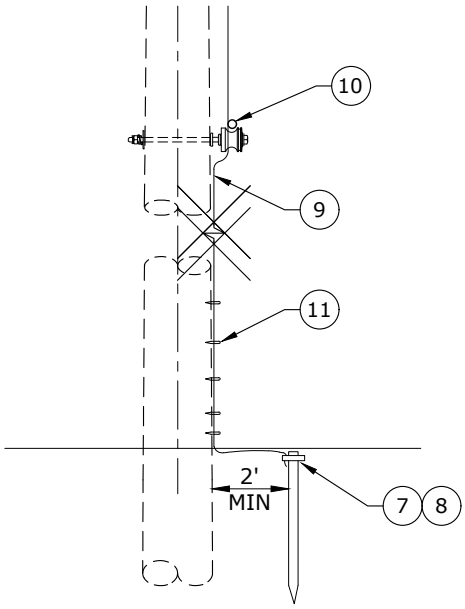

N1

Clark Public Utilities

CONSTRUCTION STANDARDS

1000MCM CABLE RISER
WITH 3Ø SWITCH

REVISIONS			
R	DATE	ENGR	OPS
1	12/9/22	CRM	GM

PAGE: 2 of 3

UPR4

CAD FILE: UPR4

APP: CM/AH

DATE: 1/13/10

SECTION 1600

Rev 1 - Corrected material issue, changed to copper-clad steel, and added support grips and Note #6.

UPR4

ITEM NO.	DESCRIPTION	BR10 QTY.	BR10 S/N
1	Bracket, Terminator, Mount, 48", 1000MCM	1	2842 ✲
2	Bolt, Machine, 5/8" x 14", Galv, 12,400 lb Ultimate Tensile	1	156
3	Washer, Curved, Square, Cast, 3" x 3" x 3/8" Thick x 13/16" Hole, Galv	1	1392
4	Washer, Lock, Spring, Double Coil, Galv 5/8"	1	2217
5	Screw, Lag, 1/2" x 4 1/2", Twist Drive, Drive Point	3	1132
6	Support, Cable, 1000MCM	3	2229

ITEM NO.	DESCRIPTION	N1 QTY.	N1 S/N
7	Rod, Ground, 5/8" x 8'	1	1124
8	Clamp, Ground Rod, 5/8", Small, Bronze	1	281
9	Conductor, Copper-Clad Steel, #4 Cu Equivalent, 40% Annealed, Black Jacket with Green Stripe	40✲	1512 ✲
10	Connector, H-Tap, Al/Cu, Run #2 - 2/0 Str, Tap #6 - #1 Str	1	413
11	Staple, Ground Wire, Barbed, Galvanized, 1 1/2"	24	2707 ✲

ITEM NO.	DESCRIPTION	ADDITIONAL MATERIAL QTY.	ADDITIONAL MATERIAL S/N
12	Switch, Loadbreak, Horizontal, 600A, 15kV	1	2432
13	Conductor, OH, AAC, 397.5, 19-Str, Bare, 1C, Canna	60	367
14	Connector, Compression, Lug, 2-Hole, 336 ACSR and 397 AAC	6	438
15	Bolt, 1/2" x 2", w/ Flat and Belleville Washers, Assembly	6 ✲	1389
16	Connector, Tap, Wedge, Run and Tap 336 ACSR - 397 AAC	3	2501
17	Conductor, Copper-Clad Steel, #4 Cu Equivalent, 40% Annealed, Black Jacket with Green Stripe	20	1512 ✲
18	Staple, Ground Wire, Barbed, Galvanized, 1 1/2"	5	2707 ✲
19	Clamp, Ground Rod, 5/8", Small, Bronze	1	281
20	Rod, Ground, 5/8" x 8'	1	1124
21	Machine Bolt, 3/4" x 16" Galv., 18,350 lbs. Ultimate Tensile	2	175
22	Washer, Curved, Cast, 4" x 4" with 13/16" Hole	2	1910
23	Washer, Lock Spring, Double Coil, Galv. 3/4"	2	2218
24	Lock, Padlock, 2" Hardened Stainless Steel Shackle	1	2564
25	Conductor, OH, 600v, Cu, 2/0, 19-Str, XLPE, 80 mil, Soft-Drawn, 1C, RHW-2	60	381
26	Terminator, 15kV, Cold-Shrink JCN, 1000 MCM	3	2225
27	Arrester, Surge, 9kV, MOV, Riser Pole	3	58
28	Connector, Compression, Lug, Al/Cu, Tin-Plated, 1000MCM to NEMA 2-Hole	3	1501
29	Clamp, Hot Line, GP 1530, Line #6 Sol - 400MCM, Tap #6 Sol - 4/0 Str Cu Only	3	284
30	Conductor, OH, Cu, #4 Solid, Bare, Soft-Drawn, 1C	10	376
31	Screw, Lag, 1/2" x 4 1/2", Twist Drive, Drive Point	9	1132
32	Connector, Crimpet, Cu, Run 3/0 - 4/0 Str, Tap #6 Sol - #2 Str	3 ✲	458 ✲
33	Conduit, 4" x 10', Sch 80	90✲	2203
34	Clamp, Standoff Bracket, 4"	9	297
35	End Bell, 4" Sch 40, Long	3	2204
36	Conductor, OH, 600v, Cu, #2, 7-Str, XLPE, 60 mil, Soft-Drawn, 1C, RHW-2	15	393
37	Bracket, Standoff, 15" with Stop and Brace	3	227
38	Tag, Phase A	1	1280
39	Tag, Phase B	1	1281
40	Tag, Phase C	1	1282
41	Connector, Crimpet, Cu, Run and Tap 1/0 - 2/0 Str	2 ✲	457
42	Guard, Wildlife, Large, OH/UG Terminators	3	1676 ✲
43	Indicator, Fault, 400A, OH, Beacon with Signal Flag, Electric Field Reset	3	2558
44	Guard, Wildlife, Polymer Arrester	3	2583✲
45	Connector, Crimpet, Cu, Run 3/0 Str - 250 Str, Tap #6 Sol - 2/0 Str	3	459 ✲
46	Grip, Support, 4" Conduit, 1000MCM (1.625" to 2.5")	3	2521✲

Clark Public Utilities

CONSTRUCTION STANDARDS

1000MCM CABLE RISER
WITH 3Ø SWITCH

REVISIONS

R	DATE	ENGR	OPS
1	12/9/22	CRM	GM

PAGE: 3 of 3

UPR4

CAD FILE: UPR4

APP: CM/AH

DATE: 1/13/10

SECTION 1600

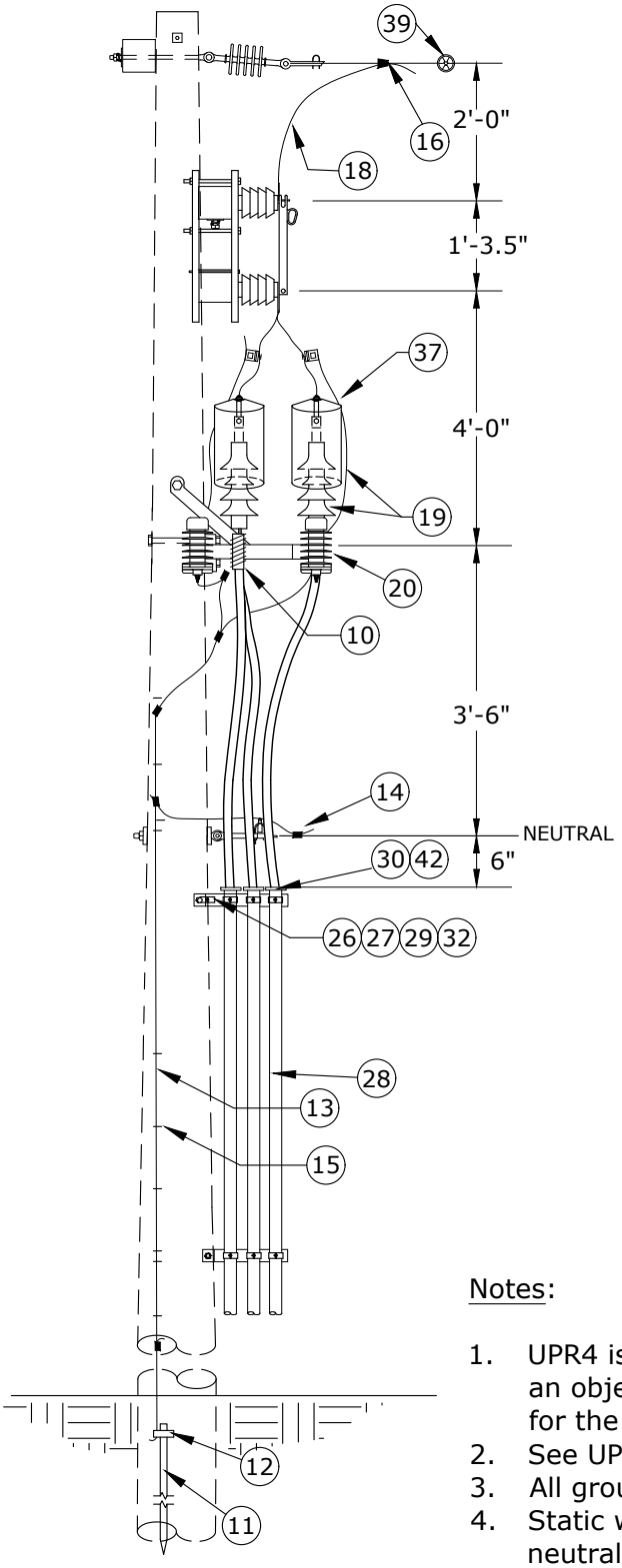

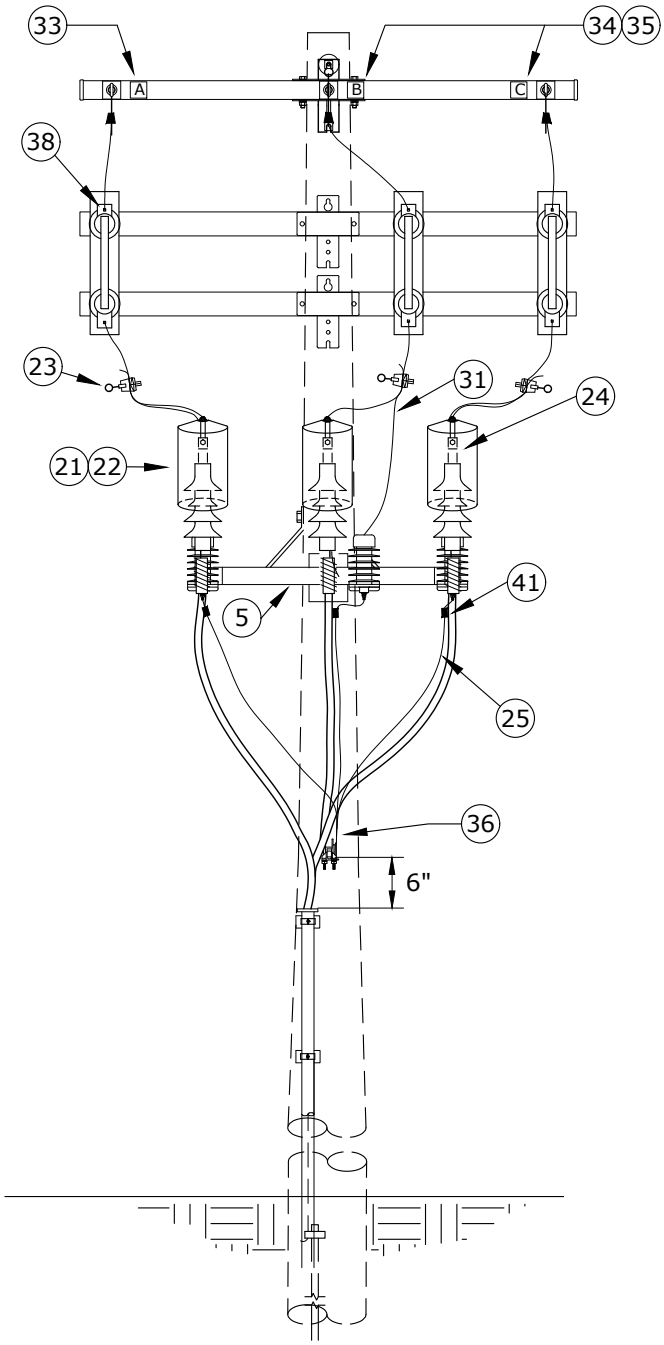

Notes:

1. UPR4 is the preferred standard. This standard is to be used if an object interferes w/ the switch handle of UPR4. See UPR4 for the recommended construction.
2. See UPR2 for grounding details.
3. All ground wire is #4 covered copper-clad steel.
4. Static wire ground when required. DO NOT connect to neutral. See N2 for static wire details. Engineer must call for static wire ground separately.
5. Avoid sharp turns in arrester grounds and primary leads.
6. 2/0 CU from terminators to overhead neutral for all 1000MCM construction.

Rev 1 - Removed extra 2/0 Cu neutral for substation get-a-ways, added 4/0-2/0 crimpet and support grips, and changed ground to Cu-clad steel grounds.

Clark Public Utilities

CONSTRUCTION STANDARDS

1000MCM CABLE RISER
WITH 600 AMP DISCONNECTS

REVISIONS

R	DATE	ENGR	OPS
1	12/9/22	CRM	GM

PAGE: 1 of 3

UPR5

CAD FILE: UPR5

APP: CM/AH
DATE: 1/13/10

SECTION 1600

CR23B

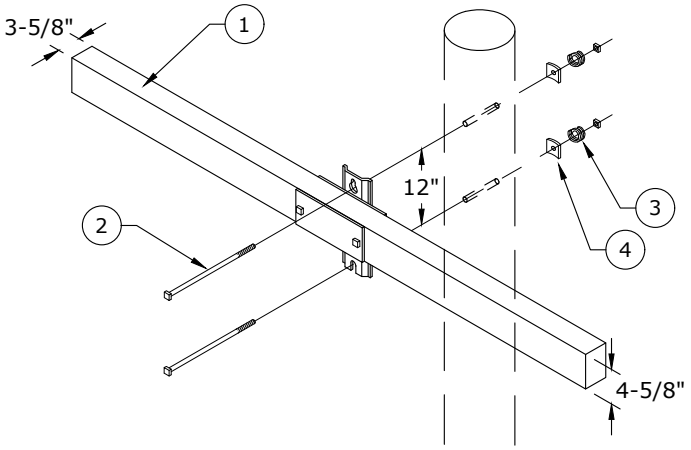

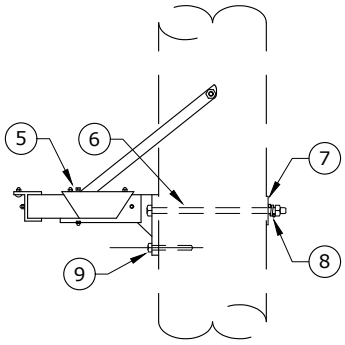

BR10

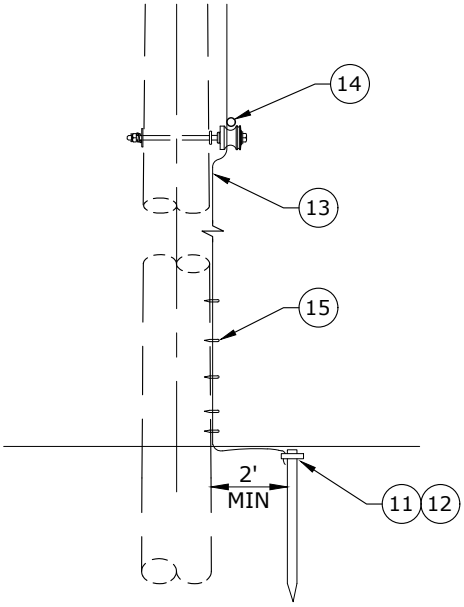

N1

Rev 1 - Removed extra 2/0 Cu neutral for substation get-a-ways, added 4/0-2/0 crimpets and support grips, and changed ground to Cu-clad steel grounds.

Clark Public Utilities

CONSTRUCTION STANDARDS

1000MCM CABLE RISER
WITH 600 AMP DISCONNECTS

REVISIONS

R	DATE	ENGR	OPS
1	12/9/22	CRM	GM

PAGE: 2 of 3

UPR5

CAD FILE: UPR5

APP: CM/AH

DATE: 1/13/10

SECTION 1600

Rev 1 - Removed extra 2/0 Cu neutral for substation get-a-ways, added 4/0-2/0 crimpets and support grips, and changed ground to Cu-clad steel grounds.

ITEM NO	DESCRIPTION	UPR5 CR23B (2) QTY	S/N
1	Crossarm, Distribution, Fiberglass, 10' Long x 3-5/8" Wide x 4-5/8" Tall	2	3031 ✲
2	Bolt, Machine, 5/8" x 14", Galv., 12,400 lb Ultimate Tensile	4	156 ✲
3	Washer, Lock, Spring, Double Coil, Galv, 5/8"	4	2217 ✲
4	Washer, Curved, Square, Cast, 3" x 3" x 3/8" Thick x 13/16" Hole	4	1392 ✲
ITEM NO	**DESCRIPTION**	**BR10 QTY**	**S/N**
5	Bracket, Terminator, Mount, 48", 1000MCM	1	2842 ✲
6	Bolt, Machine, 5/8" x 14", Galv, 12,400 lb Ultimate Tensile	1	156
7	Washer, Curved, Square, Cast, 3" x 3" x 3/8" Thick x 13/16" Hole, Galv	1	1392
8	Washer, Lock, Spring, Double Coil, Galv, 5/8"	1	2217
9	Screw, Lag, 1/2" x 4 1/2", Twist Drive, Drive Point	3	1132
10	Support, Cable, 1000MCM	3	2229
ITEM NO	**DESCRIPTION**	**N1 QTY**	**S/N**
11	Rod, Ground, 5/8" x 8'	1	1124
12	Clamp, Ground Rod, 5/8", Small, Bronze	1	281
13	Conductor, Copper-Clad Steel, #4 Cu Equivalent, 40% Annealed, Black Jacket with Green Stripe	40✲	1512 ✲
14	Connector, H-Tap, Al/Cu, Run #2 - 2/0 Str, Tap #6 - #1 Str	1	413
15	Staple, Ground Wire, Barbed, Galvanized, 1 1/2"	24✲	2707 ✲
ITEM NO	**DESCRIPTION**	**ADDITIONAL MATERIAL QTY**	**S/N**
16	Connector, Tap, Wedge, Run and Tap 336 ACSR and 397 AAC	3	2501
17	Conductor, OH, 600v, Cu, 2/0, 19-Str, XLPE, 80 mil, Soft-Drawn, 1C, RHW-2	30	381
18	Conductor, OH, AAC, 397.5, 19-Str, Bare, 1C, Canna	30	367
19	Terminator, 15kV, Cold-Shrink JCN, 1000MCM	3	2225
20	Arrester, Surge, 9 kV, MOV, Riser Pole	3	58
21	Connector, Compression, Lug, 2-Hole, 336 ACSR and 397 AAC	3	438
22	Connector, Compression, Lug, Al/Cu, Tin-Plated, 1000MCM to NEMA 2-Hole	3	1501
23	Clamp, Hot Line, GP1530, Line #6 Sol - 400MCM, Tap #6 Sol - 4/0 Str, Cu Only	3	284
24	Bolt, 1/2" x 2", w/ Flat and Belleville Washers, Assembly	6	1389
25	Conductor, OH, Cu, #4 Solid, Bare, Soft-Drawn, 1C	10	376
26	Screw, Lag, 1/2" x 4 1/2", Twist Drive, Drive Point	9	1132
27	Connector, Crimpet, Cu, Run 3/0 - 4/0 Str, Tap #6 Sol - #2 Str	3	458 ✲
28	Conduit, 4" x 10', Sch 80	90✲	2203
29	Clamp, Standoff Bracket, 4"	9	297
30	End Bell, 4", Sch 40, Long	3	2204
31	Conductor, OH, 600v, Cu, #2, 7-Str, XLPE, 60 mil, Soft-Drawn, 1C, RHW-2	15	393
32	Bracket, Standoff, 15" with Stop and Brace	3	227
33	Tag, Phase A	1	1280
34	Tag, Phase B	1	1281
35	Tag, Phase C	1	1282
36	Connector, Crimpet, Cu, Run and Tap 1/0 - 2/0 Str	2 ✲	457
37	Guard, Wildlife, Large, OH/UG Terminators	3	1676
38	Disconnect, 600 Amp, Single Blade	3	2531
39	Indicator, Fault, 400A, OH, Beacon with Signal Flag, Electric Field Reset	3	2558
40	Guard, Wildlife, Polymer Arrester	3	2583
41	Connector, Crimpet, Cu, Run 3/0 Str - 250 Str, Tap #6 Sol - 2/0 Str	3	459 ✲
42	Grip, Support, 4" Conduit, 1000MCM (1.625" to 2.5")	3	2521✲

Clark Public Utilities

CONSTRUCTION STANDARDS

1000MCM CABLE RISER
WITH 600 AMP DISCONNECTS

REVISIONS

R	DATE	ENGR	OPS
1	12/9/22	CRM	GM

PAGE: 3 of 3

UPR5

CAD FILE: UPR5

APP: CM/AH
DATE: 1/13/10

SECTION 1600

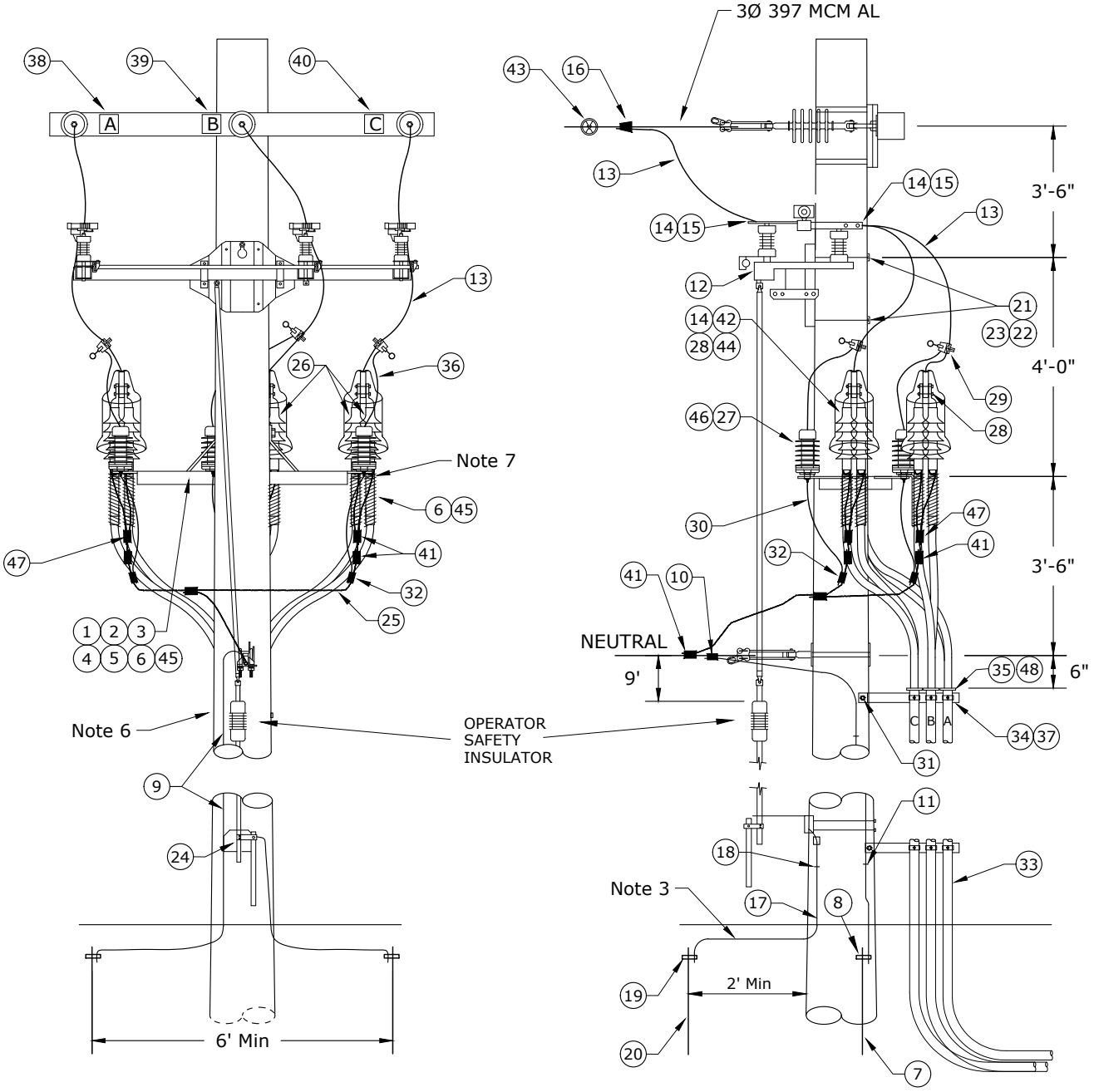

Notes:

1. This is the recommended 1000MCM riser standard for parallel runs.
2. See UPR2 for grounding details.
3. All ground wire is #4 Cu equivalent covered copper-clad steel.
4. Engineer must call for static wire ground separately, if needed. DO NOT connect to neutral. See N2 for details.
5. Avoid sharp turns in arrester ground and primary leads.
6. The pole must be 45' Class 2 or taller.
7. Install the cable positioners and arresters to the 48" equipment mounting brackets using carriage bolts provided with bracket.
8. 2/0 Cu from terminators to OH neutral for all 1000MCM.

Rev 1 - Added 4/0-2/0 crimpets and support grips.

Clark Public Utilities

CONSTRUCTION STANDARDS

PARALLEL 1000MCM CABLE RISER
WITH 3Ø SWITCH

REVISIONS

R	DATE	ENGR	OPS
1	12/9/22	CRM	GM

PAGE: 1 of 3

UPR6

CAD FILE: UPR6

APP: CM/DK

DATE: 11/2/18

SECTION 1600

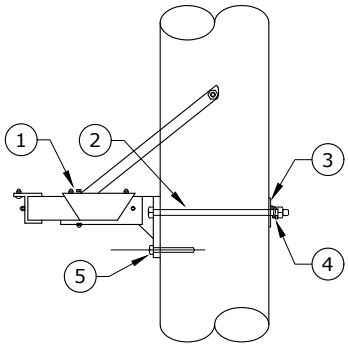

BR10

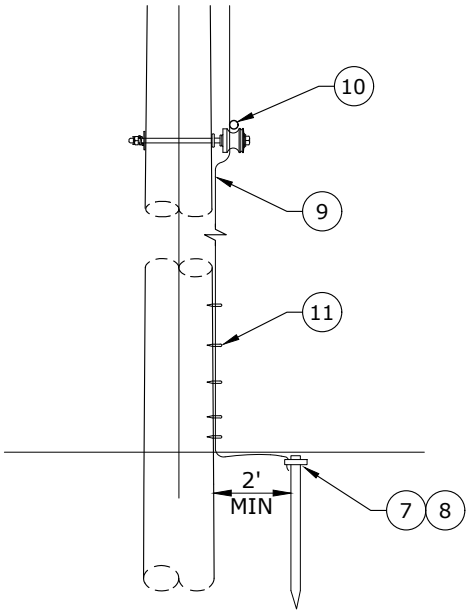

N1

Rev 1 - Added 4/0-2/0 crimpets and support grips.

ITEM NO.	DESCRIPTION	UPR6 BR10 QTY.	S/N
1	Bracket, Terminator Mount, 48", 1000 MCM Cable	1	2842
2	Bolt, Machine, 5/8" x 14", Galv., 12,400 lbs Ultimate Tensile	1	156
3	Washer, Curved, Square, Cast, 3" x 3" x 3/8" Thick x 13/16" Hole, Galv	1	1392
4	Washer, Lock, Spring, Double Coil Galv., 5/8"	1	2217
5	Screw, Lag, 1/2" x 4 1/2", Twist Drive, Drive Point	3	1132
6	Support, Cable, 1000 MCM	3	2229

ITEM NO.	DESCRIPTION	N1 QTY.	S/N
7	Rod, Ground, 5/8" x 8'	1	1124
8	Clamp, Ground Rod, 5/8", Small, Bronze	1	281
9	Conductor, Copper-Clad Steel, #4 Cu Equivalent, 40% Annealed, Black Jacket with Green Stripe	40	1512
10	Connector, H-Tap, Al/Cu, Run #2 - 2/0 Str, Tap #6 - #1 Str	1	413
11	Staple, Ground, Barbed, Galvanized, 1 1/2"	24	2707

Clark Public Utilities

CONSTRUCTION STANDARDS

PARALLEL 1000MCM CABLE RISER
WITH 3Ø SWITCH

REVISIONS

R	DATE	ENGR	OPS
1	12/9/22	CRM	GM

PAGE: 2 of 3

UPR6

CAD FILE: UPR6

APP: CM/DK

DATE: 11/2/18

SECTION 1600

ITEM NO.	DESCRIPTION	UPR6 ADDITIONAL MATERIAL QTY.	S/N
12	Switch, Loadbreak, Horizontal, 900A, 15kV	1	2432
13	Conductor, OH, AAC, 397.5, 19-Str, Bare, 1C, Canna	60	367
14	Connector, Compression, Lug, 2-Hole, 336 ACSR and 397 AAC	9	438
15	Bolt, 1/2" x 2", w/ Flat & Belleville Washers , Assembly	12	1389
16	Connector, Tap, Wedge, Run and Tap 336 ACSR - 397 AAC	3	2501
17	Conductor, Copper-Clad Steel, #4 Cu Equivalent, 40% Annealed, Black Jacket with Green Stripe	20	1512
18	Staple, Ground, Barbed, Galv, 1 1/2"	5	2707
19	Clamp, Ground Rod, 5/8", Small, Bronze	1	281
20	Rod, Ground, 5/8" x 8'	1	1124
21	Bolt, Machine, 3/4" x 16", Galv, 18,300 lb Ultimate Tensile	2	175
22	Washer, Curved, Cast, 4" x 4" w/ 13/16" Hole	2	1910
23	Washer, Lock, Spring, Double Coil Galv, 3/4"	2	2218
24	Lock, Padlock, 2" Hardened Stainless Steel Shackle	1	2564
25	Conductor, OH, 600v, Cu, 2/0, 19-Str, XLPE, 80 mil, Soft-Drawn, 1C, RHW-2	60	381
26	Terminator, 15 kV, Cold-Shrink JCN, 1000 MCM	6	2225
27	Arrester, Surge, 9 kV, MOV, Riser Pole	3	58
28	Connector, Compression, Lug, Al/Cu, Tin-Plated, 1000 MCM to NEMA 2-Hole	6	1501
29	Clamp, Hot Line, GP 1530, Line #6 Sol - 400MCM, Tap #6 Sol - 4/0 Str, Cu Only	3	284
30	Conductor, OH, Cu, #4 Solid, Bare, Soft-Drawn, 1C	10	376
31	Screw. Lag, 1/2" x 4 1/2", Twist Drive, Drive Point	6	1132
32	Connector, Crimpet, Cu, Run 3/0 - 4/0 Str, Tap #6 Sol - #2 Str	6	458 ✲
33	Conduit, 4" x 10', Sch 80	180	2203
34	Clamp, Standoff Bracket, 4"	18	297
35	End Bell, 4" Sch 40, Long	6	2204
36	Conductor, OH, 600v, Cu, #2, 7-Str, XLPE, 60 mil, Soft-Drawn, 1C, RHW-2	15	393
37	Bracket, Standoff, Riser, 24" with Stop and Brace	3	228
38	Tag, Phase A	1	1280
39	Tag, Phase B	1	1281
40	Tag, Phase C	1	1282
41	Connector, Crimpet, Cu, Run and Tap 1/0 - 2/0 Str	6 ✲	457
42	Guard, Wildlife, Large OH/UG Terminators	3	1676
43	Indicator, Fault, 400A, OH, Beacon with Signal Flag, Electric Field Reset	3	2558
44	Bolt, 1/2" x 2-1/2", w/ Flat & Belleville Washers, Assembly	6	2584
45	Support, Cable, 1000 MCM	3	2229
46	Guard, Wildlife, Polymer Arrester	3	2583
47	Connector, Crimpet, Cu, Run 3/0 Str - 250 Str, Tap #6 Sol - 2/0 Str	6	459 ✲
48	Grip, Support, 4" Conduit, 1000MCM (1.625" to 2.5")	6	2521 ✲

Clark Public Utilities

CONSTRUCTION STANDARDS

PARALLEL 1000MCM CABLE RISER
WITH 3Ø SWITCH

REVISIONS

R	DATE	ENGR	OPS
1	12/9/22	CRM	GM

PAGE: 3 of 3

UPR6

CAD FILE: UPR6

APP: CM/DK

DATE: 11/2/18

SECTION 1600

ASSEMBLY DIAGRAM
ONE ASSEMBLY PER 600A PHASE

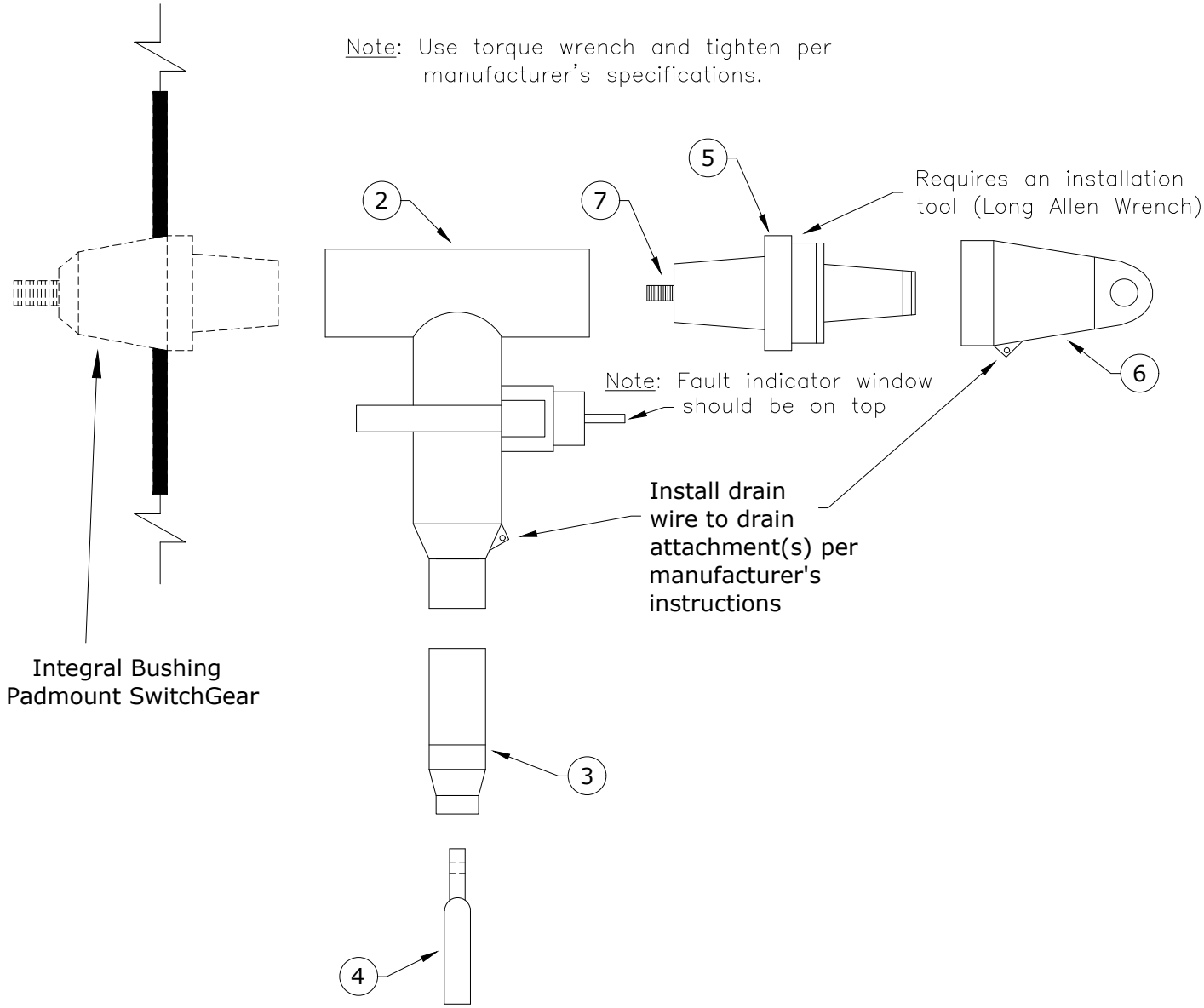

Rev 3: Added torque requirements and material corrections.

ITEM NO.	DESCRIPTION	USG1 QTY.	USG1 S/N
1	600A Elbow Kit For Switchgear	1	2692
	Each Kit Consists Of #2 to #7:		
2	*Housing, Elbow, 600A*	1	1825
3	*Adapter, Cable, 1000 MCM*	1	1
4	*Contact, Compression, 1000 MCM, Al, Non-Threaded Hole*	1	941
5	*Plug, Loadbreak Reducing Tap, 600A-200A*	1	1769
6	*Cap, Protective Insulated, 200A, 15kV*	1	265
7	*Stud, Al, 600A, T-Body to Reducer Plug*	1	2704
8	600A Elbow Sealing Kit	1	2376

Clark Public Utilities

CONSTRUCTION STANDARDS

PADMOUNT SWITCHGEAR
600 AMP ELBOW - 1000MCM CABLE

REVISIONS

R	DATE	ENGR	OPS
0	2/23/00	HWH	MA
1	1/11/04	LB	AH
2	4/29/09	CM	AH
3	12/5/19	CM	GM

PAGE: 1 of 1

USG1

CAD FILE: USG1

APP: GGW/RWG
DATE: 6/90

SECTION 1600

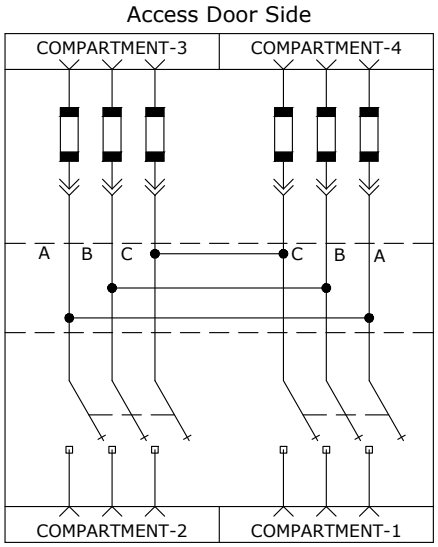

PME9

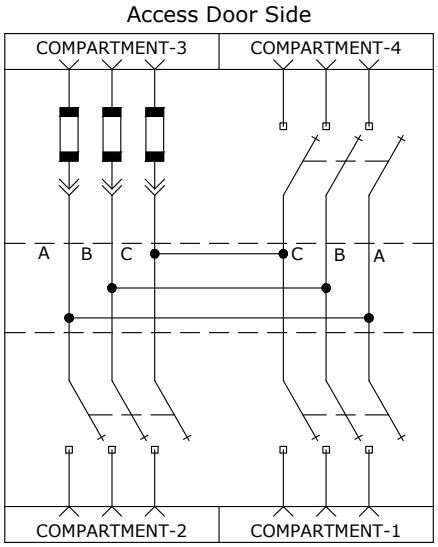

PME11

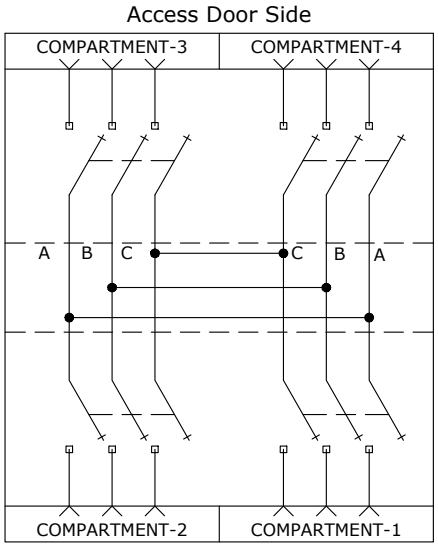

PME10

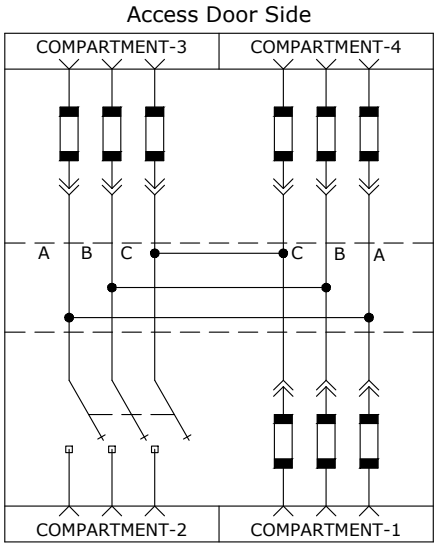

PME12

PADMOUNT DEADFRONT	PADMOUNT LIVEFRONT (Maintenance only)	600 AMP 3ø SWITCH	200 AMP 3ø POSITIONS
PME9	PMH9	2	2
PME10	PMH10	4	0
PME11	PMH11	3	1
PME12	PMH12	1	3

FUSE SIZE (SMU)	S/N
65E	2770
100E	2771
125E	2772

Contact Systems Engineering for proper fuse coordination.

Notes:

1. Material issue has the maximum number of fault indicators that may be used. Engineer to determine the actual number needed.
2. All new PMEs are ordered with the required number of 100E fuses for the configuration plus 3 spare 100E fuses.
3. If 65E or 125E fuses are required, the Engineer will have to call for the number needed plus 3 spares.

Rev. 4 - Changed to PME and PMH nomenclature, SMU fuses, removed separate fuse holders, added tie-downs, changed to 612 vault, and updated materials.

Clark Public Utilities

CONSTRUCTION STANDARDS

PADMOUNT SWITCHGEAR CHART

USE WITH STANDARD USG3

REVISIONS

R	DATE	ENGR	OPS
1	1/11/04	LB	AH
2	10/7/05	LB	AH
3	4/29/09	CM	AH
4	12/5/19	CM	GM

PAGE: 1 of 2

USG2

CAD FILE: USG2

APP: HWH/MA

DATE: 2/22/00

SECTION 1600

Rev. 4 - Changed to PME and PMH nomenclature, SMU fuses, removed separate fuse holders, added tie-downs, changed to 612 vault, and updated materials.

DEADFRONT (CPU Standard)

ITEM NO.	DESCRIPTION	S/N	PME9 QTY	PME10 QTY	PME11 QTY	PME12 QTY
1	Switch, Padmount, PME9, 2-600A Switches & 2-200A Fused Taps	2458	1	–	–	–
	PME10, 4-600A Switches	2452	–	1	–	–
	PME11, 3-600A Switches & 1-200A Fused Taps	2459	–	–	1	–
	PME12, 1-600A Switches & 3-200A Fused Taps	CONTACT STANDARDS ENGINEERING - NOT STOCKED				
2	600A Elbow Kit For Switchgear (USG1 Kit)	2692	6	12	9	3
	Each Kit Consists Of #3 to #8:					
3	*Housing, Elbow, 600A*	1825	6	12	9	3
4	*Adapter, Cable, 1000 MCM*	1	6	12	9	3
5	*Contact, Compression, 1000 MCM, Al, Non-Threaded Hole*	941	6	12	9	3
6	*Plug, Loadbreak Reducing Tap, 600A-200A*	1769	6	12	9	3
7	*Cap, Protective Insulated, 200A, 15kV*	265	6	12	9	3
8	*Stud, Al, 600A, T-Body to Reducer Plug*	2704	6	12	9	3
9	Elbow, Sealing Kit, 1000MCM 175 & 220 mil	2376	6	12	9	3
10	Conductor, Cu, 2/0, 1C, 7-Str, Bare, Soft Drawn	379	40	50	45	35
11	Connector, Crimpet, Cu, Run 4/0 Str, Tap 1/0 - 2/0 Str	459	6	12	9	3
12	Connector, Crimpet, Cu, Run 1/0 - 2/0 Str, Tap 1/0 - 2/0 Str	457	2	4	3	1
13	Indicator, Fault, UG, 800A, Test-Point, Voltage-Reset, 3-phase	2695	1	3	2	–
14	Elbow, 200A, LB, 1/0, 175 & 220 mil, Test Point, 15 kV, Jacket Seal	1312	6	-	3	9
15	Cap, Protective, Insulated, 200A 15 kV	265	6	-	3	9
16	Bushing, Standoff, Insulated, 200A	252	6	-	3	9
17	Connector, Crimpet, Cu, Run & Tap #2 Sol/Str (2C2)	455	6	-	3	9
18	Connector, Crimpet, Cu, Run 1/0 - 2/0 Str, Tap #8 Sol - #2 Str	456	2	-	1	3
19	Strut, Slotted, 10', 1-5/8" x 1-5/8", 12 Ga Galv	2958	1	2	2	1
20	Anchor, Sleeve, 1/2" x 3", Stainless Steel, 3/8" Thread	2959	4	8	8	4
21	Washer, Flat, 3/8", (304) Stainless Steel	1398	4	8	8	4
22	Bracket, Wall Mount, Strut, 2-Hole, Galv	2960	2	4	4	2
23	Clamp, Cable, Strut, 1000 MCM, Mount	2961	6	12	9	3
24	Bolt, Machine, 1/2" x 1", (304) Stainless Steel	130	14	16	16	14
25	Nut, Spring-Loaded, Galv, 1/2" (Unistrut)	920	14	16	16	14

LIVEFRONT (Non-standard)

ITEM NO.	DESCRIPTION	S/N	PMH9 QTY	PMH10 QTY	PMH11 QTY	PMH12 QTY
1	Bolt, Machine, 1/2" x 2", SS	132	24	24	24	24
2	Clamp, Ground Rod	282	2	2	2	2
3	Conductor, 2/0 BC, 7 STR	379	50	50	50	50
4	Connector, Comp Lug YCA26-2NCU 2/0	431	6	–	3	9
5	Connector, Crimpet, 2/0 - 2/0	457	4	4	4	4
6	Rod, Ground, 5/8" x 8'	1124	2	2	2	2
7	2" x 1/2" Bolt Assembly	1389	24	24	24	24
8	Connector, Comp Lug, YA44-A3AL/CU 1000 MCM	1501	6	12	9	3
9	Vault, Concrete, 600 AMP SW, Mod. U-J-6	1541	1	1	1	1
10	Terminator, Outdoor, Molded Rubber 1/0	2214	6		3	9
11	Terminator, Outdoor, Butyl, 600 AMP, 1000 MCM	2225	6	12	9	3
12	Switch, Padmt, Linefront, PMH9		(#1265)	(#1264)	(#1468)	(#1471)
13	Holder, Fuse, Padmount, Livefront	745	6	–	3	9
14	Fault Indicator, 800A, Current-Reset, Beacon	2463	1	3	2	–
15	Caulk, Switchgear	2604	1	1	1	1

OBSOLETE

Clark Public Utilities

CONSTRUCTION STANDARDS

PADMOUNT SWITCHGEAR CHART

USE WITH STANDARD USG3

REVISIONS

R	DATE	ENGR	OPS
1	1/11/04	LB	AH
2	10/7/05	LB	AH
3	4/29/09	CM	AH
4	12/5/19	CM	GM

USG2

CAD FILE: USG2

APP: HWH/MA

DATE: 2/22/00

SECTION 1600

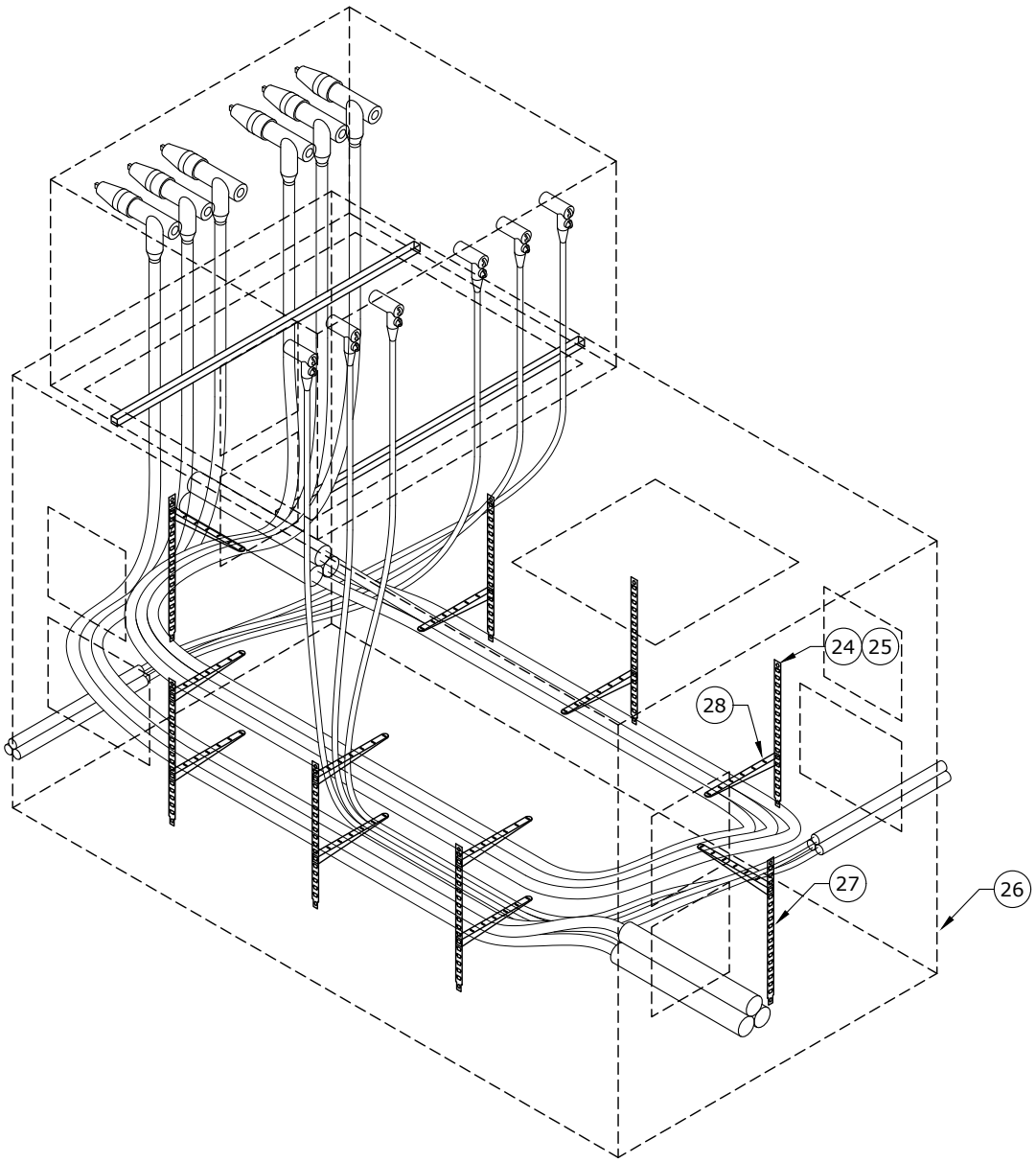

Notes:

1. Cable clamps required on 600A ways and not required on 200A ways. Install strut and cable clamps after setting switchgear to precisely land elbows on bushings.
2. Seal vacant conduits with reusable expanding duct plugs.
   2" - S/N 2955
   4" - S/N 2943
   Seal conduits with cable using inflatable seals.
   2" - S/N 2952
   4" - S/N 2943
3. For PME9 and PME12, face switchgear side with two fuse bays toward access door.
4. Engineer to call for temporary lid (S/N 2495) when switch and vault installed separately.

Rev. 4 - Fixed stock number in Note 4 for temporary lid.

Clark Public Utilities

CONSTRUCTION STANDARDS

DEADFRONT SWITCHGEAR
612 VAULT DETAIL
USE WITH STANDARD USG2

REVISIONS

R	DATE	ENGR	OPS
1	1/11/04	LB	AH
2	10/7/05	LB	AH
3	12/5/19	CM	GM
4	9/16/21	JDK	

PAGE: 1 of 6

USG3

CAD FILE: USG3

APP: HWH/MA
DATE: 2/22/00

SECTION 1600

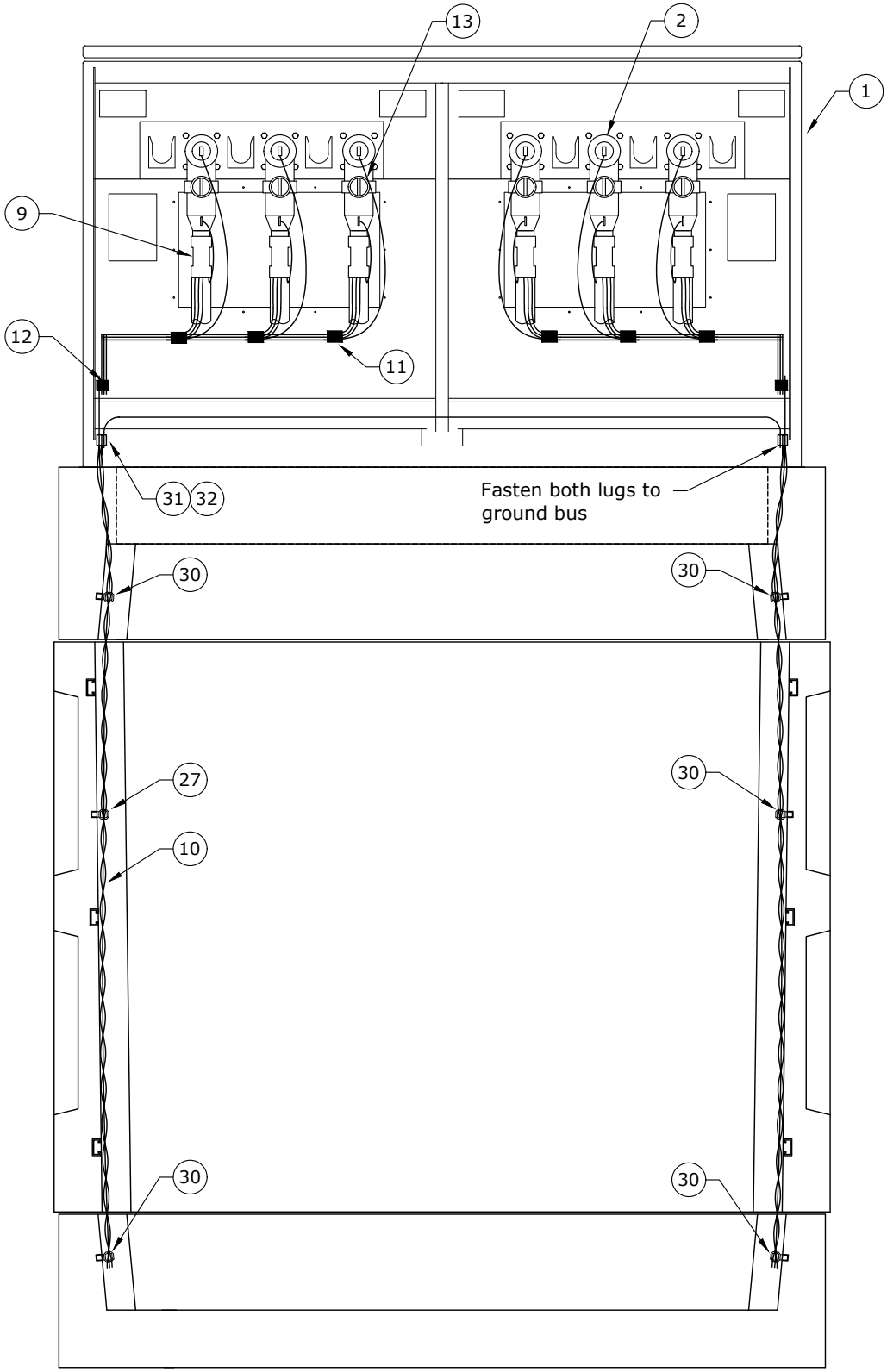

600A Elbow Detail

Rev. 4 - Fixed stock number in Note 4 for temporary lid.

Clark Public Utilities

CONSTRUCTION STANDARDS

DEADFRONT SWITCHGEAR
612 VAULT DETAIL
USE WITH STANDARD USG2

REVISIONS			
R	DATE	ENGR	OPS
1	1/11/04	LB	AH
2	10/7/05	LB	AH
3	12/5/19	CM	GM
4	9/16/21	JDK	

PAGE:		CAD FILE:	APP: HWH/MA	SECTION
2 of 6	USG3	USG3	DATE: 2/22/00	1600

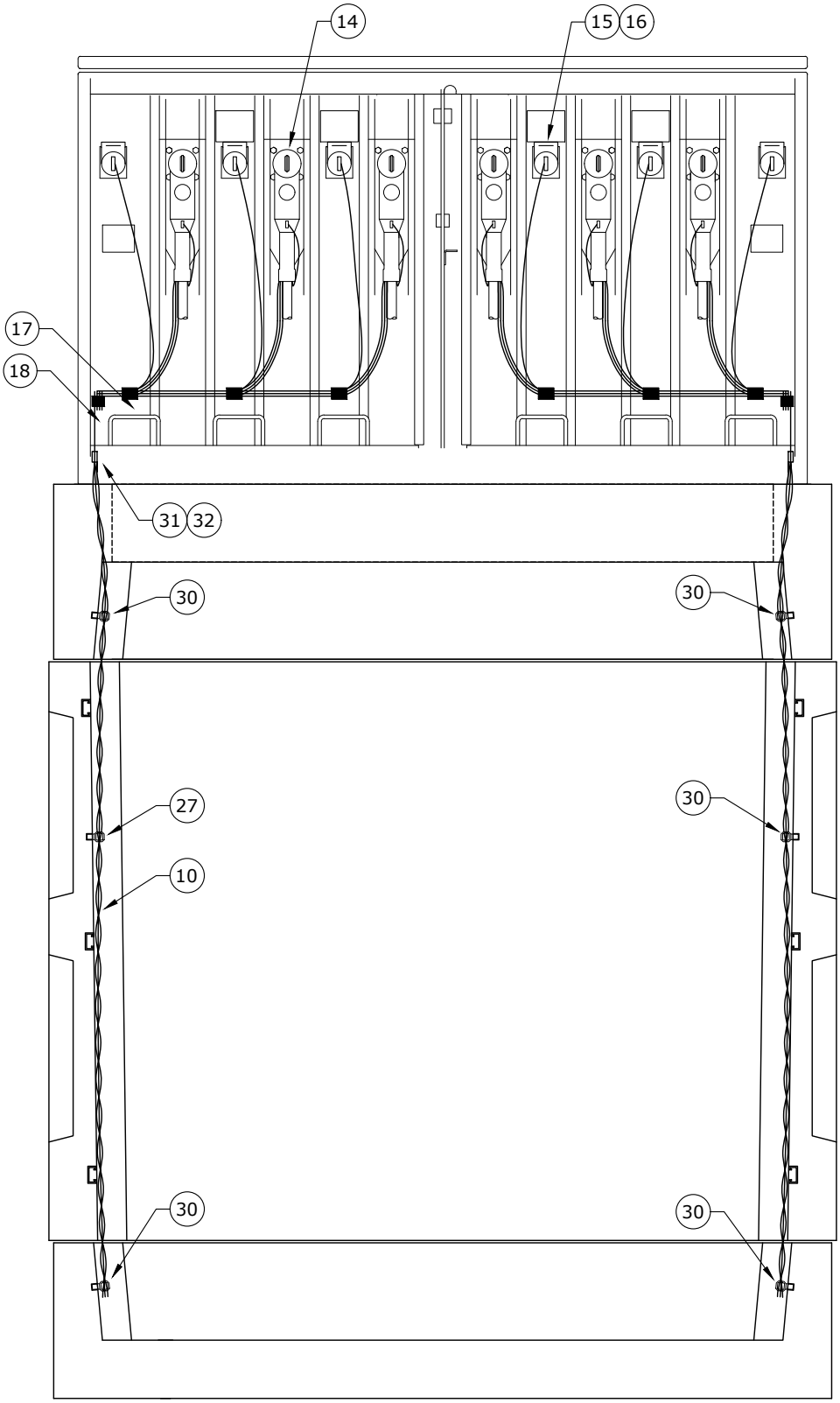

200A Elbow Detail

Rev. 4 - Fixed stock number in Note 4 for temporary lid.

Clark Public Utilities

CONSTRUCTION STANDARDS

DEADFRONT SWITCHGEAR
612 VAULT DETAIL
USE WITH STANDARD USG2

REVISIONS			
R	DATE	ENGR	OPS
1	1/11/04	LB	AH
2	10/7/05	LB	AH
3	12/5/19	CM	GM
4	9/16/21	JDK	

PAGE:		CAD FILE:	APP: HWH/MA	SECTION
3 of 6	USG3	USG3	DATE: 2/22/00	1600

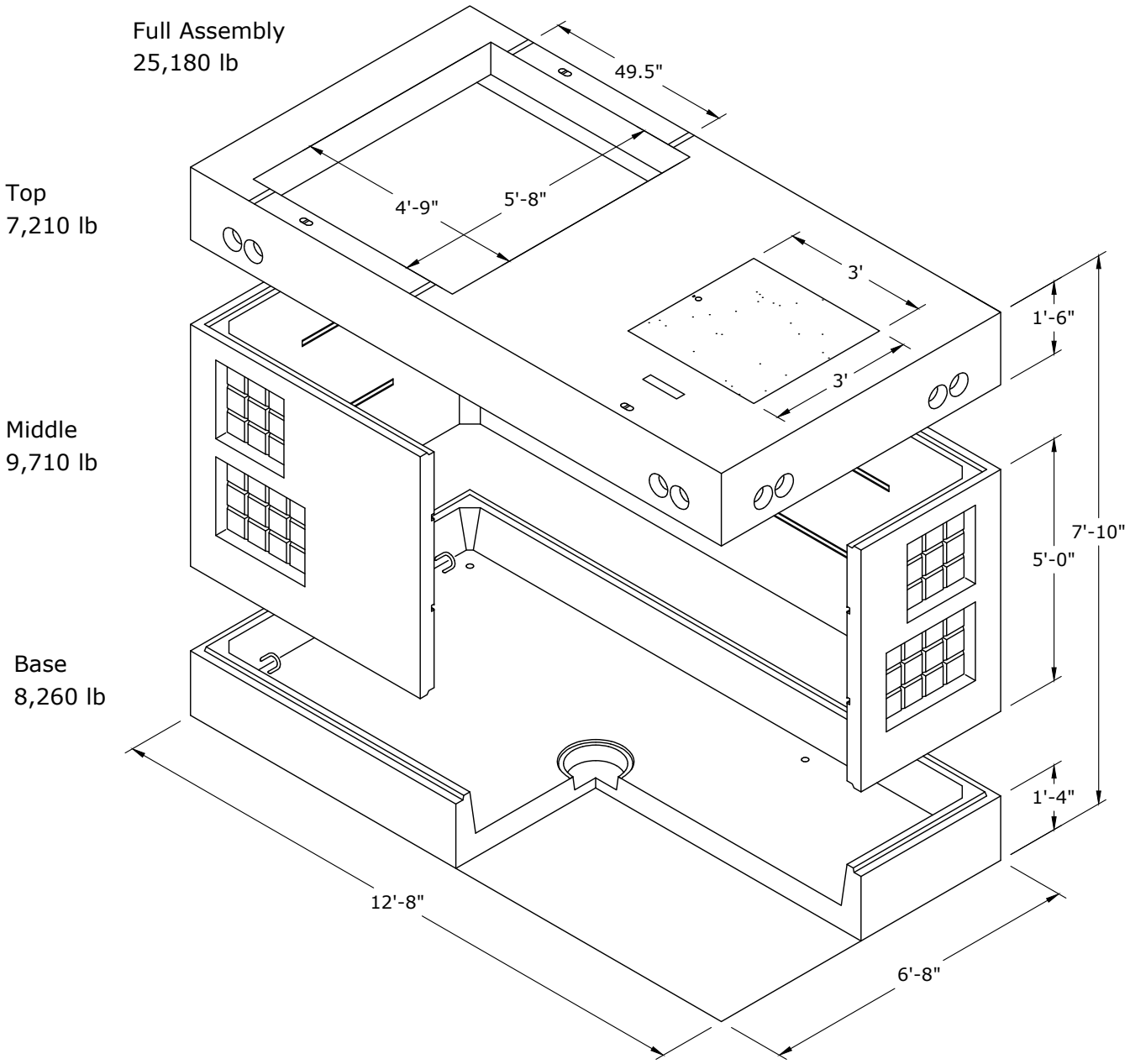

SIDE VIEW

Rev. 4 - Fixed stock number in Note 4 for temporary lid.

Clark Public Utilities

CONSTRUCTION STANDARDS

DEADFRONT SWITCHGEAR
612 VAULT DETAIL
USE WITH STANDARD USG2

REVISIONS

R	DATE	ENGR	OPS
1	1/11/04	LB	AH
2	10/7/05	LB	AH
3	12/5/19	CM	GM
4	9/16/21	JDK	

PAGE: 4 of 6

USG3

CAD FILE: USG3

APP: HWH/MA
DATE: 2/22/00

SECTION 1600

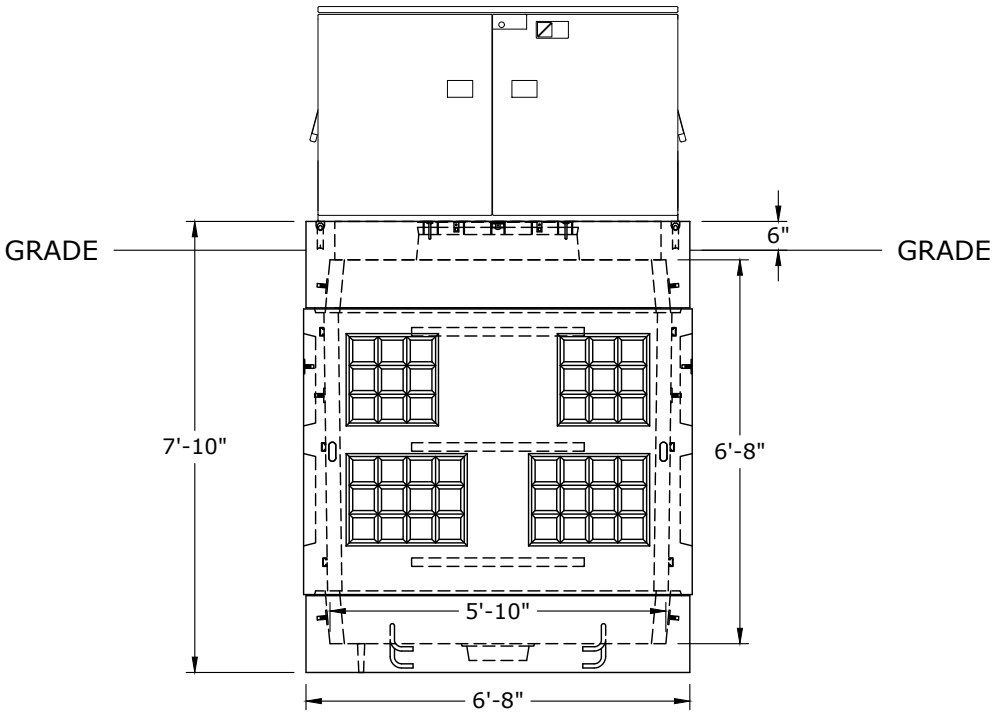

End View

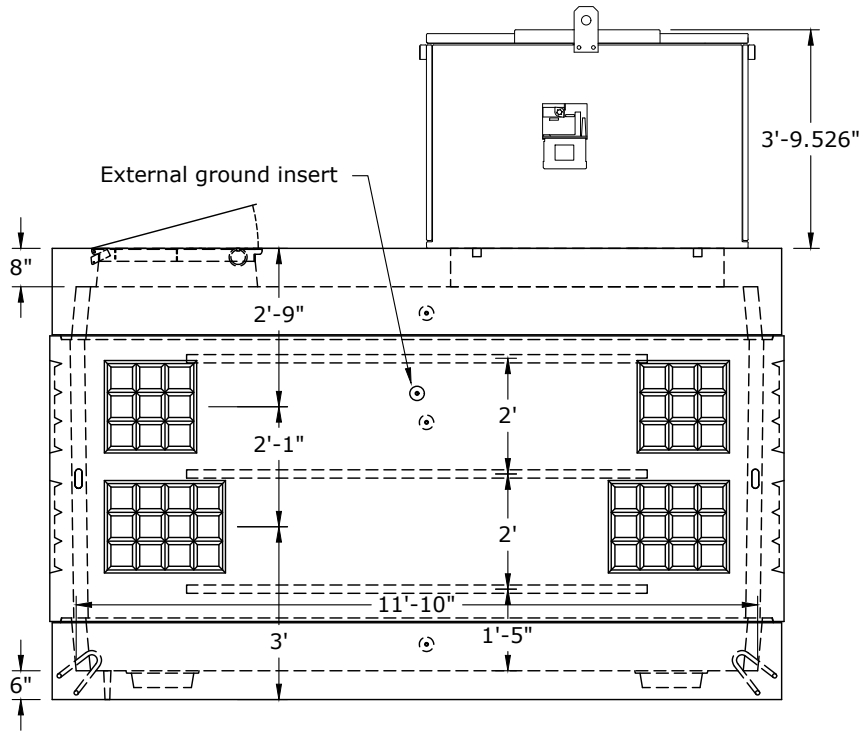

SIDE VIEW

Rev. 4 - Fixed stock number in Note 4 for temporary lid.

Clark Public Utilities

CONSTRUCTION STANDARDS

DEADFRONT SWITCHGEAR
612 VAULT DETAIL
USE WITH STANDARD USG2

REVISIONS

R	DATE	ENGR	OPS
1	1/11/04	LB	AH
2	10/7/05	LB	AH
3	12/5/19	CM	GM
4	9/16/21	JDK	

PAGE: 5 of 6

USG3

CAD FILE: USG3

APP: HWH/MA
DATE: 2/22/00

SECTION 1600

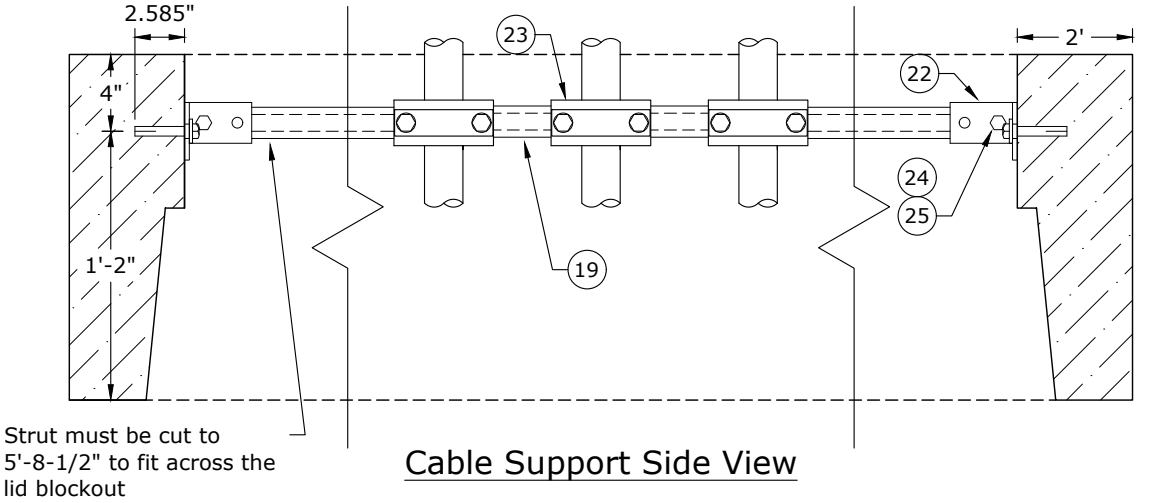

Cable Support Side View

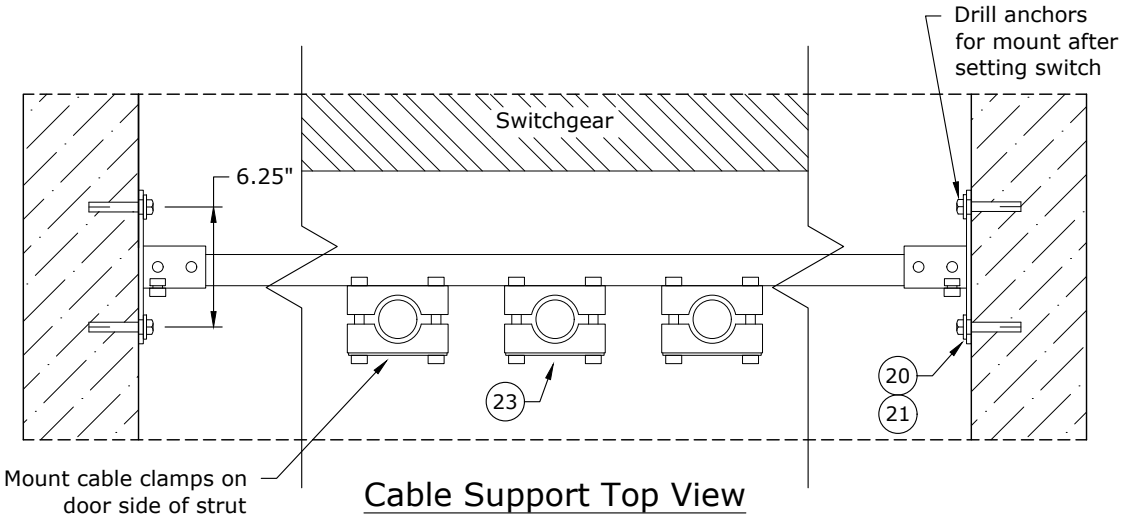

Cable Support Top View

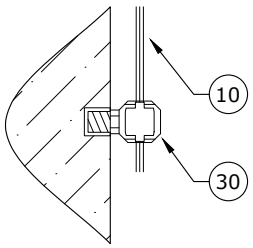

UFER Ground Connection

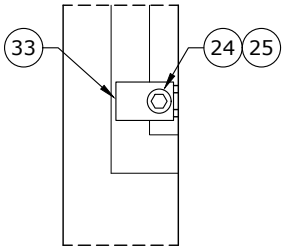

Switchgear to Vault Anchoring Detail

Rev. 4 - Fixed stock number in Note 4 for temporary lid.

ITEM NO.	DESCRIPTION	USG3	
		QTY	S/N
26	Vault, w/ Lid, 612-3LA, Ufer Ground, for PME Switchgear	1	2957
27	Rack, Cable, 30"	8	2861
28	Hook, Cable Rack, 18"	16	2863
29	Tie Wrap, Plastic, Releasable, 1/2" W x 19" L	36	2956
30	Lug, Grounding, #8 Sol - 2/0 Str, 4-Way	6	842
31	Connector, Compression Lug, Cu, 2/0 Str	4	431
32	Bolt, Washer, SS, 1/2" x 2" Assembly, w/ Si Br Nut	4	1389
33	Washer, 2" x 3" x 3/16" with 9/16" Slotted Hole	4	1415

Clark Public Utilities

CONSTRUCTION STANDARDS

DEADFRONT SWITCHGEAR
612 VAULT DETAIL
USE WITH STANDARD USG2

REVISIONS

R	DATE	ENGR	OPS
1	1/11/04	LB	AH
2	10/7/05	LB	AH
3	12/5/19	CM	GM
4	9/16/21	JDK	

PAGE: 6 of 6

USG3

CAD FILE: USG3

APP: HWH/MA

DATE: 2/22/00

SECTION 1600

FOR MAINTENANCE ONLY OR
WHEN STD USG3 VAULT WILL NOT FIT

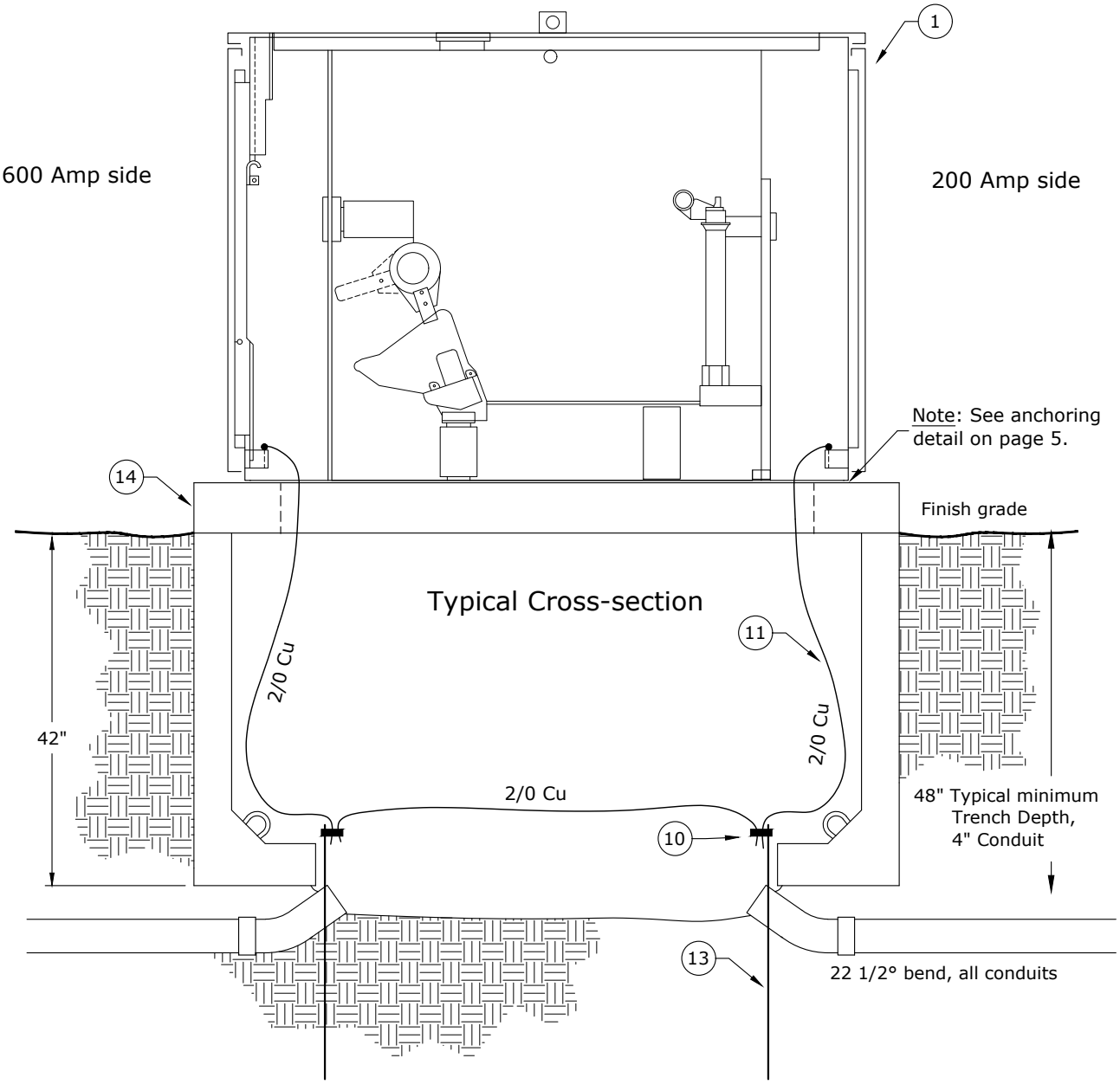

Notes:
1. Std USG3 is the preferred vault standard for PME switchgear.
2. Install 2 ground rods and 2/0 Cu bus loop around vault & bond to switchgear case in opposite corners.
3. Remote indicator for fault indicator is to be installed in the upper hinged-side of door of compartment with indicator.

Rev. 2 - Combined USG 5, 6, & 7, changed to maintenance or where 612 vault does not fit & added material issue.

Clark Public Utilities

CONSTRUCTION STANDARDS

DEADFRONT SWITCHGEAR ON 774 VAULT
FOR MAINTENANCE ONLY
OR WHEN STD USG3 VAULT WILL NOT FIT

REVISIONS

R	DATE	ENGR	OPS
1	1/11/04	LB	AH
2	8/8/22	CRM	GM

PAGE: 1 of 6

USG5

CAD FILE: USG5

APP: HWH/MA
DATE: 11/94

SECTION 1600

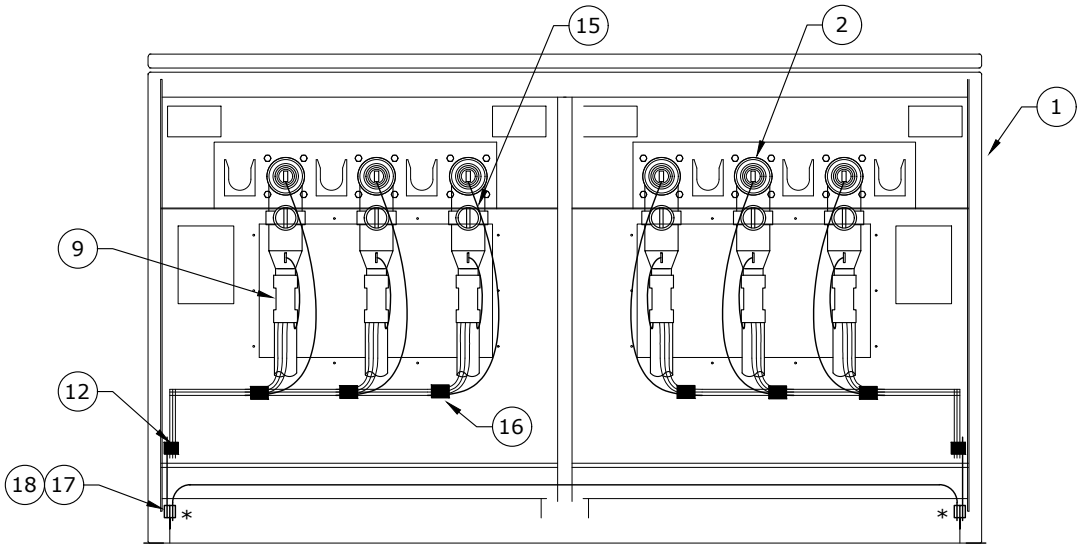

600A Elbow Detail

*Note: Bond concentric neutrals from cable to 2/0 Cu ground. Leave enough slack to move elbows.

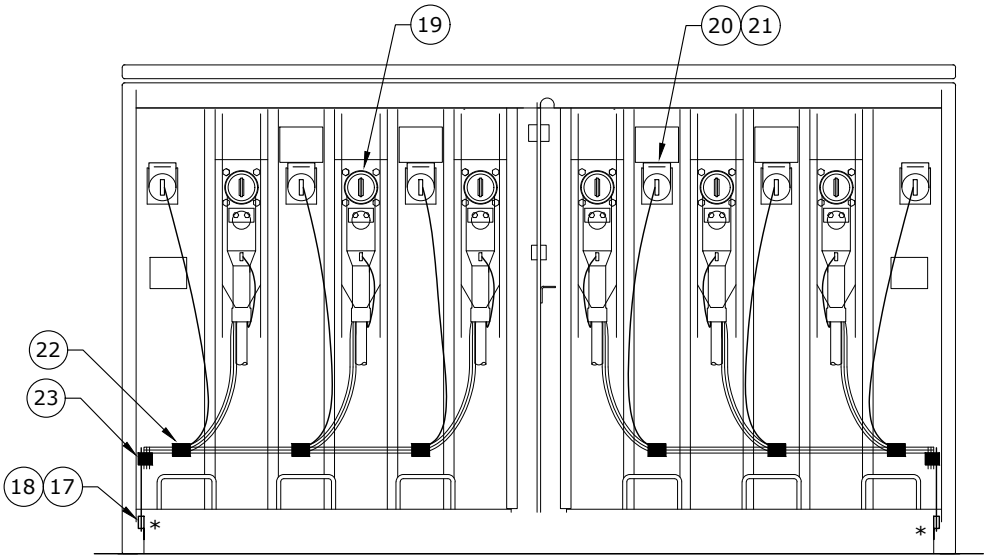

200A Elbow Detail

Rev. 2 - Combined USG 5, 6, & 7, changed to maintenance or where 612 vault does not fit, and added material issue.

Clark Public Utilities

CONSTRUCTION STANDARDS

DEADFRONT SWITCHGEAR ON 774 VAULT
FOR MAINTENANCE ONLY
OR WHEN STD USG3 VAULT WILL NOT FIT

REVISIONS

R	DATE	ENGR	OPS
1	1/11/04	LB	AH
2	8/8/22	CRM	GM

PAGE: 2 of 6

USG5

CAD FILE: USG5

APP: HWH/MA

DATE: 11/94

SECTION 1600

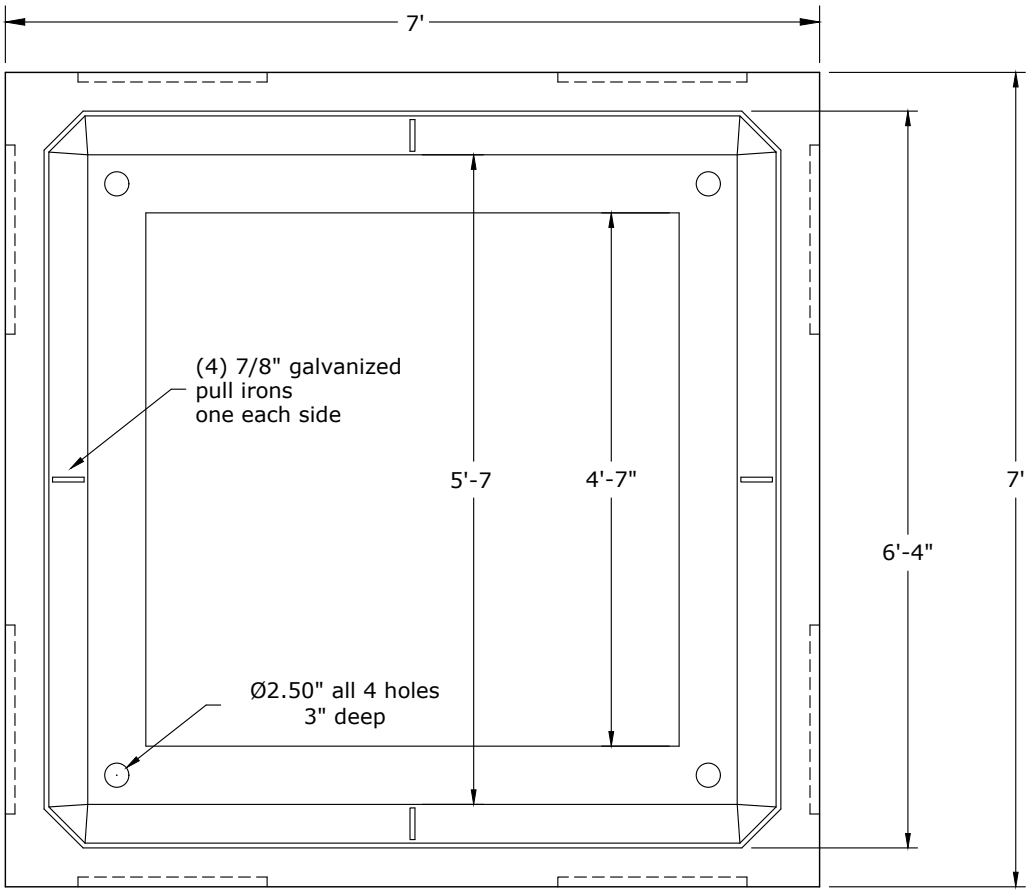

Top View (Vault Base)

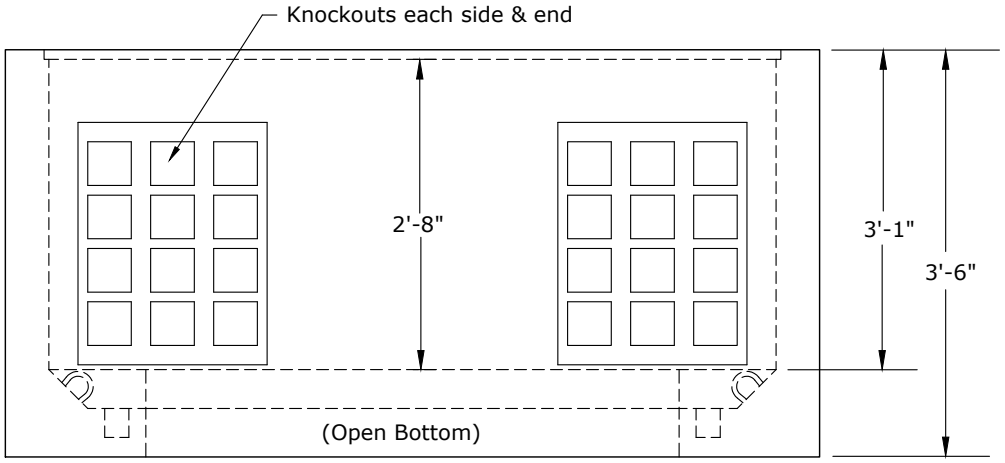

Front View (Vault Base)

Base Weight - 6,040 lb

Rev. 2 - Combined USG 5, 6, & 7, changed to maintenance or where 612 vault does not fit, and added material issue.

Clark Public Utilities

CONSTRUCTION STANDARDS

DEADFRONT SWITCHGEAR ON 774 VAULT
FOR MAINTENANCE ONLY
OR WHEN STD USG3 VAULT WILL NOT FIT

REVISIONS

R	DATE	ENGR	OPS
1	1/11/04	LB	AH
2	8/8/22	CRM	GM

PAGE: 3 of 6

USG5

CAD FILE: USG5

APP: HWH

DATE: 11/94

SECTION 1600

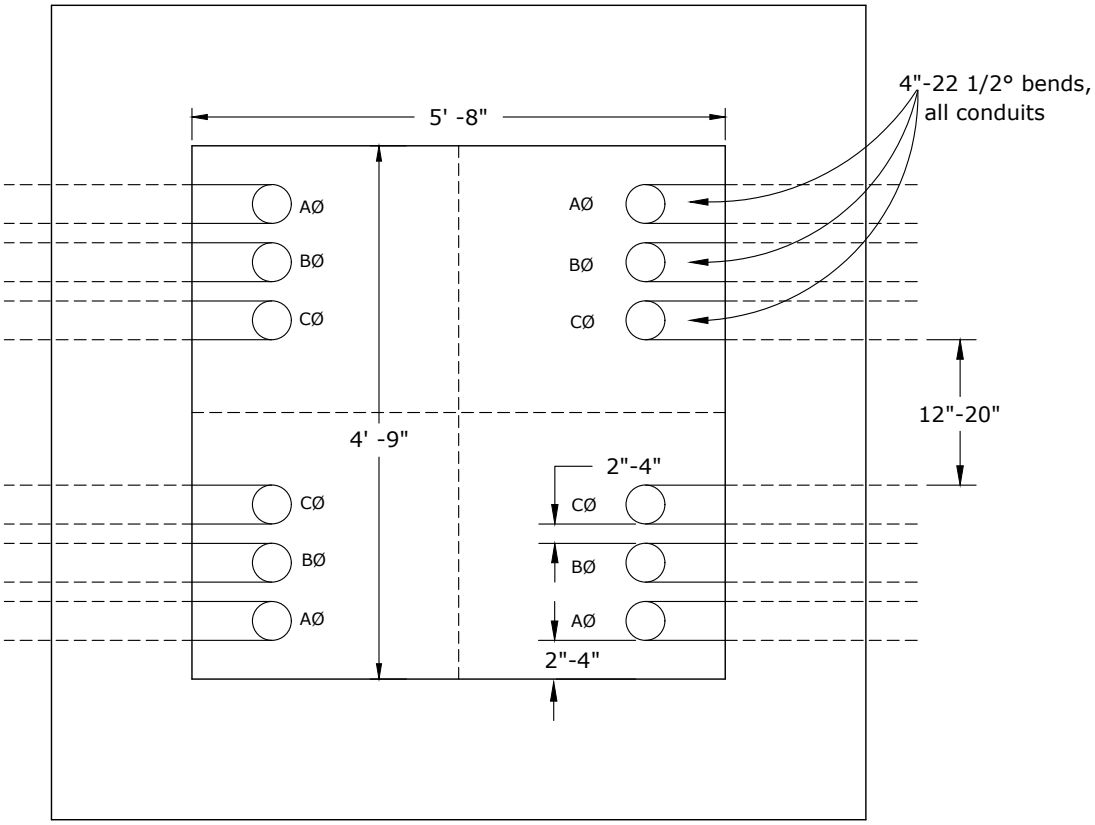

Top View

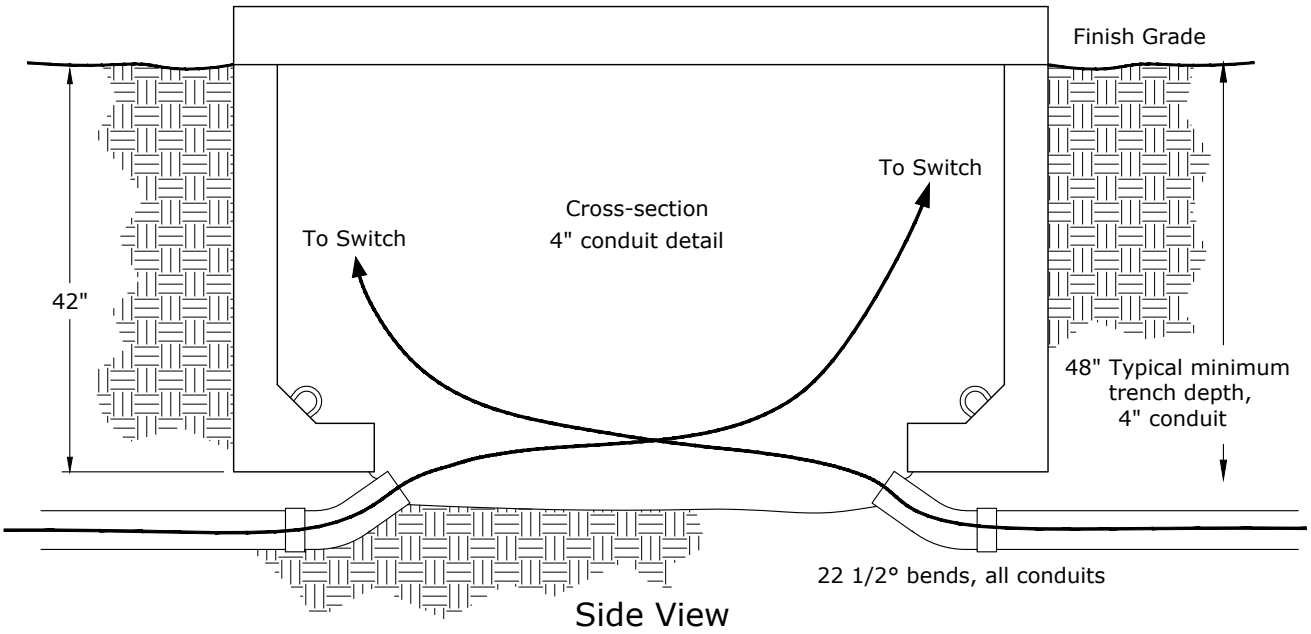

Side View

Rev. 2 - Combined USG 5, 6, & 7, changed to maintenance or where 612 vault does not fit, and added material issue.

Clark Public Utilities

CONSTRUCTION STANDARDS

DEADFRONT SWITCHGEAR ON 774 VAULT
FOR MAINTENANCE ONLY
OR WHEN STD USG3 VAULT WILL NOT FIT

REVISIONS

R	DATE	ENGR	OPS
1	1/11/04	LB	AH
2	8/8/22	CRM	GM

PAGE: 4 of 6

USG5

CAD FILE: USG5

APP: HWH/MA

DATE: 11/94

SECTION 1600

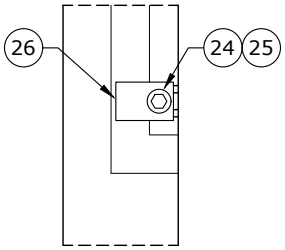

Switchgear to
Vault Anchoring Detail

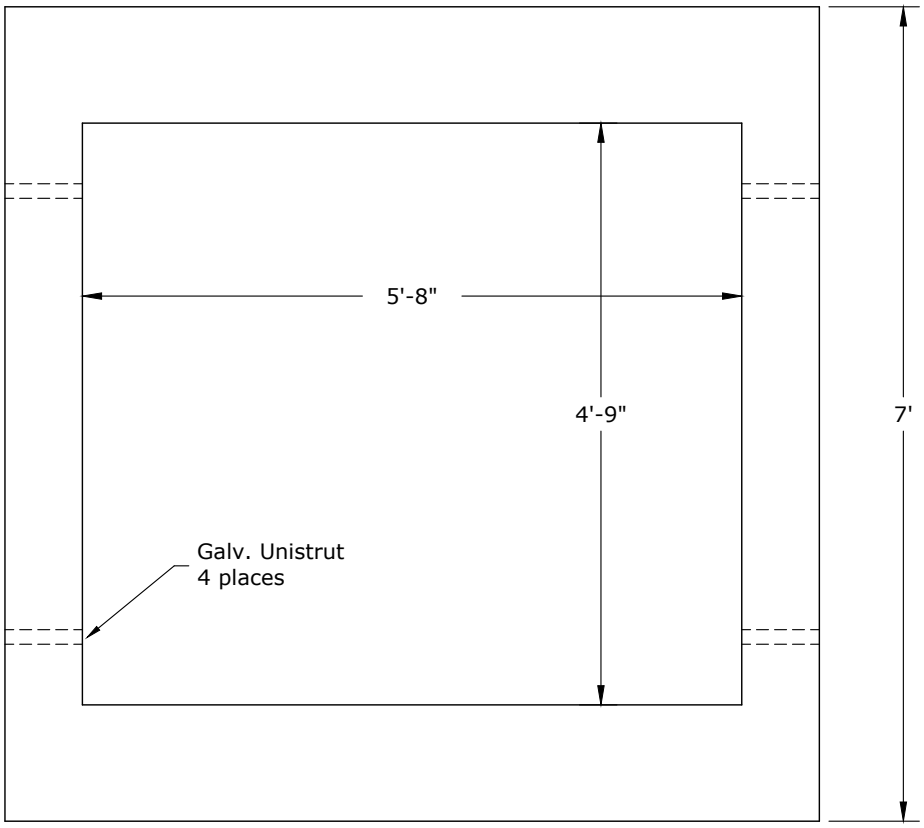

Top View (Vault Lid)

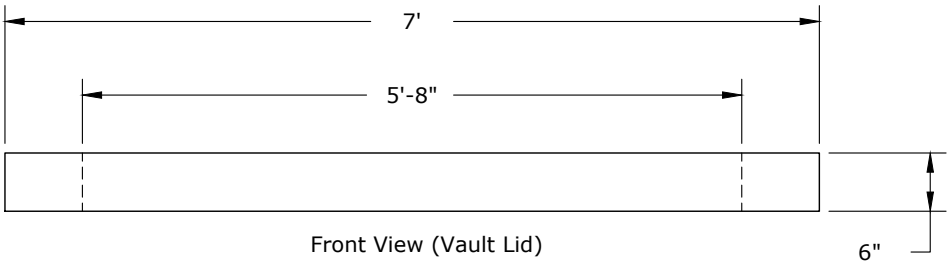

Front View (Vault Lid)

Lid Weight - 2,740 lb

Rev. 2 - Combined USG 5, 6, & 7, changed to maintenance or where 612 vault does not fit, and added material issue.

Clark Public Utilities

CONSTRUCTION STANDARDS

DEADFRONT SWITCHGEAR ON 774 VAULT
FOR MAINTENANCE ONLY
OR WHEN STD USG3 VAULT WILL NOT FIT

REVISIONS

R	DATE	ENGR	OPS
1	1/11/04	LB	AH
2	8/8/22	CRM	GM

PAGE: 5 of 6

USG5

CAD FILE: USG5

APP: HWH

DATE: 11/94

SECTION 1600

ITEM NO.	DESCRIPTION	S/N	7PME9 QTY	7PME10 QTY	7PME11 QTY	7PME12 QTY
1	Switch, Padmt, PME 9, 2-600 A Switches & 2-200 A Fused Bays	2458	1	–	–	–
	PME 10, 4-600 A Switches	2452	–	1	–	–
	PME 11, 3-600 A Switches & 1-200 A Fused Bay	2459	–	–	1	–
	PME 12, 1-600 A Switch & 3-200 A Fused Bays	Contact Standards Engineer - Not Stocked				
2	Elbow, 600A, NLB, Test Point, Kit For USG1	2692	6	12	9	3
	Each Kit Consists Of #3 to #8:					
3	*Elbow, 600 A, T-body*	1825	6	12	9	3
4	*Adapter, Cable, 1000 MCM*	1	6	12	9	3
5	*Contact, Compression, Al, 1000 MCM, Non-Threaded Hole*	941	6	12	9	3
6	*Plug, Loadbreak, Reducing Tap, 600A-200A*	1769	6	12	9	3
7	*Cap, Protective, Insulated, 200A, 15 kV*	265	6	12	9	3
8	*Stud, Al, 600A, T-body to Reducer Plug*	2704	6	12	9	3
9	Elbow, Sealing Kit, 1000MCM, 175mil & 220mil	2376	6	12	9	3
10	Clamp, Ground Rod, 5/8" Bronze, Large	282	2	2	2	2
11	Conductor, OH, Cu, 2/0, 7-Str, Bare, Soft Drawn, 1C	379	50	50	50	50
12	Connector, Crimpet, Cu, Run & Tap 1/0 - 2/0 Str	457	2	4	3	1
13	Rod, Ground, 5/8" x 8'	1124	2	2	2	2
14	Vault, Concrete, with Lid, 774, PME Switchgear	1541	1	1	1	1
15	Indicator, Fault, UG, 800A, Test-Point, Voltage-Reset, 3 phase	2695	1	3	2	–
16	Connector, Crimpet, Cu, Run 3/0 - 250 Str, Tap #6 Sol - 2/0 Str	459	6	12	9	3
17	Connector, Compression Lug, Cu, 2/0 Str	431	4	4	4	4
18	Bolt, Hexhead, SS, 1/2" x 2" Assembly, w/ Belleville & Flat Washers	1389	4	4	4	4
19	Elbow, 200A, LB, 1/0, 175 & 220 mil, Test Point, 15 kV, Jacket Seal	1312	6	-	3	9
20	Cap, Protective, Insulated, 200A 15 kV	265	6	-	3	9
21	Bushing, Standoff, Insulated, 200A	252	6	-	3	9
22	Connector, Crimpet, Cu, Run & Tap #2 Sol/Str (2C2)	455	6	-	3	9
23	Connector, Crimpet, Cu, Run 1/0 - 2/0 Str, Tap #8 Sol - #2 Str	456	2	-	1	3
24	Bolt, Machine, 1/2' x 1", (304) Stainless Steel	130	4	4	4	4
25	Nut, Spring-Loaded, Galv, 1/2" (Unistrut)	920	4	4	4	4
26	Washer, 2" x 3" x 13/16" w/ 9/16" Slotted Hole	1415	4	4	4	4

Additional Material If Needed

Description	S/N
Lid Only for Vault, Concrete, 774, PME Switchgear	1541B
Cover, Vault, 71" x 77", Fiberglass (Temp Only)	2495

Notes: 1. Material issue has the maximum number of fault indicators that may be used. Engineer to determine the actual number needed.
2. All new PMEs are ordered with the required number of 100E fuses for the configuration plus 3 spare fuses.
3. If 65E or 125E fuses are required, the Engineer will have to call for the number needed plus 3 spares.
4. Contact Systems Engineering for proper fuse coordination.

FUSE SIZE	S/N
65 E	661
100 E	662
125 E	663

Rev. 2 - Combined USG 5, 6, & 7, changed to maintenance or where 612 vault does not fit, and added material issue.

Clark Public Utilities

CONSTRUCTION STANDARDS

DEADFRONT SWITCHGEAR ON 774 VAULT
FOR MAINTENANCE ONLY
OR WHEN STD USG3 VAULT WILL NOT FIT

REVISIONS

R	DATE	ENGR	OPS
1	1/11/04	LB	AH
2	8/8/22	CRM	GM

USG5

CAD FILE: USG5

APP: HWH/MA
DATE: 11/94

SECTION 1600

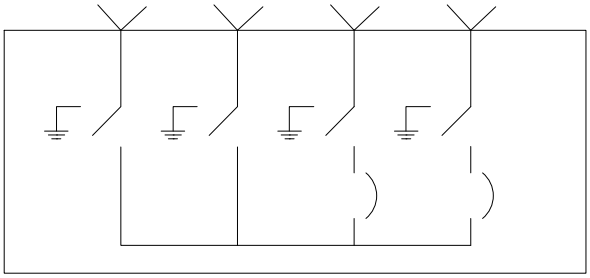

S/N 2910 - Model 422

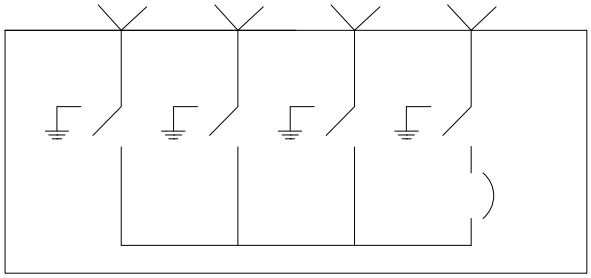

S/N 2911 - Model 431

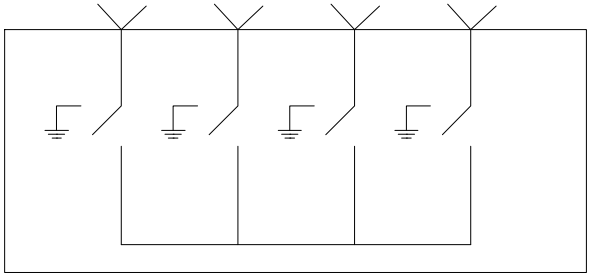

S/N 2924 - Model 440

BELOW GRADE SWITCH MODEL	S/N	600 AMP 3ø SWITCH	200 AMP 3ø FUSED POSITIONS
422	2910	2	2
431	2911	3	1
440	2924	4	0

ITEM NO.	DESCRIPTION	S/N	BG422 QTY	BG431 QTY	BG440 QTY
1	Switchgear, Below Grade, 422, 15kV, 12.5kA Isc	2910	1	–	–
	Switchgear, Below Grade, 431, 15kV, 12.5kA Isc	2911	–	1	–
	Switchgear, Below Grade, 440, 15kV, 12.5kA Isc	2924	–	–	1
2	Elbow, 600A, NLB, Test Point, Kit For USG1	2692	6	9	12
	Each Kit Consists Of Items #3 to #8:				
3	*Elbow, 600A, T-body*	1825	6	9	12
4	*Adapter, Cable, 1000 MCM*	1	6	9	12
5	*Contact, Compression, Al, 1000 MCM, Non-Threaded Hole*	941	6	9	12
6	*Plug, Loadbreak, Reducing Tap, 600A-200A*	1769	6	9	12
7	*Cap, Protective, Insulated, 200A, 15 kV*	265	12	12	12
8	*Stud, Al, 600A, T-body to Reducer Plug*	2704	6	9	12
9	Elbow, Sealing Kit, 1000MCM, 175 & 220 mil	2376	6	9	12
10	Connector, Crimpet, Cu, Run & Tap 3/0 to 4/0 Str	460	6	9	12
11	Elbow, 200A, LB, 1/0, 175 & 220 mil, Test Point, 15 kV, Jacket Seal	1312	6	3	-
12	Bushing, Feed-Thru, 200A, 15 kV	237	6	3	-
13	Connector, Crimpet, Cu, Run & Tap #2 Sol/Str (2C2)	455	6	3	-
14	Indicator, Fault, 400A, Test Point, Voltage Reset, 1Ø	2694	2	1	-
15	Indicator, Fault, 800A, Test Point, Voltage Reset, 3Ø	2695	1	2	3

Clark Public Utilities

CONSTRUCTION STANDARDS

BELOW GRADE SWITCHGEAR

USE WITH STANDARD USG9

REVISIONS			
R	DATE	ENGR	OPS

PAGE: 1 of 1

USG8

CAD FILE: USG8

APP: CRM/GM

DATE: 8/8/22

SECTION 1600

Note: Switch numbers and FB number labels are made by the warehouse. Labels are black on yellow and are 4" wide by 2" high. Systems Engineering assigns the numbers.

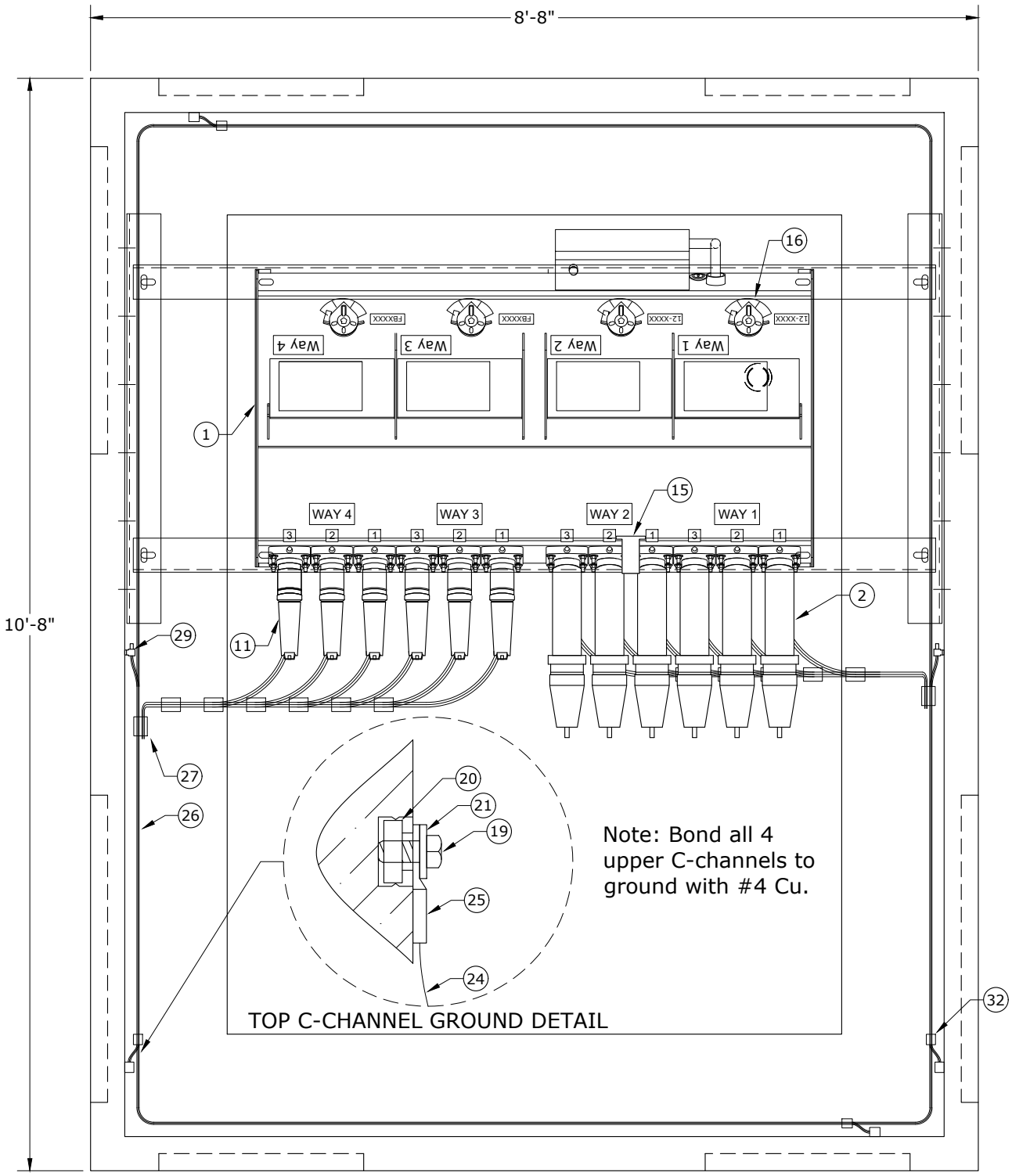

Grounding Detail Top View

Clark Public Utilities

CONSTRUCTION STANDARDS

BELOW GRADE SWITCHGEAR
VAULT DETAIL
USE WITH STANDARD USG8

REVISIONS			
R	DATE	ENGR	OPS

PAGE:		CAD FILE:	APP: CRM/GM	SECTION
1 of 7	USG9	USG9	DATE: 8/8/22	1600

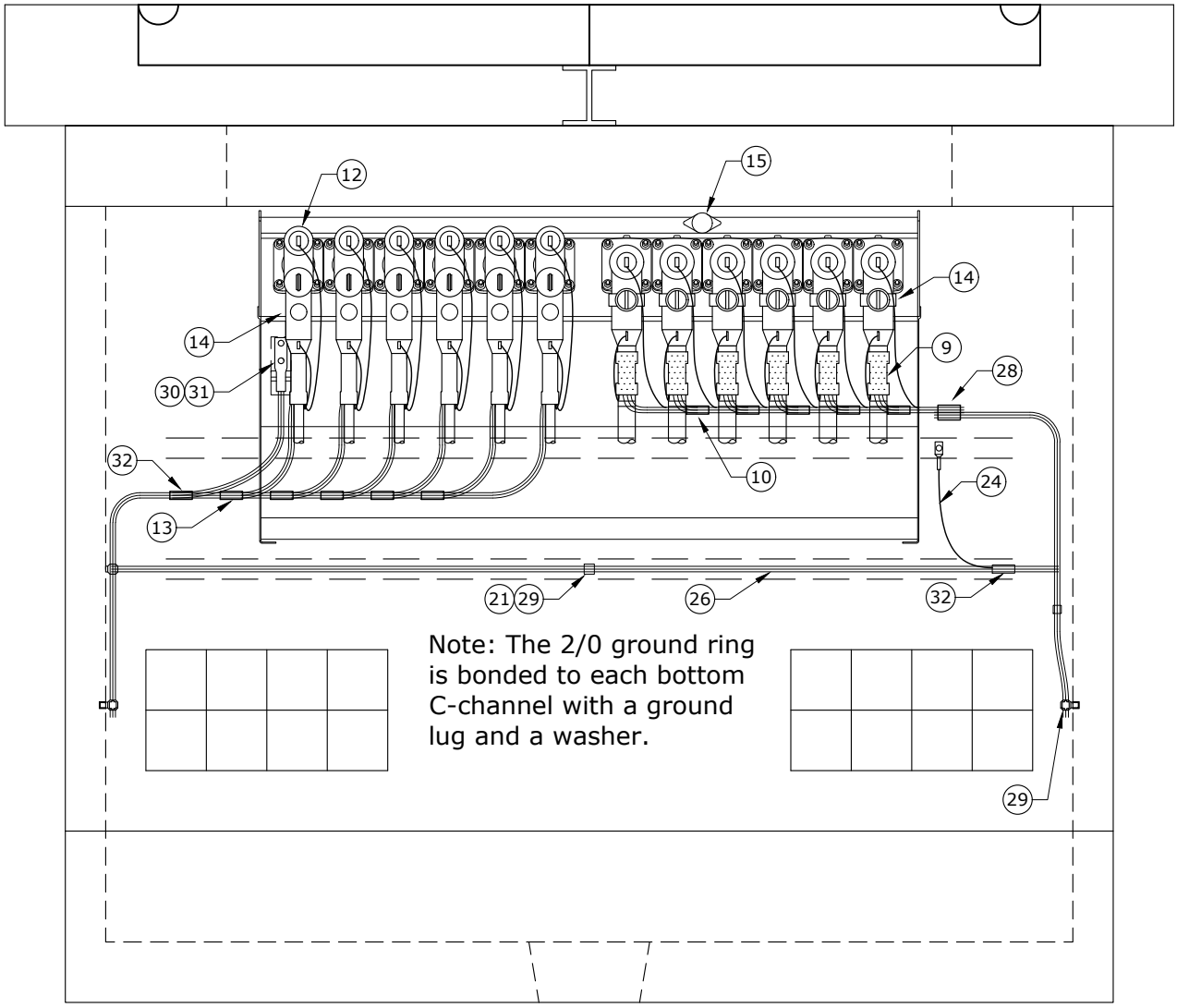

Grounding Detail Back View

Note: This drawing is for model 422. For all models, keep 200A elbow concentrics separate from 600A elbow concentrics.

Clark Public Utilities

CONSTRUCTION STANDARDS

BELOW GRADE SWITCHGEAR
VAULT DETAIL
USE WITH STANDARD USG8

REVISIONS			
R	DATE	ENGR	OPS

PAGE:		CAD FILE:	APP: CRM/GM	SECTION
2 of 7	USG9	USG9	DATE: 8/8/22	1600

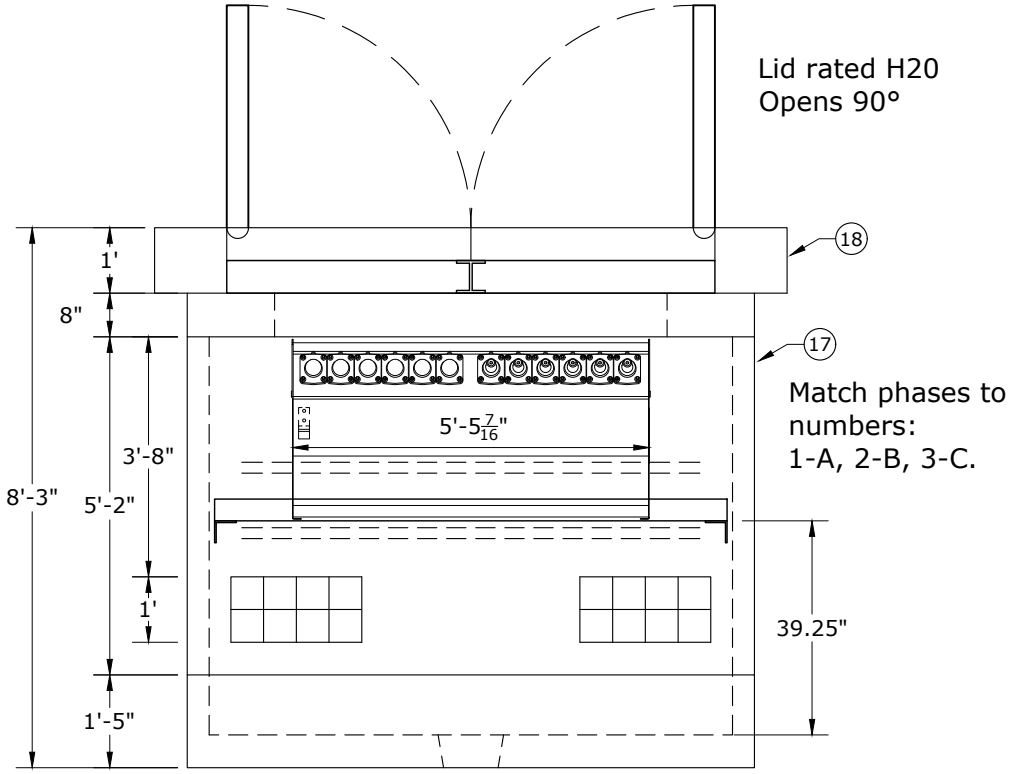

Back View

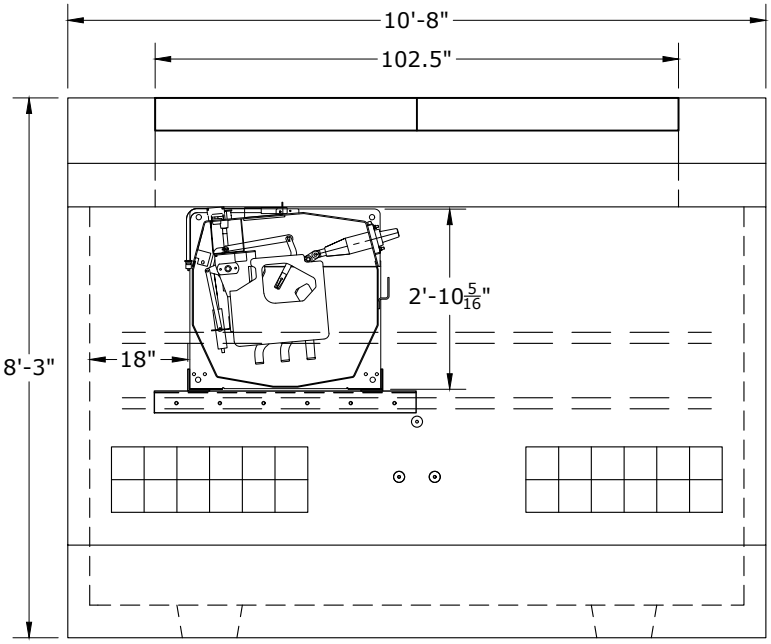

Side View

Notes:

1. Use the bottom outermost conduits first so that remaining vacant conduits are accessible for future cable pulling and orderly cable training. Seal vacant conduits with reusable expanding duct plugs (S/N 2943). Seal conduits with cable using inflatable seals (S/N 2944).
2. Install feed-thru bushings in each 200 A bushing well.

Clark Public Utilities

CONSTRUCTION STANDARDS

BELOW GRADE
VAULT DETAIL
USE WITH STANDARD USG8

REVISIONS			
R	DATE	ENGR	OPS

PAGE:		CAD FILE:	APP: CRM/GM	SECTION
3 of 7	USG9	USG9	DATE: 8/8/22	1600

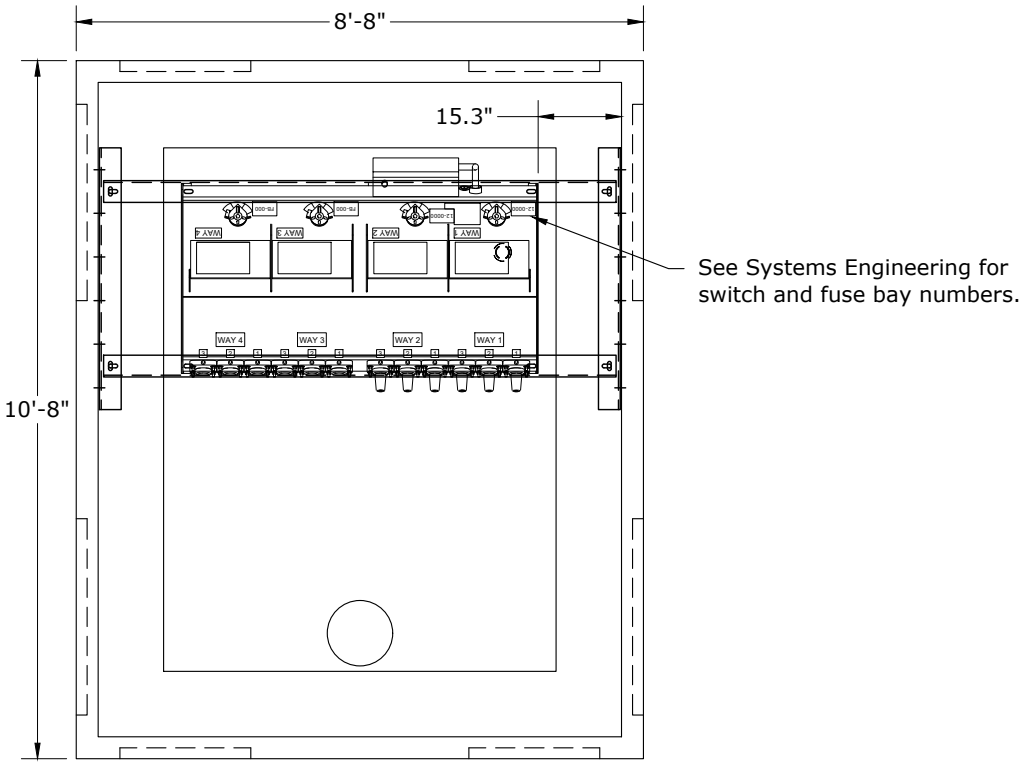

Vault Base With Switch

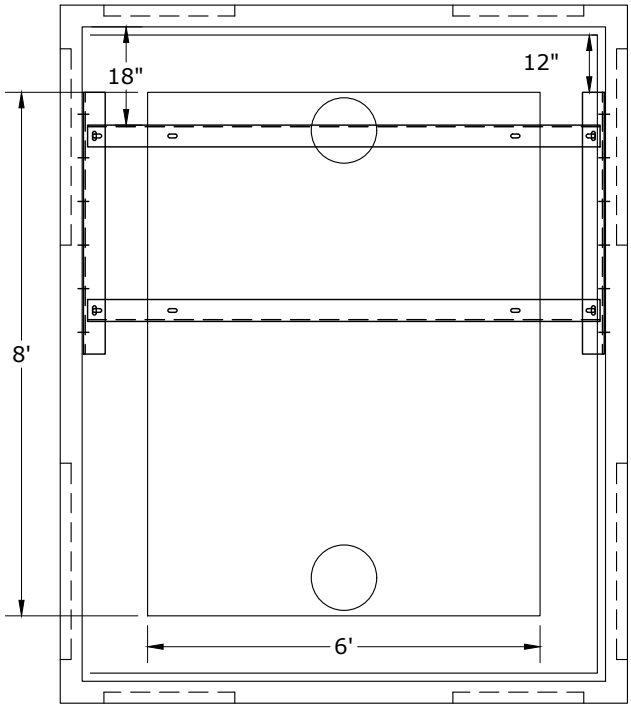

Vault Base Top View

Clark Public Utilities

CONSTRUCTION STANDARDS

BELOW GRADE SWITCHGEAR
VAULT DETAIL
USE WITH STANDARD USG8

REVISIONS			
R	DATE	ENGR	OPS

PAGE:		CAD FILE:	APP: CRM/GM	SECTION
4 of 7	USG9	USG9	DATE: 8/8/22	1600

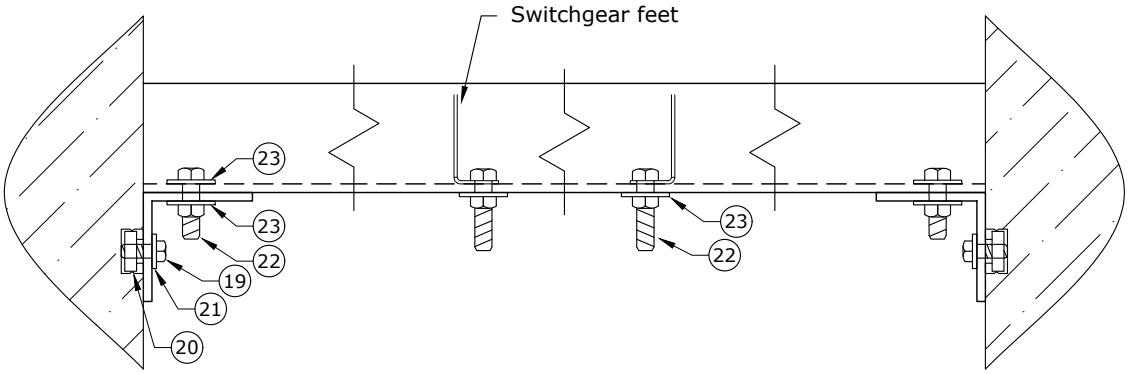

Switchgear Support Assembly

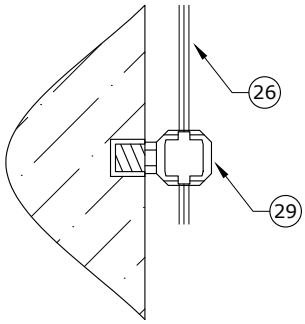

Ufer Ground Connection Detail

Clark Public Utilities

CONSTRUCTION STANDARDS

BELOW GRADE SWITCHGEAR
VAULT DETAIL
USE WITH STANDARD USG8

REVISIONS			
R	DATE	ENGR	OPS

PAGE:		CAD FILE:	APP: CRM/GM	SECTION
5 of 7	USG9	USG9	DATE: 8/8/22	1600

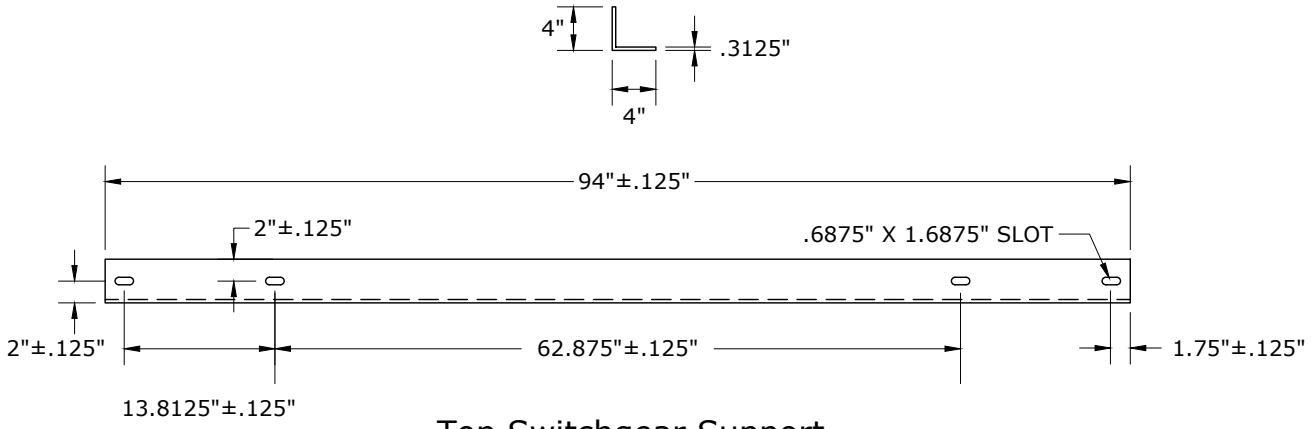

Top Switchgear Support

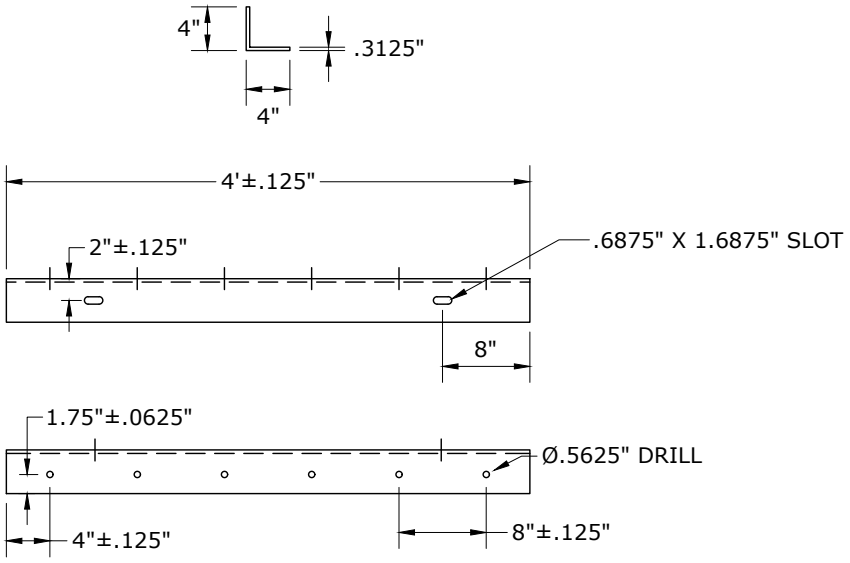

Bottom Switchgear Support

Notes:

1. These dimensions are for a Utility Vault 8'x10' with tapered walls.
2. These supports are not part of CPU inventory and must be fabricated at a machine shop.

Clark Public Utilities

CONSTRUCTION STANDARDS

BELOW GRADE SWITCHGEAR
VAULT DETAIL
USE WITH STANDARD USG8

REVISIONS			
R	DATE	ENGR	OPS

PAGE:		CAD FILE:	APP: CRM/GM	SECTION
6 of 7	USG9	USG9	DATE: 8/8/22	1600

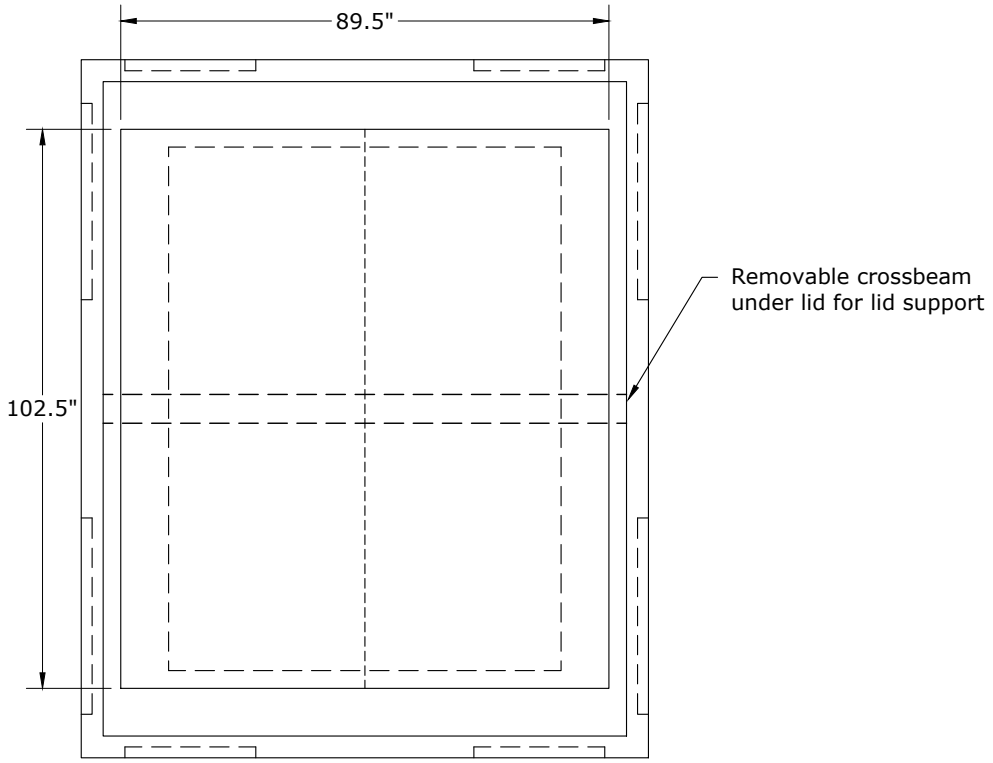

Top View With Lid

Note: See USG8 for items #1-16.

ITEM NO.	DESCRIPTION	USG9	
		QTY	S/N
17	Vault, 810. w/o Lid, Below Grade Switch	1	2793
18	Lid, (2) 3' x 8' Doors, 810 Vault, Below Grade Switch	1	2794
19	Bolt, Machine, 1/2" x 1-1/2" SS	12	131
20	Nut, Spring-Loaded Galv. 1/2"	16	920
21	Washer, Flat, 1/2", SS	20	2610
22	Bolt, Machine 5/8" x 2" Galv., 12,400 lbs Ultimate Tensile	8	149
23	Washer, Flat Round, Galv., 5/8"	16	1395
24	Conductor, OH, BSDC, #4, 1C 7 Str	35	377
25	Connector, Compression Lug, #4 Cu	8	2548
26	Conductor, OH, BSDC, 2/0, 1C 7 Str	60	379
27	Connector, Crimpet, Cu, 2/0 to 2/0	6	457
28	Connector, Crimpet, Cu, 2/0 to 4/0	1	459
29	Lug, Grounding, #8 SLD - 2/0 Str 4 Way	6	842
30	Connector, Compression Lug, Cu 2/0 Str	1	431
31	Bolt, Washer, SS, 1/2" x 2" Assembly, w/ Si Br Nut	2	1389
32	Connector, Crimpet, Cu, 1/0-2/0 to #6-#2	6	456

Clark Public Utilities

CONSTRUCTION STANDARDS

BELOW GRADE SWITCHGEAR
VAULT DETAIL
USE WITH STANDARD USG8

REVISIONS			
R	DATE	ENGR	OPS

PAGE: 7 of 7

USG9

CAD FILE: USG9

APP: CRM/GM
DATE: 8/8/22

SECTION 1600

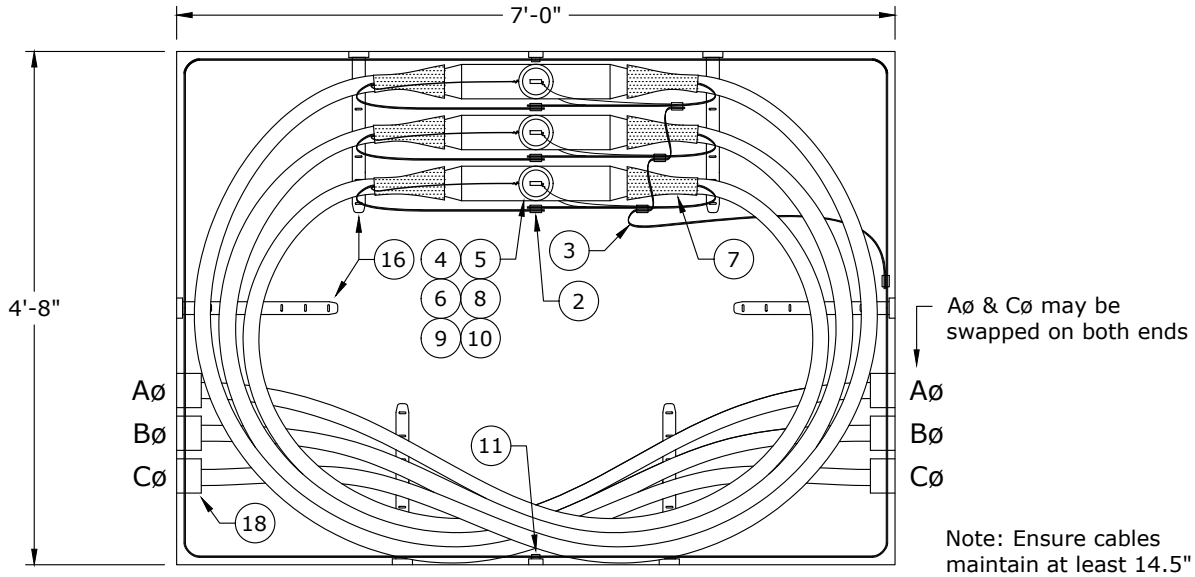

Note: CO2 cartridges for seals (#18) are in free issue.
Inflation tool is in Tool Room.

Top View

Note: Ensure cables maintain at least 14.5" minimum bend radius

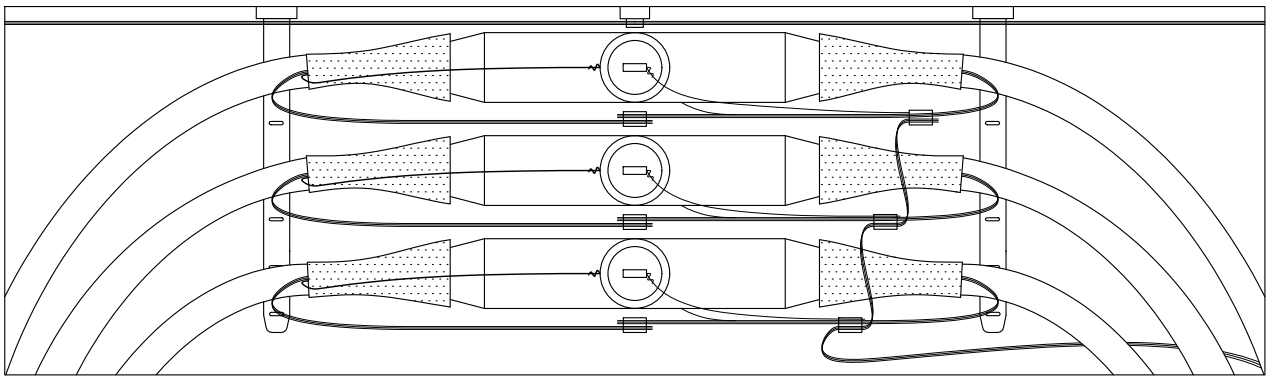

Grounding Detail

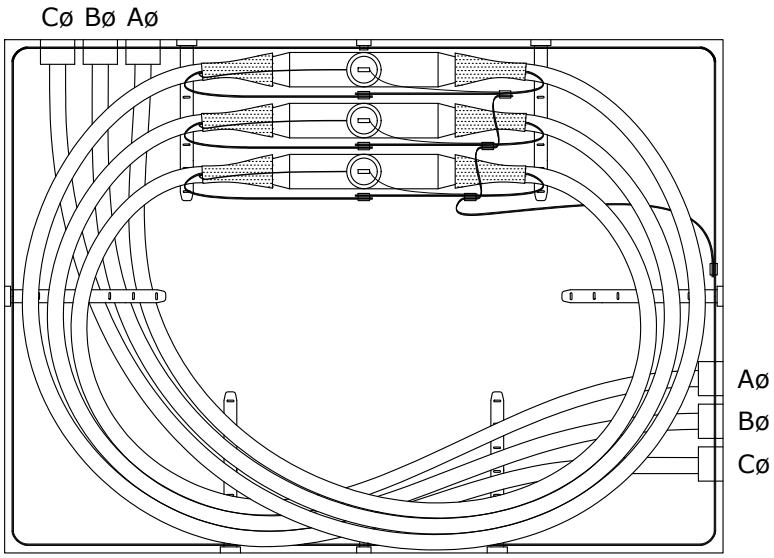

Alternate Configuration

Clark Public Utilities

CONSTRUCTION STANDARDS

1000MCM SPLICE PIT
FLUSH-MOUNT

REVISIONS			
R	DATE	ENGR	OPS

PAGE:		CAD FILE:	APP: CRM/GM	SECTION
1 of 2	USP	USP	DATE: 8/8/22	1600

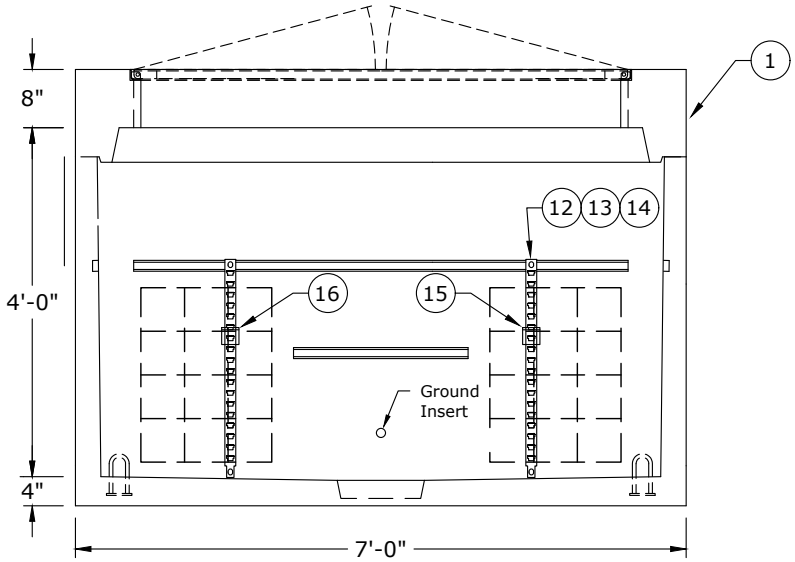

Front View (Inside)

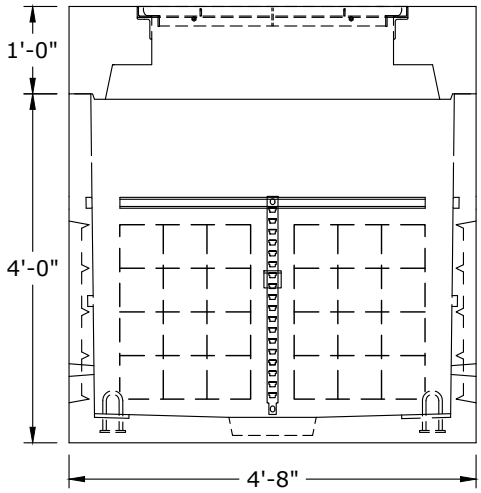

Side View (Inside)

ITEM NO.	DESCRIPTION	USP	
		QTY.	S/N
1	Vault, 575LA, Flush-Mount J-Box or EE, Ufer Ground, Non-Slip Lid	1	2722
2	Connector, Crimpet, Cu, Run & Tap 1/0 - 2/0 Str	7	457
3	Conductor, OH, Cu, 2/0, 7-str, Bare, Soft-Drawn, 1C	30	379
4	Extender, 1000MCM Cable	3	2766
5	Plug, Basic Insulating	3	1824
6	Contact, Compression, Al, 1000MCM, Non-Threaded Hole	6	941
7	Elbow, Sealing Kit, 1000MCM 175 & 220 Mil	6	2376
8	Adapter, Cable, 1000MCM	6	1
9	Plug, Loadbreak, Reducing Tap, 600A-200A	3	1769
10	Cap, Protective, Insulated, 200A	3	265
11	Lug, Grounding, #8 Sol - 2/0 Str, 4-Way	2	842
12	Bolt, Machine, 1/2" x 1-1/2" SS	6	131
13	Nut, Spring-Loaded, Galv, 1/2" (Uni-strut)	6	920
14	Washer, Flat, 1/2", 18-8, Stainless Steel	6	2610
15	Bracket, Mounting, Vault, 30"	6	2861
16	Arm, Vault, Cable, 18"	6	2863
17	Tie Wrap, Plastic, Releasable, 1/2" W x 19" L	21	2956
18	Seal, 4" Conduit, Inflatable (Up to 2 Cables)	6	2944

Clark Public Utilities

CONSTRUCTION STANDARDS

1000MCM SPLICE PIT
FLUSH-MOUNT

REVISIONS

R	DATE	ENGR	OPS

PAGE: 2 of 2

USP

CAD FILE: USP

APP: CRM/GM

DATE: 8/8/22

SECTION 1600