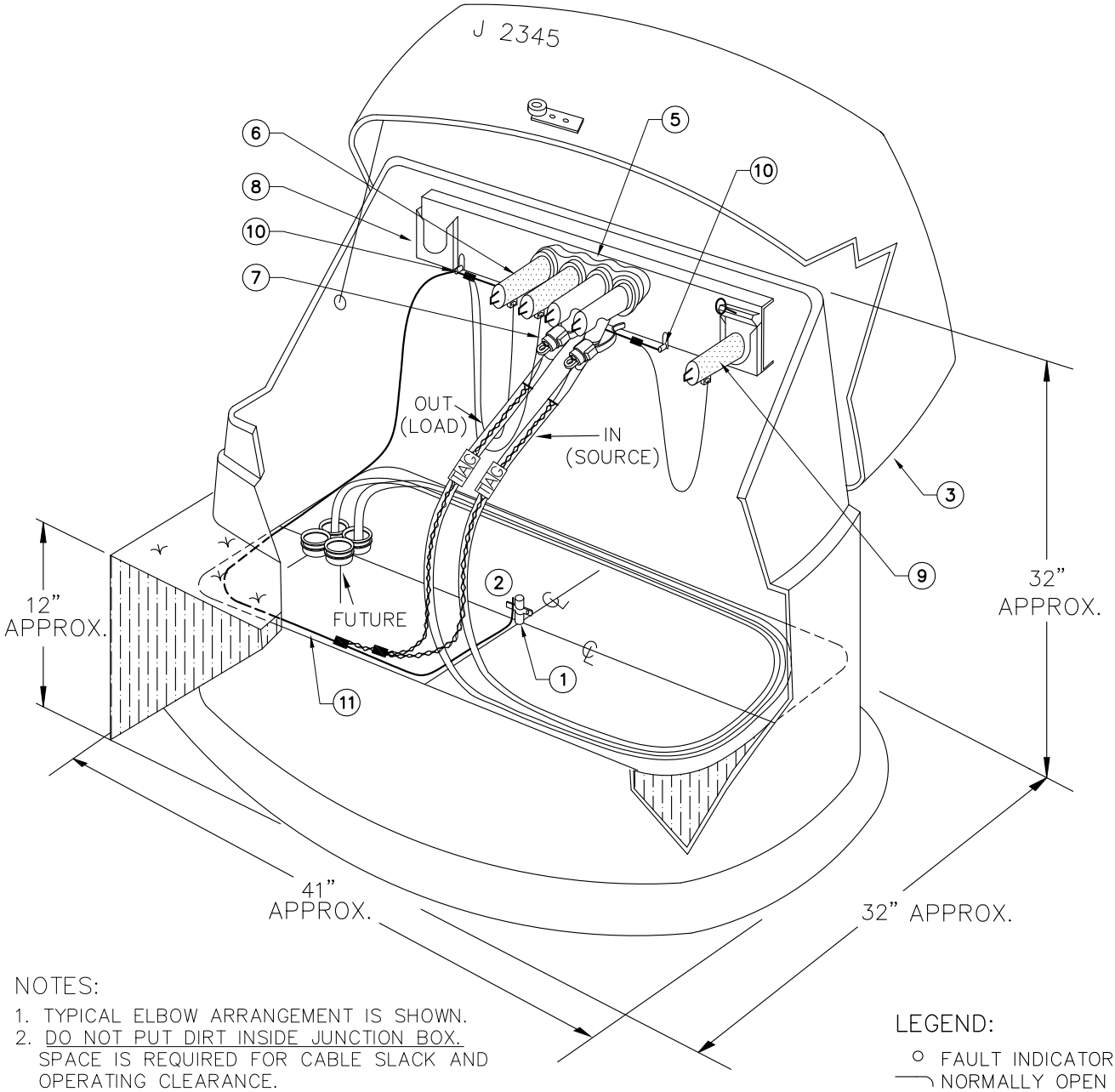

NOTES:

1. TYPICAL ELBOW ARRANGEMENT IS SHOWN.
2. DO NOT PUT DIRT INSIDE JUNCTION BOX. SPACE IS REQUIRED FOR CABLE SLACK AND OPERATING CLEARANCE.
3. LEAVE CABLE SLACK FOR FUTURE OPERATIONS.

LEGEND:

○ FAULT INDICATOR
NORMALLY OPEN (ON STANDOFF BRACKET)

Rev 4: Changed to Voltage-reset fault indicators and added equipment lock.

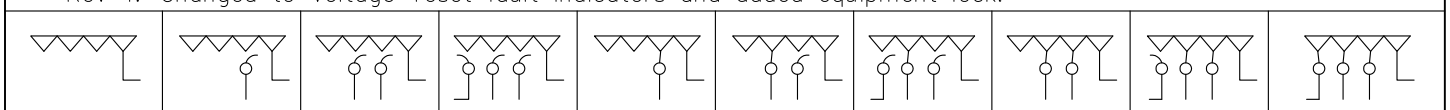

UJM4	UJM41	UJM42	UJM43	UJM44	UJM45	UJM46	UJM47	UJM48	UJM49

ITEM	MATERIAL LIST DESCRIPTION	QTY	S/N
1	Ground Rod 5/8" x 8'	1	1124
2	Clamp, Ground Rod 5/8", Small	1	281
3	Junction Box, 1ø	1	194
4	Equipment Lock, UG	1	837 ✲

Clark Public Utilities

CONSTRUCTION STANDARDS

PRIMARY JUNCTION BOX
SINGLE PHASE

PAGE:		CAD FILE:	
1 of 2	UJ1	UJ1	UJ1 Section 1500 - Clearances Last updated: 12/2012

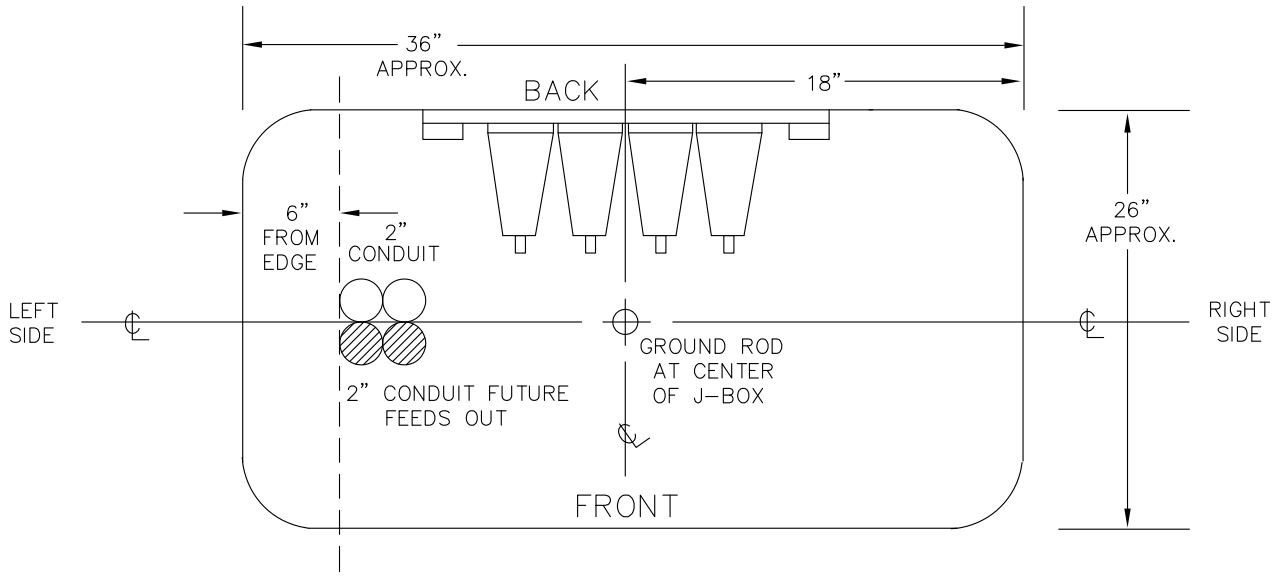

PLAN VIEW 1-PHASE J-BOX

Rev 4: Changed to Voltage-reset fault indicators and added equipment lock.

Clark Public Utilities

CONSTRUCTION STANDARDS

PRIMARY JUNCTION BOX
SINGLE PHASE

PAGE:		CAD FILE:	
2 of 2	UJ1	UJ1	UJ1 Section 1500 - Clearances Last updated: 12/2012